The Beam Line

Stanford Linear Accelerator Center

VOLUME 3, NO. 4 AUGUST 21, 1972

LBL-SLAC Cosmic Ray Experiment

by Steve Kociol

In the world's lexicon of subnuclear particles, only a few do not participate in the nuclear force, usually called the "strong interaction" by particle physicists. These are the members of the lepton family — the neutrinos, electrons, and muons. Physicists would be delighted to find a non-strongly interacting particle heavier than the muon (rest mass 106 MeV), but no such creature has shown up in accelerator experiments as yet, possibly because it, if it exists at all, might be too heavy to produce at current accelerator energies. Fortunately, Nature has provided us with her own high energy particle source, cosmic rays, and a number of experiments have been done using them.

One such experiment was recently completed by a SLAC-Lawrence Berkeley Laboratory collaboration in the SLAC research yard and involved the study of how the intensity of cosmic-ray-produced muons observed at sea level depends on the angle (the "zenith angle") with respect to the vertical at which a detector is placed. The pattern correlates in an intuitive way with the "parent" particle which produced the detected muon in the first place. An ensemble of as-yet unseen nonstrongly interacting particles would produce a very different pattern from that in which ordinary pi and K meson decay would result.

The analysis goes like this: the term cosmic radiation refers to those particles originating from stellar bodies, such as the sun, and accelerated to high energies (in excess of 100 MeV) by interstellar electromagnetic fields. About ninety percent of these particles are protons, the remainder being heavier nuclei. A reasonably steady flux of these particles enters the earth's atmoshere and some fraction of these interact with oxygen and nitrogen nuclei in the atmosphere. These collisions produce all the known strongly-interacting particles. Many of these are unstable and decay ultimately into stable particles (protons, electrons, photons, neutrinos).

The muon enters the picture as an intermediate stage in the decay chain. Charged pi mesons, for example, decay into a muon and a neutrino; charged K mesons into a muon and a neutrino about two-thirds of the time. Of course, the muon itself is unstable, decaying in 2 millionths of a second into an electron and two neutrinos. The reason muons are observed at sea level is that, on a subnuclear time scale, they're long-lived; a muon lives 55 times longer than a charged K meson and 120 times longer than a charged pion. The muon's lifetime is long compared to the time it takes to go through the atmosphere. Also, the muon penetrates the matter in the atmosphere relatively easily. These effects result in the muon being the most abundant of the energetic particles at sea level.

Consider the three muon trajectories T1, T2, and T3, all pointing toward the same point on the earth's surface, but representing different zenith angles. Recall that the earth's atmosphere gets rapidly (in fact, exponentially) more dense as one gets closer to the earth's surface.

Strongly interacting particles resulting from cosmic ray collisions in the atmosphere would tend to be absorbed more along T1 than T2 or T3 since the

(Continued on Page 4)

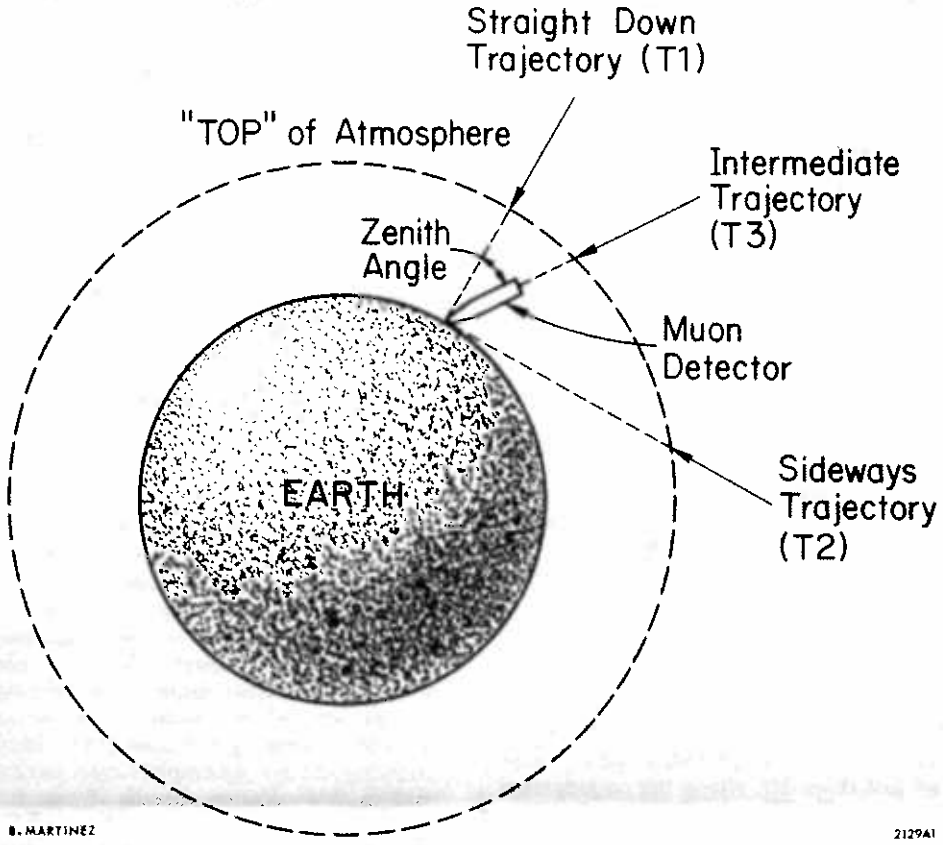

"Global" view of cosmic ray experiment. Not to scale.

Summer Employment, 1972

by Larry Esquibel

Cafeteria regulars will have noticed that it has been taking a bit longer to get through the food line since about June 19th. The new customers include many of the 103 summer employees who will be seen around SLAC until mid-September. The 103 are students who are participating in various categories in SLAC's Summer Employment Program.

Nineteen of the students are classified as NON-YOP meaning that various departments have selected individuals without reference to our YOP criteria and these same departments assume financial responsibility for the students' wages.

Eighty-four students are participating in the Youth Opportunity Program (YOP) and its satellite, the Summer Science Program (SSP). Fifty-five are "regular" YOP participants while 29 are Summer Science students. The distribution of college and high school students among the 84 students is 56 and 28 respectively. The average rate of pay for the 84 students is $2.27 an hour and the average age is 17. The distribution among male and female participants is 63 men and 21 women.

YOP participants are selected with reference to standard YOP criteria, viz., students between the ages of 16 and 22 who are financially disadvantaged. This latter requirement is determined by reference to an annual-income/family-size table provided by the Human Resources Department of the State of California.

Participants in the Summer Science Program are selected on a slightly different basis. The age limit is increased to 24; there must be some defined interest in science and selection is directed to the "culturally different" and women. This latter consideration refers to the fact that the scientific and engineering communities virtually do not include persons from minority cultures or women and by making a program such as the SSP available to these groups, we hope to make a contribution towards gradually integrating these fields.

The content of the Summer Science Program has undergone some evolution over the past three years. Under the direction of Dr. Ernest Coleman of the University of Minnesota, the Program has taken on an academic character which complements its work-experience aspect. Each year we have seen a stronger emphasis placed on formal course work with accreditation available to the student. This year the following courses are being offered:

1. Computer Languages
2. Non-Linear Differential Equations
3. Linear Differential Equations

(Continued on Page 4)

Sid Drell Receives E.O. Lawrence Award

(The following remarks were made by Sid Drell, SLAC's Deputy Director, upon receiving one of the 1972 E.O. Lawrence Awards. Professor Drell was cited for "his theoretical investigations of the range of validity of quantum electrodynamics and for his contributions to understanding electromagnetic processes involving hadrons." The awards were established in memory of the famed Berkeley physicist who conceived and built the first particle accelerator, and are awarded to men and women who have made "especially meritorious contributions to the development, use or control of atomic energy in areas of all sciences related to atomic energy, including medicine and engineering.")

Chairman Schlesinger, members of the Commission, distinguished guests and friends: I am greatly honored to receive an Ernest O. Lawrence Memorial Award. When I first learned of this award, and again as I listened to Chairman Schlesinger's very kind and complimentary words of introduction, it occurred to me how thoroughly satisfying and happy an occasion it is for me personally to be recognized and honored for doing just the very thing that has itself given so much satisfaction and pleasure to me. The excitement of probing nature's secrets at the frontiers of knowledge is in every sense its own reward.

We are all familiar with the elegant simplicity of nature that was first captured in Newton's bold vision 300 years ago when he realized that the very same law of gravity which governs the fall to earth of the apple also describes the motion of the moon and of planets hundreds of millions of miles apart in our solar system. In this century, following Newton's example, we are traveling a parallel path with regard to the laws of electricity and magnetism. We have learned that nature applies the very same laws of electricity and magnetism for determining the earth's magnetic field at large distances as measured by orbiting space probes and also, when these laws are joined with the quantum theory, for representing the precise electric and magnetic properties of atoms and electrons at very tiny distances — less than a millionth of the size of the atoms themselves. And having verified these laws in recent years we now use them confidently for probing what is inside individual protons and neutrons.

Around the turn of the century, J.J. Thomson, father of the electron, evoked the simile of smooth plum pudding for describing the atom before Rutherford observed to the contrary that the atom has a nucleus at its center. What we are now finding is that the proton interacts as if it is an extended structure built of point-like constituents. Our present probes suggest that the simile of raspberry jam with seeds is more appropriate for describing the proton than is Thomson's atomic plum pudding. Perhaps we are unravelling another layer of matter deep within the proton. We are not yet at all sure.

Particularly, as I am being honored for my theoretical contributions to these

(Continued on Page 4)

Opinion-The Laboratory's Function in Society

by J.B. Truher

Our individual treatment of each other certainly depends on what sort of world we perceive ourselves to be in. A striking case in point was the prompt reaction of a misguided friend to a recent suggestion that SLAC ought not to lay off any employees, particularly during the current recession. Our friend said, "It doesn't make any difference for the larger economy (and hence the general social good) whether SLAC spends its money in-house on salaries or outside on purchases of equipment." If one accepts that position, then he will indeed not resist the normal organizational response to budgetary cuts, which is to spend the available funds in whichever way optimizes the project goals — irrespective of the locally observed social results, individual tragedies, etc. Further, he would logically be inclined to view those who are actively resisting layoffs as being myopic in their view of the laboratory's economic impact on the society; he would call us bleeding hearts, sometimes moving but always irrational. We would see him, conversely, to have a heart of stone and hardening of the conscience too. Actually, each of us is applying a different economic theory to the situation. We shall call his theory conscio-sclerotic, while our own is simply — valid.

The conscio-sclerotic theory is a version of the Friedman Monetary theory, which was accepted by President Nixon until recently, when he "became a Keynesian" by his own admission. This must be very disturbing to Dr. Friedman, who has not been heard from since. We would be inclined to cite the president's judgment as proof of the errors in the monetary theory, except that we used to think Mr. Nixon had bad judgment; now we just think Mr. Nixon has no judgment at all, and what he does is completely uncorrelated with right, wrong, history, current events, or any version of reality. Galbraith says Keynes is outdated, and we only add that Galbraith is outdated too.

The monetary theory is sometimes called the trickle-down theory. It's been pretty fundamental to lots of government action over the past decade. The strategy is to goose the economy with a surge of government money during slack periods, then tighten up on interest rates and the general availability of finance capital during periods of growth which is high enough to be inflationary. Nixon tried the latter some time ago, and then threw Dr. Friedman overboard.

The theory says that money introduced at the top finally trickles down to people in the form of corporation activity and thus jobs. There's a good deal of truth in that. But valid observations of the social results of government's introduction of capital will show that the human effects differ drastically depending on how the money is introduced, whether for salaries or for capital expenditures.

The economic function of a laboratory in the public sector is certainly distinct from its scientific function. In our great American system of monopoly capitalism, that function can be described in terms of the flow diagram.

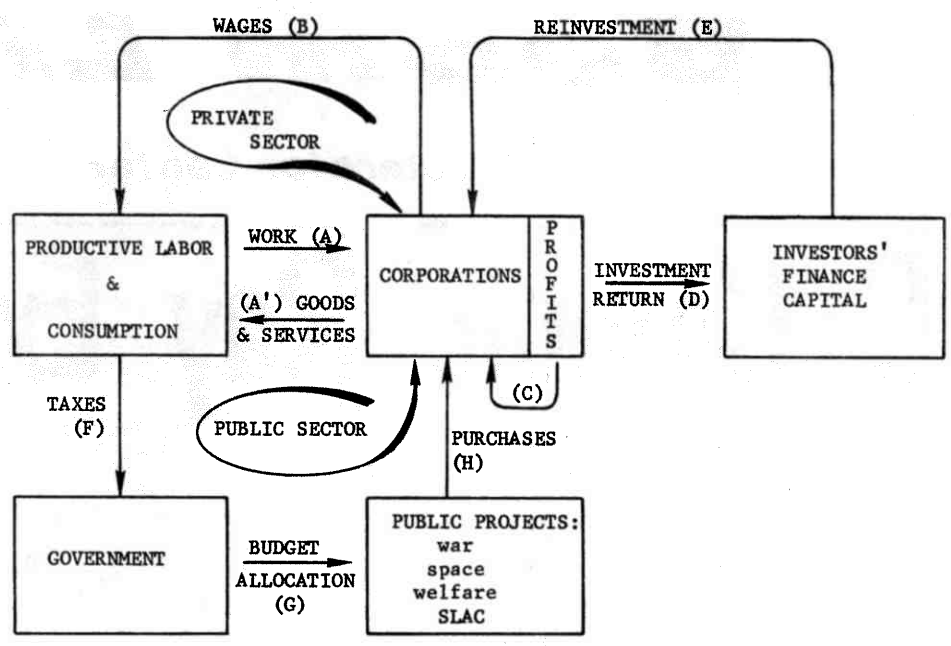

In the beginning... productive labor exchanges work (A) with corporations for wages (B). But notice that the corporations retain a percentage in profits, part of which is reinvested (C) in the corporation and part of which is passed on as investment return (D) to lenders. Investors then reinvest (E) in corporations of their choosing, among other things.

Notice that the investors are in a loop with the corporations. There must be vigorous corporation activity if investors are to gain a return on their money. But the corporations can only survive if there is vigorous consumption. Here enter automation. Gad-Zeus, automation, even mechanization and industrial revolution! As workers are displaced they cannot consume. If corporations cannot sell, they wither, and bankers go broke. Today these loops involving only capitalist investors, corporations, and the working people can't survive by these elements alone.

Banks, corporations, and investors are bloody unhappy when they go broke, and fairly active in the American political funding process. So we find new entries to the economic scene: government and the public sector. The public sector can include all those areas which do not produce marketable products or services for private consumption. This is so because, were government to fund housing, for example, by paying construction salaries directly from tax revenue, then government steals a rich mortgage market from investors who have a hard enough time finding a place for their capital to earn a return. By working only in areas which do not yield a marketable product, government can maintain a high level of corporation activity without interfering with the corporation/investor exchange processes. Typical government choices have been war, space, welfare, education, and research.

All this seems quite arbitrary to the average citizen. After all, what difference does it make what are at the roots of the economy so long as the citizen has a job and a decent standard of living. But it's a matter of obsessive importance to the investor. The corporate state has to function, indeed it always has to grow if the investor's money is to earn him a return.

What's wrong with that? Lots. Already several major industries are operating at 50% capacity. Should we follow Mr. Nixon's advice and grow until we operate at 25% capacity? The investors also would like us to protect their overseas markets, while we goose the economy. We do this with our armies all over the world. Don't lose your lunch, but the kids call it imperialism.

That rule about the public sector producing only non-marketable products and services is starting to gall the poor segment of the population, including those on welfare, who are doing their share of goosing the economy while getting goosed in another way. The people have real needs, and they don't like the investors' rules. Our overseas geese, doing their thing for freedom, are losing popularity, with their recurrent pranks of blowing hell out of Indochinese people and preserving Latin American markets by supervising and training terrorist military dictatorshops.

Back home at SLAC, we can see our economic function perhaps more clearly now. We can all properly glory that we're not producing evil products, and we're at the very least keeping an avid collection of science buffs happy. That's our scientific function. Our economic function is rather like the welfare recipients'. Look back at the flow diagram. Productive labor pays taxes (F) to government which budgets (G) us to do science and make various corporation purchases (H) which turns the corporation/investor crank around once more.

Everybody happy? Not really. The social result of outside purchases is partly to yield working people's salaries in corporations, but also to make rich investors richer. In today's America this latter result is a very questionable way to spend our money.

Direct salary payments at SLAC are, always at the lower levels, payments to people with immediate personal needs; that's not the same social result as big banks getting bigger. It also follows that SLAC's economic role has important local, social consequences. A sound argument can be made that our general staffing level now is a reasonable one to operate the laboratory; otherwise we've got a management problem. From a humanitarian perspective, to allow even normal attrition to diminish the laboratory population is an unacceptable response to local people and the local community in times of high unemployment. We ought to maintain our present level of staffing whatever the level of funding. It's a matter of institutional ethics, and if you've got your economics on straight, righteous conduct is clear. The real issue is whether to distribute income to people for consumption of necessities, or to distribute it to already wealthy people who control investment capital in the United States. There are ways to argue against this position, but the arguments are countered by recognizing that bringing capital into a collective life-sustaining community is always the ultimate answer. We're not that kind of community yet, but we're working on it. Management has a role to play in the making of that community.

Beware the conscio-sclerotic theory.

(Editor's Note: The preceding is a personal opinion by the author on SLAC's economic role. It follows other statements of opinion in the BEAM LINE, such as K. Maddern's article of December 20, 1971. As was noted then, the BEAM LINE welcomes such expressions of personal views, within space limitations.)

Salary Processing

Editor's Note: The following article was prepared by the Personnel Department in response to many queries regarding classification, reclassification, promotion, job specifications, "desk audits," salary review procedures, etc.

* * *

First of all, let's clear up the meaning of the oft-used classification terms "exempt" and "non-exempt." There is a law of the land called the "Fair Labor Standards Act of 1938, As Amended." This act was passed by the Congress of the United States to assure that workers would not be exploited. The most pertinent provisions of this act are the wage and hour provisions. Specifically, these provisions make it illegal for an employer either to require or to permit an employee to work more than forty hours in one week without his being paid at least time-and-one-half his hourly rate for those extra hours.

In response to arguments that this "overtime rule" could not be sensibly applied to such employees as managers, scientists, door-to-door salesmen, teachers, and others whose productivity is not directly related to time spent on the job but to other qualifications, the Act permits some exceptions. If such non-hourly employees can meet some very specific criteria written in the Fair Labor Standards Act, then they may be considered as "exempt" from the wage and hour provisions of the Act. Such employees, who can be proven to be "exempt," need not be paid overtime for extra time worked.

Everybody else, however — everybody not described in the act as "exempt" — is not exempt ("non-exempt") from the wage and hour provisions of the Act and must be paid overtime for extra hours worked.

The government assumes and rules that all employees are "non-exempt" except those which the employer can prove are "exempt." In fact, the government audits the employer's records to assure that he is not cheating by classifying people as exempt when they really aren't — that is, when they do not meet the stiff criteria of the Fair Labor Standards Act. For this reason, the Personnel Department has to very carefully review and document any promotion to exempt status such as from Technician III to Staff Associate. Such a promotion has to meet the criteria of the Act.

There are only four types of workers who can be classified as exempt from the wage and hour provisions. In simplified form these are (1) executives and managers, (2) administrators, (3) "professionals" such as scientists, engineers, artists, and teachers, and (4) outside salesmen. Everybody else is non-exempt from the protection of the Fair Labor Standards Act.

In order to be able to prove suitable basis for classifying an employee as exempt, the Personnel Department carries out what is called a "desk audit." This is an inappropriate term which really only means a review by the Personnel Department of the work done by the employee being recommended for exempt classification. It almost always is limited to an interview with the employee's supervisor. If the supervisor can show that the employee actually falls in one of the above four categories, then the Personnel Department can endorse the request for classification as exempt and can be prepared to substantiate this to government auditors.

At Stanford, within these two categories, exempt and non-exempt, there are further classifications. In the exempt category at SLAC for instance there are Scientific and Engineering Associates I and II and Staff Members. In the non-exempt category, again as an example, there are technicians I, II, III and specialists. The University has published a "black book" which, just like

(Continued on Page 3)

Doug Dupen, SLAC's new Personnel Director

Dupen Appointed Personnel Director

Effective August 10, Doug Dupen assumed the job of SLAC's Personnel Director. He has retained his position as Head of Public Information and as SLAC's Inventions Administrator, but will no longer be Assistant to the Director.

Doug received an A.B. in Speech from Humboldt State College and another A.B., this time in Physics, from the University of California. He obtained an M.S. in Physical Science from Stanford.

Prior to coming to SLAC in 1962, he served as a U.S. Navy Electronics Officer, an Electronics Engineer, and as an Engineering Writer. He is a member of the Institute of Electrical and Electronics Engineers and of the Technical Information Panel of the AEC.

In announcing the appointment, Dr. Panofsky and Mr. Moulton stated: "We are confident that Doug's appointment will enhance the operations of the Personnel Office and that his past experience with both Science and Administration will help harmony at SLAC and contribute to SLAC's productivity."

Trip through the Spiral Reader

by Charlie Hoard

The door to the Spiral Reader opens off a corridor in the Central Lab. It's the only corridor at SLAC with a red carpet (not for impressing visiting dignitaries but to hold down dust). One step through the door and you're on the bridge of the Starship Enterprise. The muffled hum of engines pervades the deep gloom. While your eyes adapt to the darkness of empty space you can see on the left rows of dancing yellow lights — obviously the computer in control. Beside it a steady red light glows beneath a squiggly line like a round green TV. One moment the line is flat as a desert and the next sends a caravan of dromedaries marching across. To the right hang rows of magnetic tapes with only the white hoops around their rims showing.

In the center of the room a square table reflects the tracks of shooting stars. Around it dark pillars and glistening mirrors rise toward a ceiling of conduits, valves, and jumbled shapes. Before the table bends the pilot of this starship, scanning two television screens, one in black and white and one in green, patterned with trails of individual stars. A teletype at the pilot's left clatters. After a quick look, the pilot punches a few keys in reply and turns back to the star-scopes and the steering control — a black ball, floating in a hole in the white table with only its top showing, so that a touch of the pilot's finger sets it spinning in any direction.

Fantasy? No, the TV reruns are fantasy; this is real. That green squiggle is a Tektronix 547 oscilloscope plugged into the computer by Dave Bailey, Bill Pioske (days), Charlie Leon, Earl Rice, Terry Halliday, or Larry Williams (nights), the electronic techs for the Spiral Reader. No real starship could run for a day without a scope and you've never seen one in those fake film sets, have you? The pilot might be Thelma Whaley, Lucy Wilson, Mary Parish, Craig Wilson, Sibby Freeman, or Ann Hall on day shift, and Neil Reid, Pat Rice, Bob Britton, Steve Treado, George Tunis, Wing Fong, Abel de la Cerda or Zorhab Bassilian at night.

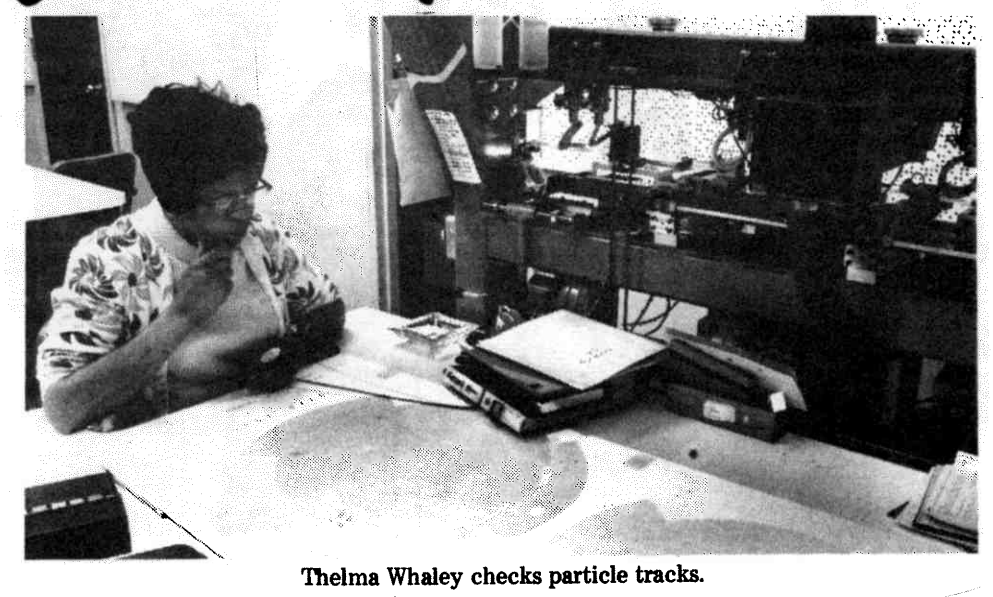

Thelma Whaley checks particle tracks.

For three years the Spiral Reader has measured bubble chamber tracks made by for collisions of K^0 mesons. Experimental Group B has used the measurements of hundreds of thousands of bubble chamber negatives to study the K^0 meson. The use of negatives is why the dark pictures are called "bright field" and the clear pictures are called "dark field." There are as many machines for measuring tracks as there are appropriations for them. A microscope with a moving stage works very well but with a million pictures in one experiment it's too slow.

The basic measuring machine (Data Analysis has six) projects the picture onto a table, magnifying it perhaps 10 times. This is not really enough for accuracy so a small television camera looks at a tiny part of the projection and magnifies it another ten times. Instead of peering into a microscope, the scanner can look at an ordinary TV set (the picture comes through on Channel 6). There has to be an accurate "engine" to move the film so that any spot can be centered on the TV camera, and there have to be mechanical techs like Charlie McManus, Bill Chandler, Norm Crouch, Paul Burch and Jeff Richard to keep the engines accurate and build and install modifications. The engine on the basic machine measures to one micron, about 1/25,000 of an inch. That black steering ball, on its pillow of compressed air, actually controls the movements of the engine.

The Spiral Reader projects pictures much like the basic machine, and it has similar film reels, engine, and black bocce ball. But on the basic machine each track from the collision or event must be measures at about 8 points; the Spiral Reader measures all the tracks at once. As an example, the round diagram is a

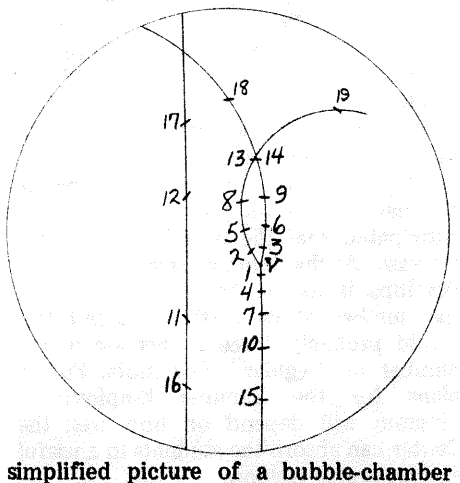

simplified picture of a bubble-chamber event showing one particle colliding at the vertex marked V, and one particle going all the way through. If the vertex were centered on the TV camera the Reader would scan in a spiral, reporting tracks at the points 1, 2, 3, ... 19 in that order. The clever part is the way the Reader reports its data. The rectangular

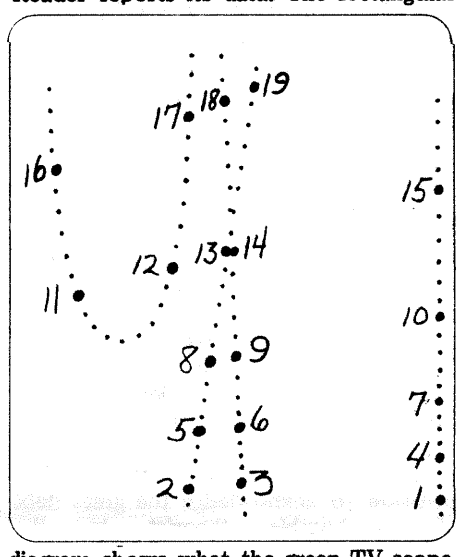

diagram shows what the green TV scope would display for this same event. The points are numbered to correspond. The real spiral is tighter than this example and would include the small points that are not numbered. Notice that the incoming track, which was practically straight, is now vertical. The negative particle that curved to the left is now straight but leaning to the left. The positive particle that curved (more than the negative) to the right now is straight but leans (more) to the right. But the track that went almost straight through is now a curve. Unless a track starts (or ends) at the vertex, it cannot become a straight line so that a computer can easily distinguish event tracks from "noise."

The computer attached to the Spiral Reader is a PDP-9. It controls the engine, the spiral, the film, and the teletype; it reads a magnetic tape to decide what to measure next and where to find it. It writes all the points from the green scope on another tape for the IBM 360/91 to analyze in the wee hours at night. Peggy Malley maintains the Spiral Reader programs in both computers.

At the rate of 5000 events measured per week, the Spiral Reader collects a great deal of information on the behavior of the fundamental particles of physics. It may not be a Starship but it's just as far out. As the voice of Gloria Strelchuk for Nan Thompson proclaims daily on the PA system: "The Spiral Reader is UP!"

Our Thanks to..

John Carey for his close-up view of the hummingbirds and to Glenda Jones for her picture of the Minority and Women's Committee, both of which appeared in the last issue of the BEAM LINE.

League of Women Voters

The Palo Alto League of Women Voters will be registering voters from Santa Clara and San Mateo counties on September 14 from 11:30 to 1:30 p.m. in the SLAC Auditorium breezeway.

Salary Processing

(Continued from Page 2)

the Fair Labor Standards Act, sets specific criteria for classifying employees in these classifications. For instance, one of the criteria for classifying a P.S. and E Technician at level III, is that it is necessary to demonstrate and document the fact that this technician spends the bulk of his time in non-routine work requiring the exercise of independence, judgment, superior technical skill and insight to technical problems.

Again, to be sure of equity throughout the University, the Personnel Department has to be sure that the classification or reclassification of an employee conforms to the University-wide criteria. In some cases, here too a "desk audit" is required whenever the basis for classification is not obvious.

Finally, on the subject of salary reviews: whenever a salary review is scheduled for an employee, whether it also entails a reclassification or not, the review is first carried out by the employee's direct supervisor. This then is reviewed and may be modified by the employee's group leader. Next the recommendation is reviewed by the Personnel Department for appropriateness by many guidelines including federal restrictions, AEC contract requirements, University policy, budget, etc. The original recommendations and the Personnel Department's comments are then delivered to the Salary Review Committee.

The Salary Review Committee is made up of the four SLAC Associate Directors, Mr. Moulton, Mr. Pindar, Dr. Neal, and Dr. Ballam. This committee meets regularly and reviews every single salary change and reclassification recommended at SLAC. Every such change may be modified but must be approved by the Salary Review Committee. In most cases, this committee is the final authority. In certain cases (e.g., Staff Member), all actions must be further personally approved by Dr. Panofsky. In other cases (e.g., large increases or high basic salaries), all actions must be further approved by both the University Personnel Department and the AEC.

For further information on any of the above, call Barbara Coppock or Jerry Jobe at extension 2365 or 2366.

Electronics Technicians

Have you ever thought of being an electronic technician? If you are not working in a skilled job or higher, this field may offer a match for your interests. If you want to be an electronic technician SLAC offers you an exceptional opportunity to learn while you earn in the Skills Training Program. In the STP you have the advantages of receiving classroom instruction during work hours along with on-the-job training. In addition you will have a tutor to help you over the rough spots.

Applicants among SLAC employees are now being sought for electronic technician training to begin on September 18. For information phone Gerry Renner, ext. 2351.

Dr. James R. Schlesinger, (l.) Chairman of the U.S. Automic Energy Commission, presents the E.O. Lawrence Award to Sid Drell.

Lawrence Award

(Continued from Page 1)

studies of electromagnetic laws and interactions, I am very aware of the fact that the life blood of natural science is experimental data and observations. Elementary particle physics — indeed all physics — is an experimental science! In the absence of data to challenge or refute our ideas and equations, we theorists can work away with comfortable immunity, but our theorizing is pretty irrelevant. To make progress there must be data! And progress at the frontiers of the submicroscopic unknown requires the very sophisticated and expensive tools of "Big Science." So I would like to use this occasion to acknowledge the great debt of a humble theorist to the scientist-administrators on whom we rely to provide the necessary funding, the scientist-engineers who build and operate the tools for making measurements, and the experimentalists who provide the data that nourish us — and often cause us indigestion!

Finally, there is a personal debt that I would also like to acknowledge to several of my teachers and colleagues whose encouragement and assistance have been especially important during various stages of my education and career. I scarcely need mention that the first and certainly the most important of my teachers were my parents. As a Princeton undergraduate I was introduced to serious physics research by John Wheeler, widely honored as a research physicist, but revered most highly by those of us fortunate to have studied with him as a devoted and inspiring teacher. As a graduate student at the University of Illinois in Urbana, I had the marvelous good fortune to learn from and to work on my dissertation under the supervision of the late Sidney Dancoff, a brilliant and highly respected young theorist who tragically died of cancer early in his career. His relationships with his students — his concern for us, his patience with us, and his stimulating teaching — have been models to me in my own academic endeavors. My debts to Sid Dancoff are immeasurable and inexpressible. He had himself been a student of Oppenheimer's and through him I claim second generation descendency from that great American school of physics first created by E.O. Lawrence, Oppenheimer, and their California colleagues in the 1930's.

Physics is a persistent process of learning and in the years since my degree many of my associates and students have contributed to my continuing education. To two of these in particular I am very happy to have this opportunity to express my deep indebtedness. For close to twenty years Wolfgang Panofsky of SLAC and Victor Weisskopf of MIT have been very close and wonderful teachers, colleagues and friends. They have been inspiring examples of devotion to physics research and education, to public service, and to the sheer joy of doing physics.

Again thank you for the honor of this award.

THE BEAMLINE

Editor — Kathleen Maddern
Associate Editors — D. Dupen, S. Kociol
Graphic Artist — Walter Zawojski
Regular Contributor — Charles Oxley
Illustrators — Bob Martinez, Norman Chin, Jim Wahl

Published by the
SLAC Public Information Office
P.O. Box 4349, Stanford, California 94305
Tel. (415) 854-3300 Ext. 2204

Employment

(Continued from Page 1)

4. Topics in Modern Physics
5. Statistics for Scientists
6. Physics Seminars.

Each student is assigned to a group and off-class hours are spent contributing to the group's work in varying degrees. A dissertation on the experience gained at SLAC is required of each student at the end of the summer. This should include a report on the science project worked on as well as personal reactions to SLAC's scientific atmosphere. Dr. Coleman will report on this Program in greater detail at the end of the summer and portions of his report will reach you via the BEAM LINE.

At present there is a ratio of about one summer student per ten regular SLAC employees. This level seems to be an adequate saturation point and it is not anticipated that the overall number will increase. As the Summer Science Program develops, it may be beneficial to increase the number of its participants but this would probably force a decrease in the number of "regular" YOP slots. Future plans for the Summer Employment Program will depend on how well the Center can absorb the students in a useful and rewarding fashion.

A further report on the progress of the Program will appear in the Fall. The Program's sponsors and organizers appreciate the efforts of those who have accepted students and assure you that they also share this recognition of your cooperation.

SLAC AEC Reorganized-Two Retire

On July 1 of this year, Robert D. Thorne, Manager of the Atomic Energy Commission's San Francisco Operations Office (SAN) instituted a number of changes in the administrative relations between SAN and contractor installations. One result of this has been the reorganization of what used to be the AEC's Palo Alto Area Office into a smaller group entitled the Office of Program Coordination and Management — SLAC. At the same time, two veterans of 10 years with SLAC and more than 35 years of federal service, Louis Kelly and John Kuhta, retired.

We asked Howard Hooper, who will remain at SLAC as Director, what the changes were all about. He said that the management concept is to provide for more effective and positive management of University contracts by means of functional delegations of responsibility and authority to SAN Divisions. Personnel in those Divisions would assume a role of greater involvement with people at SLAC. As an example, Helga Christopherson, SAN Personnel Relations Officer, has been commuting from Berkeley to SLAC on Wednesdays and dealing functionally with our Personnel Department.

While all the details have not been finalized, it appears that Mr. Hooper will spend most of his time at SLAC providing coordination and management of the Physical Research programs including administrative actions on routine matters. He will also undertake other special assignments at SAN from time to time. Allan Gordon will be on engineering assignments at both SLAC and LLL Livermore. Mrs. Margaret Yohannan will continue as Secretary in the office pending finalization of the reorganization.

Both Lou Kelly and John Kuhta had been at SLAC since 1962. Lou began federal service in 1937 with U.S. Army Engineers, Fort Peck, Montana. He was at the time involved with construction of the Fort Peck Dam. Before coming to SAN in 1951, he served at Oak Ridge Operations Office, Tennessee, and the Hanford Operations Office, Richland, Washington.

At SAN he was Safety Engineer in the Construction Division. He came to SLAC as a Contract Specialist and remained in that position until he retired.

John Kuhta started working for the government in 1936 with the U.S. Engineer's Office in Milwaukee. He came to San Francisco in 1953 and spent a year at Fort Ord in 1961. He joined the AEC in 1962 and was assigned to SLAC as Construction Engineer. When he retired last month, as General Engineer, he had better than 35 years of service.

Cosmic Ray Experiment

(Continued from Page 1)

particle hits layers of increasing density head-on. T2 and T3 represent trajectories in which a particle moves a longer distance through the atmosphere, but enters increasingly more dense air more gradually. Thus, a strongly interacting particle is more likely to be absorbed and less likely to decay into a muon along T1. So, with the assumption of strongly interacting "parents" for muons observed at sea level, more muons should be observed along T2 and T3. than T1, and more along T2 than T3. In physicists' talk, the angular distrubution of the muons would be "anisotropic," or nonuniform, with a higher number recorded at larger zenith angles.

Suppose, on the other hand, that a primary cosmic ray particle coming in on each of the three trajectories produces a heavy non-strongly-interacting particle which decays into a muon. The non-strongly-interacting particles are much less likely to be absorbed, regardless of the trajectory, and hence more likely to decay. The result would be that the intensity of sea-level muons should not depend much upon the zenith angle. Physicists would call the resulting zenith-angle-independent distribution isotropic.

What has been observed?

In 1967 a University of Utah group published data obtained from an underground cosmic ray experiment. They observed muons penetrating a great distance underground and saw an isotropic distribution, contrary to the conventional pi-K decay model.

Particle physicists were intrigued, and a SLAC-LBL collaboration was formed to investigate the phenomenon. In an effort to avoid the uncertainties of underground experiments, the experiment was set up in the SLAC research yard, using the large air gap magnet and spark chambers from muon scattering experiments. People closely associated with the experiment were S. Flatte, R. DeCoster, and M. Stevenson of LBL, and W. Toner and T. Zipf of SLAC (Group E).

The muon flux was measured for zenith angles between 60 and 87 degrees, with particular attention on muons above 1000 GeV (or 1 TeV).

And the results? No evidence for an isotropic angular distribution was observed. From this it was concluded that if a very high energy phenomenon such as that contemplated in this experiment exists, it must manifest itself in muons well in excess of 1000 GeV.

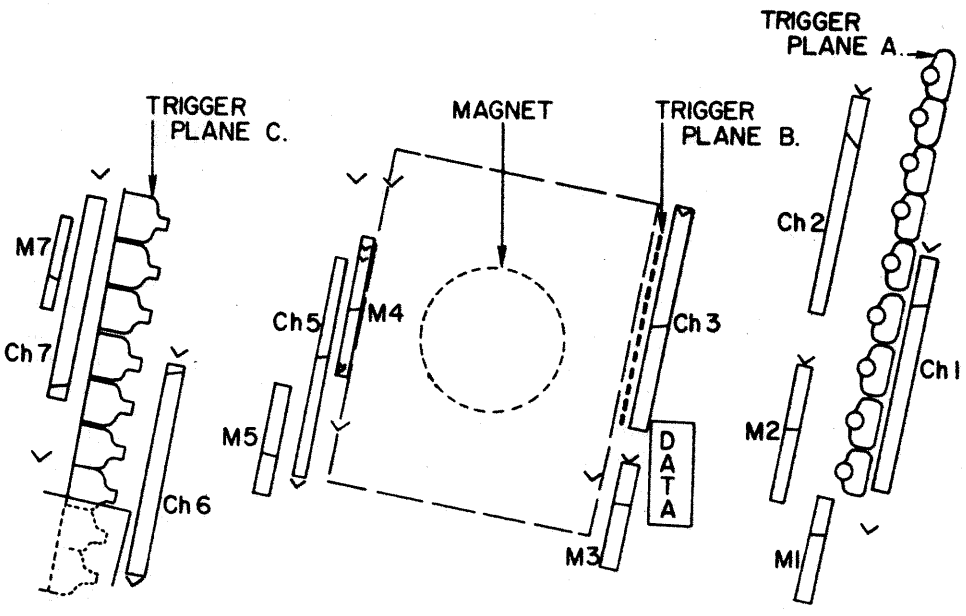

Diagram of cosmic ray apparatus.