STANFORD LINEAR ACCELERATOR CENTER

Beam Line

Spring/Summer 2001, Vol. 31, No. 2

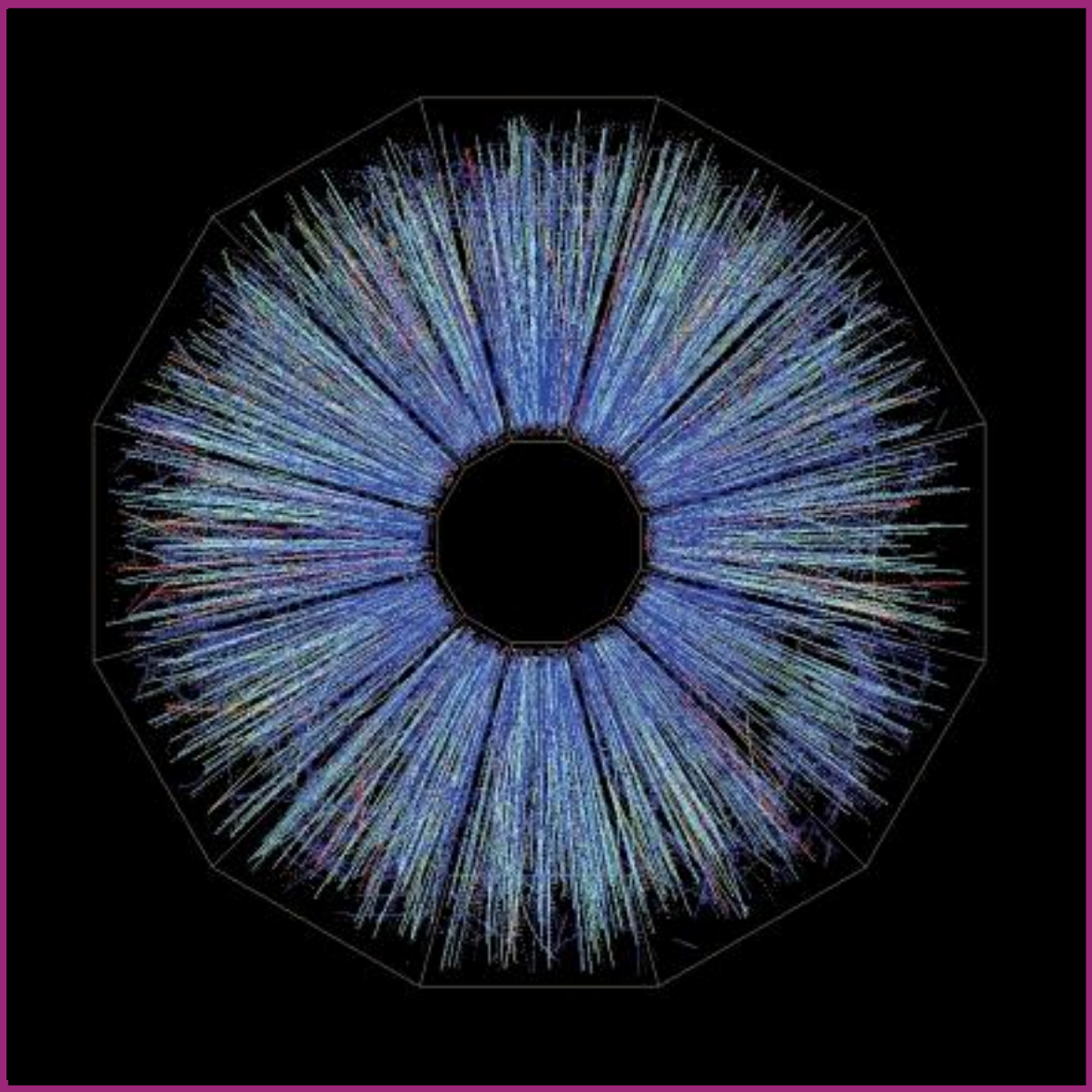

Beam Line

A PERIODICAL OF PARTICLE PHYSICS

SPRING/SUMMER 2001/VOL. 31, NUMBER 2

The *Beam Line* is published quarterly by the Stanford Linear Accelerator Center, Box 4349, Stanford, CA 94309. Telephone: (650) 926-2585.
EMAIL: beamline@slac.stanford.edu
FAX: (650) 926-4500

Issues of the *Beam Line* are accessible electronically on the World Wide Web at http://www.slac.stanford.edu/pubs/beamline. SLAC is operated by Stanford University under contract with the U.S. Department of Energy. The opinions of the authors do not necessarily reflect the policies of the Stanford Linear Accelerator Center.

Cover: STAR, one of four experiments at the Relativistic Heavy-Ion Collider at Brookhaven National Laboratory, will explore the quark-gluon plasma. Here particles spray away from colliding gold nuclei, as viewed from the front. (Courtesy STAR collaboration, Brookhaven National Laboratory)

Printed on recycled paper

CONTENTS

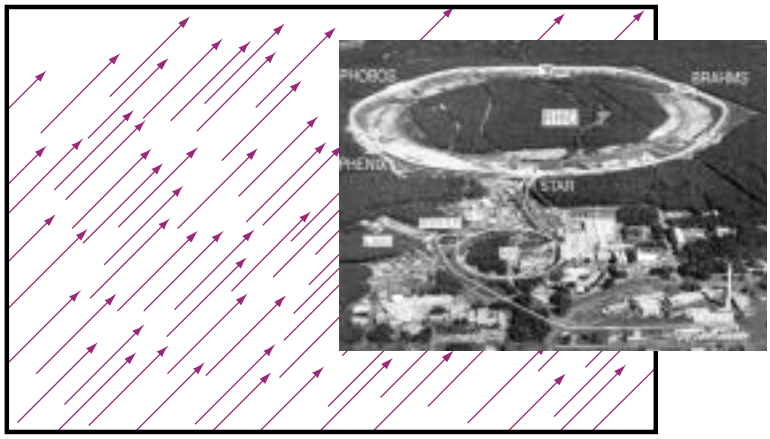

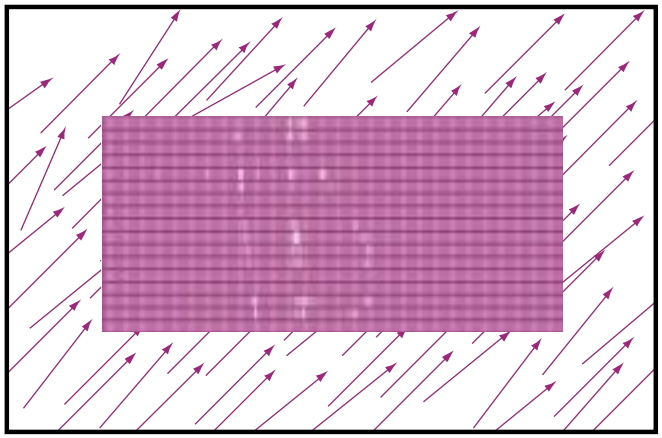

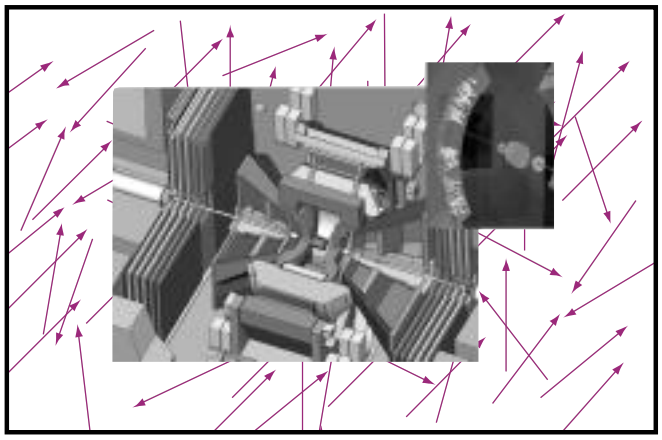

FEATURES

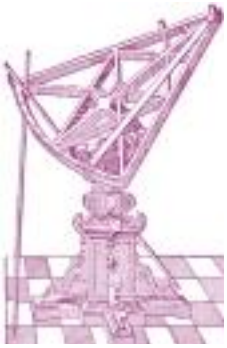

DEPARTMENTS

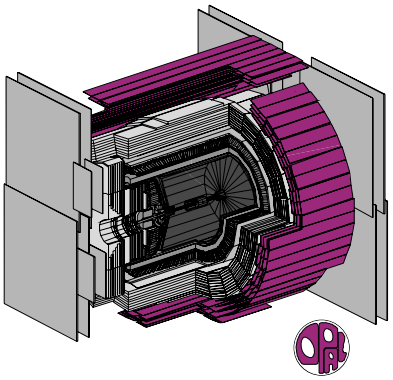

The Relativistic Heavy-Ion Collider
Creating a Little Big Bang on

by FRANK WOLFS

MANKIND HAS ALWAYS been fascinated with looking back in time. Historians and archaeologists use historical records and artifacts to trace back the evolution of mankind. Biologists use evolutionary theory to describe the development of life on Earth. The Earth is relatively young by astronomical standards, about 4.6 billion years, and the Universe is even older.

It is believed that the Universe was created about 15 billion years ago, in an event that is often referred to as the "Big Bang." Astronomers provide us with a wealth of information about the evolution of Universe by probing it at ever-increasing distances from the Earth. These observations can take us back in time by about 14 billion years, at which time star formation started to occur. Nuclear and atomic physicists provide us with a detailed description of the evolution of the early Universe, between a few seconds after the Big Bang and the start of star formation. During this period, the basic building blocks of matter, protons and neutrons, were formed, and light nuclei and atoms were created.

Although these different areas of science allow us to look back billions of years in time, much uncertainty remains about the evolution of the Universe during the first few seconds after the Big Bang. Many fundamental questions, such as why the Universe is dominated by matter instead of having equal amounts of matter and antimatter, can only be answered if we know in detail what happened during the first few seconds after the Big Bang.

To recreate the conditions that existed a few microseconds after the Big Bang, a new accelerator facility was built at Brookhaven National Laboratory (BNL) in New

Long Island

York. This facility, called the Relativistic Heavy-Ion Collider (RHIC), was designed to accelerate fully-stripped ions, from protons to gold, up to energies of 100 billion electron volts (GeV) per nucleon. Several accelerator systems are involved in the process of accelerating these ions, each of which is shown in the photograph below. Negative ions (atoms with one or more extra electrons) are created in an ion source and accelerated to an energy of about 1 million electron volts (MeV) in the tandem accelerator. In this process the ions are stripped of some of their electrons and leave the tandem as positive ions. These positive ions are transferred through the heavy-ion transfer line (HITL) to the booster accelerator, where their energy is increased to 78 MeV per nucleon. Upon leaving the booster accelerators, the positive ions are stripped of all their electrons and injected into the alternating gradient synchrotron (AGS). The AGS accelerates the ions to energies of 10.8 GeV per nucleon, which is RHIC's injection energy. The bunched ions are extracted from the AGS and injected into the two 2.4-mile long RHIC rings (called the blue ring and the yellow ring) where they circulate in opposite directions. In the RHIC rings, the energy of the ions is increased to up to 100 GeV per nucleon. The ions are stored in the rings for periods of six to twelve hours in up to 57 separate bunches. Each bunch contains billions of ions traveling with velocities of up to 99.995 percent of the speed of light. Each ion makes about 100,000 trips around the

The Relativistic Heavy Ion Collider facility (RHIC) at Brookhaven National Laboratory. The locations of the four experiments (BRAHMS, STAR, PHENIX, and PHOBOS) are indicated.

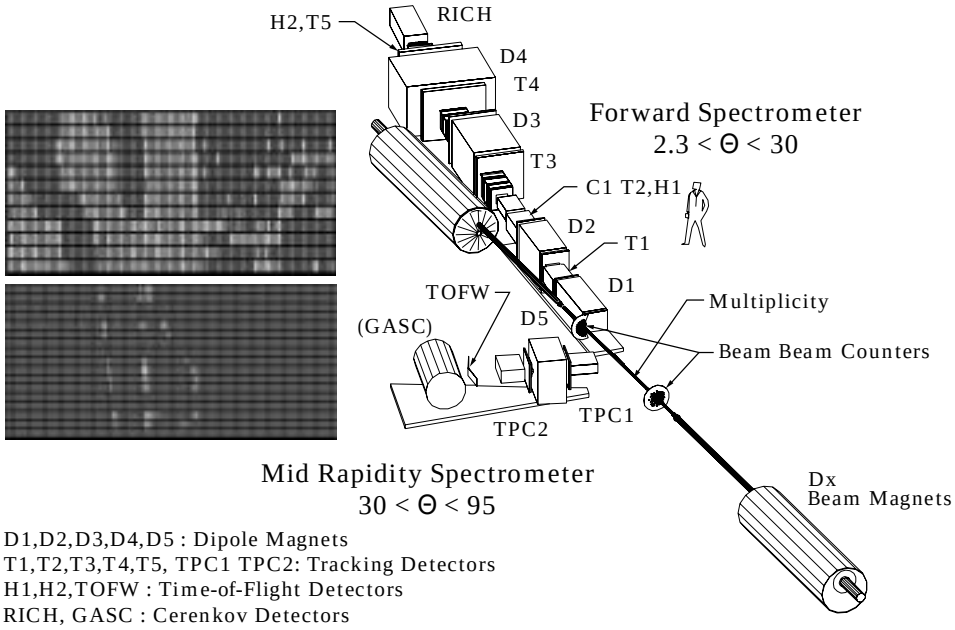

The BRAHMS detector system. The event displays on the left-hand side show charged-particle tracks, reconstructed on the basis of the information provided by the time-projection chambers TPC1 (top) and TPC2 (bottom), for one of the first collisions observed at BRAHMS on June 16, 2000.

RHIC ring each second. The ions are kept in circular orbits by 1,740 superconducting magnets which are installed around the RHIC rings. To make these magnets carry electricity without resistance, they are cooled by liquid helium to a temperature of minus 451.6 degrees Fahrenheit. The amount of helium used at RHIC would be enough to fill all the balloons in the Macy's Thanksgiving Day Parade for the next century.

The yellow and blue beam lines cross at six different locations around the ring, where head-on collisions between ions moving in opposite directions can be observed. In these collisions, extremely high temperatures are created over an extremely small region of space. Initially, this region has a diameter close to 10^{-14} meter, and its temperature exceeds a trillion degrees (hundred thousand times hotter than the temperature at the center of the Sun). The conditions in this region will be similar to the conditions that existed in the early Universe, a few microseconds after the Big Bang, and it is believed that the so-called quark-gluon plasma (QGP) will be formed in this region. This extreme state of matter is expected to exist for less than 10^{-23} sec. When the QGP cools down, it will create a shower of thousands of particles, which are detected with four detectors that are installed in four of the six intersection regions. These four detectors are BRAHMS, located at 2 o'clock; STAR, located at 6 o'clock; PHENIX, located at 8 o'clock; and PHOBOS, located at 10 o'clock. The information gathered by these detectors will be used by physicists to study the properties of the quark-gluon plasma. The properties of this extreme state of matter will provide detailed information about the conditions and the evolution of the early Universe.

FIRST COLLISIONS AT RHIC

The ions that are accelerated at RHIC are extremely small. Each ion has a radius of about 10^{-14} m. To create collisions between the ions circulating around the accelerator, the operators carefully steer the beams in the interaction regions, making minute adjustments to their orbits using magnetic lenses. Since it is impossible to steer a single ion accurately enough to ensure a head-on collision with a one moving in the opposite direction, many billions of ions are packed in bunches with a diameter close to 0.001 m and a length of about 1 m. The operators manipulate the orbit of these bunches in order to ensure that the counter-rotating bunches cross each other at the interaction points. Since there are so many ions in each bunch, there is a small probability that a collision between ions occurs when the bunches overlap.

On June 12, 2000, the first collisions between gold ions, traveling with energies of 30 GeV per nucleon, took place. Pictures of the first collision events observed in the four RHIC detectors are shown on successive pages. At the end of June the first collisions between gold ions with energies of 70 GeV per nucleon were observed. In these first weeks of RHIC physics operation, only six bunches of gold ions were circulating in the RHIC rings, and as a consequence the collision rate was low (about one collision per second). In July, the number of bunches of gold ions stored in the machine was increased to 55, dramatically increasing the collision rates observed in all experiments. The first physics running period at RHIC was concluded in September 2000 at which point the observed luminosity was 10 percent of the design luminosity. The second year of RHIC physics will begin in the middle of 2001.

PROBING THE QUARK-GLUON PLASMA

The quark-gluon plasma is an extraordinary state of matter where elementary particles, called quarks and gluons, move around freely instead of being shackled together in the protons and neutrons that make up the nucleus of the colliding ions. When the plasma cools down, it will mimic the transition that occurred in the early Universe when the constituents of ordinary matter were created. Any irregularities in the plasma-to-matter transition may provide new information about some of the remaining unanswered questions about the evolution of the early Universe.

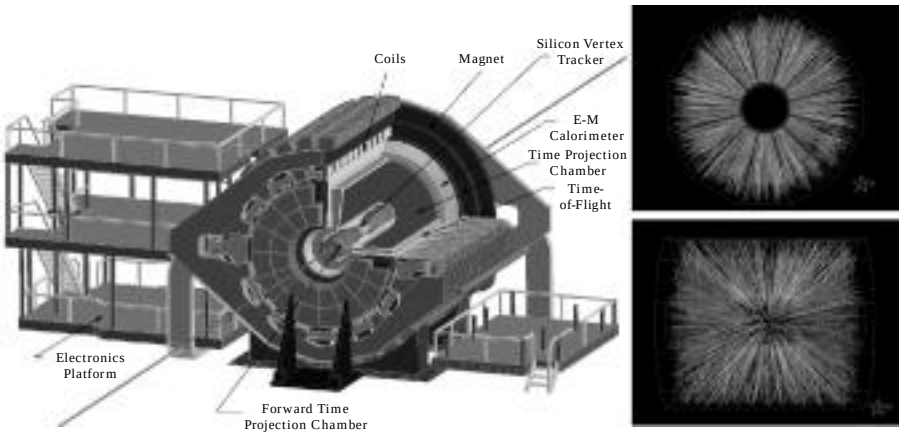

The STAR detector system. The event displays on the right-hand side show front and side views of reconstructed tracks in the time-projection chamber for one of the first collisions observed at STAR on June 12, 2000 (see cover).

Two different types of probes can be used to study the properties of the quark-gluon plasma. Leptons, such as electrons and muons, are radiated when the plasma is cooling down. The leptons can travel through the quark-gluon plasma with little interaction, and thus can be used to provide a view directly into the heart of the plasma. After the plasma cools sufficiently, quarks and gluons condense into particles consisting of two or three quarks. This process, called hadronization, produces hadrons, such as pions, kaons, and protons. Any hadron formed within the quark-gluon plasma will quickly fall apart due to hadronic processes, and the only hadrons detected in the laboratory are those that are produced on the relatively cool outer surface of the plasma. These hadrons provide us with a view of the process of hadronization, but do not provide us with a look directly into the plasma. At RHIC, three experiments (BRAHMS, STAR, and PHOBOS) study the properties of hadron production, while one experiment (PHENIX) focuses on lepton production.

The RHIC experiments probe the quark-gluon plasma by detecting and

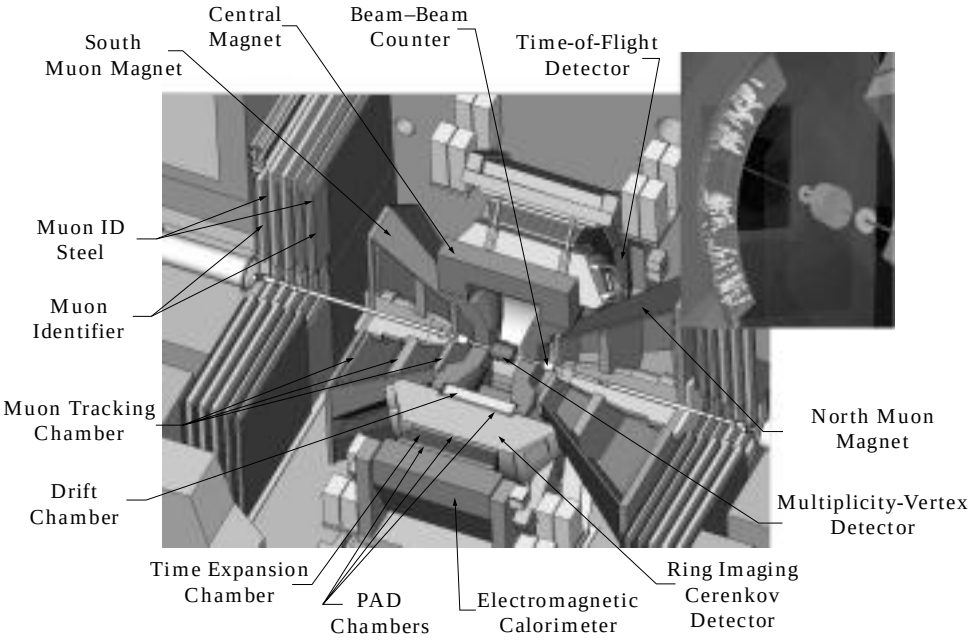

The PHENIX detector systems. The event display on the top right-hand side shows reconstructed charged-particle tracks in the drift chamber for the first collision observed at PHENIX on June 15, 2000.

measuring the properties of the particles produced during the various phases of the evolution of the plasma. During a typical head-on collision between two gold ions, many thousands of charged hadrons are produced. This enormous number of charged particles requires complicated and highly segmented detectors to be used. The quark-gluon plasma is expected to decay within 10^{-23} sec after its formation. Since for most experiments it takes at least 10^{-9} sec before the first particles can reach the detectors, the quark-gluon plasma cannot be detected directly, and its properties must be inferred from the properties of its decay products. The nature of the work of scientists at RHIC is in many ways similar to the work of inspectors of the National Safety and Transportation Board, who after a plane crash will collect thousands of pieces of evidence to reconstruct what happened and determine the cause of the accident. The scientists at RHIC collect thousands of pieces of debris from the quark-gluon plasma and try to piece together a puzzle that can be used to determine some of the properties of this new state of matter.

THE RHIC EXPERIMENTS

Four different experiments are operating simultaneously at RHIC when ions are stored in the rings. Although the experiments have a common goal, namely identifying and studying the properties of the quark-gluon plasma, they differ in their approach and the techniques used. As a consequence, the RHIC experiments complement each other, and their combined results will provide a wealth of information about the properties of the quark-gluon plasma. In the experiments, the properties of the reaction products are determined by measuring the energy they lose or the radiation they emit when they travel through known amounts of materials, by measuring their velocity, and/or by observing how they bend in applied magnetic fields.

The four RHIC detectors have one component in common: a pair of zero degree calorimeters (ZDCs). The ZDCs are small devices located downstream of each of the experiments, behind a dipole magnet. They detect the neutral particles produced in each collision; the charged particles are swept away by the magnetic field of the dipole magnet and thus do not reach the zero degree calorimeters. The ZDCs are used to measure the centrality of each collision and the luminosity of the beams. In addition, these detectors can be used to

compare the results obtained by the different RHIC experiments on an equal footing, by using the ZDCs as a tool to select the same class of events in different detectors.

The BRAHMS detector is shown schematically on page 4. BRAHMS features two spectrometers that can be rotated, in small steps, around the interaction point. The spectrometers have a variable magnetic field and various tracking and energy-loss counters to determine the properties of the incident charged particles. The insets in the figure show data collected by some of these tracking counters in one of the first collisions observed by BRAHMS. Several tracks are evident, all of which originate from a common point where the collision between the gold ions occurred. The BRAHMS spectrometers have a small opening angle, and for a typical collision only a few particles are detected. However, the properties of these charged particles, such as their momentum and energy, are measured very precisely. About 50 people from eight countries are members of the BRAHMS collaboration.

The STAR detector is shown schematically on page 5. It utilizes a large 4 meter diameter time projection chamber that provides tracking and particle identification capabilities for hadrons over a large solid angle. Almost all charged particles, except those emitted very close to the direction of the beam, are detected in the time projection chamber. Charged particles traveling through it deposit some of their energy along their track, which is measured and recorded using sophisticated electronics. The measured energy loss can be used to identify the charged particles and to visualize their tracks. The radius of curvature of these tracks in the magnetic field, generated by the large solenoid that surrounds the time projection chamber, is used to determine the momentum of the hadrons. An example of the measured tracks in the time projection chamber generated by one of the first collisions observed by STAR is shown on page 5 and on the cover. The volume of data collected by this detector during a typical event is enormous, about 16 megabytes, and due to limitations of computer power and data storage, only one collision event per second can be processed and recorded. When RHIC reaches its design luminosity and energy, about 200 collisions will occur every second, and, as a consequence, the STAR trigger electronics must decide within a few microseconds after each collision whether or not to record the data collected. Over 400 scientists and engineers from seven

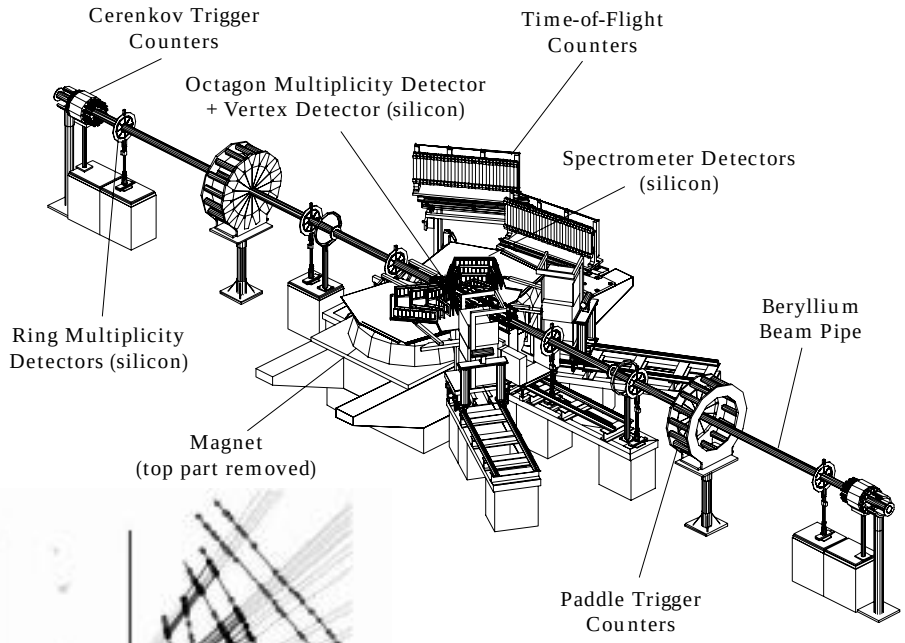

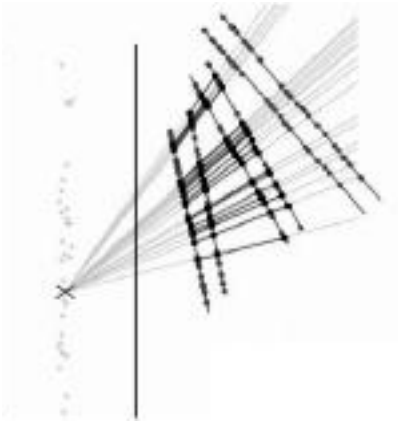

The PHOBOS detector system. The event display on the bottom left-hand side shows reconstructed tracks, based on hits recorded in the first six layers of the spectrometer, for one of the first collisions observed at PHOBOS on June 12, 2000.

On The Web

For related information on this topic refer to the following Internet addresses:

http://teacher.pas.rochester.edu/
(author's home page)

http://www.rhic.bnl.gov/
(home page of the Relativistic Heavy-Ion Collider)

http://www.rhic.bnl.gov/brahms/WWW/brahms.html
(home page of the BRAHMS collaboration)

http://www.star.bnl.gov/STAR/
(home page of the STAR collaboration)

http://www.rhic.bnl.gov/phenix/
(home page of the PHENIX collaboration)

http://phobos-srv.chm.bnl.gov/
(home page of the PHOBOS collaboration

http://www.rhic.bnl.gov/html2/tour.html
(virtual tour of the RHIC facility)

http://www.pubaf.bnl.gov/pr/bnl-pr060800.html
(news release of the observation of the first collisions at RHIC)

countries are members of this collaboration.

The PHENIX detector is shown schematically on page 6. It is the only RHIC experiment that focuses on the detection of photons, electrons, and muons. In a typical collision, several hundred of these will enter the detector where their properties are measured. The properties of the muons are studied using two forward muon arms, where the particles are tracked and identified. The total energy carried away from the collision by the leptons in directions perpendicular to the beam is measured with an electromagnetic calorimeter that surrounds the interaction point. The track of each detected lepton is determined using the information provided by various tracking and imaging detectors that are located between the interaction point and the electromagnetic calorimeter. The tracks recorded for one of the first collisions observed by PHENIX are also shown in the illustration on page 6. These tracks all point toward the collision point. Over 450 scientists and engineers from 10 countries are members of the PHENIX collaboration.

The PHOBOS detector is shown schematically on page 7. It features a number of different silicon-based detector systems and various plastic scintillators. Each collision is characterized by measuring the total multiplicity of charged particles, over virtually all phase space, using a silicon multiplicity detector. About 1 percent of the total number of charged particles enter a silicon spectrometer, located in a strong magnetic field, where their energy loss, momentum, and velocity are measured. The spectrometer is capable of identifying charged particles down to very low transverse momenta. The reconstructed tracks observed in one of the first collisions observed at PHOBOS are shown in the inset in the figure on the previous page. Since the data volume for a typical event is rather small, about 18 kilobyte, PHOBOS can take data at minimum bias at full RHIC luminosity. About 70 scientists and engineers from three countries are members of this collaboration.

WATCH OUT FOR 2001

The first physics run, completed in September 2000, provided all experiments with a wealth of data on the properties of nuclear collisions at unprecedented energies. RHIC operation will resume in the middle of 2001, with an increase in luminosity and energy. It is expected that by the end of summer 2001, collisions between gold ions with an energy of 100 GeV per nucleon will occur routinely, and the Big Bang will be recreated on Long Island several times per second.

FREE THE QUARKS

by KRISHNA RAJAGOPAL

QUANTUM CHROMODYNAMICS, or QCD, is the theory of quarks and gluons and their interactions. Its equations are simple enough to fit on the back of an envelope. After a quick glance you might conclude that QCD is not very different from the theory of electricity and magnetism called quantum electrodynamics, or QED, which describes the behavior of electrons—for example, those in the beams within any television set or computer monitor—and the photons they interact with. The laws of QCD describe particles called quarks, which are similar to electrons except that, in addition to electric charge, they carry new charges whimsically called "colors." Their interactions involve eight new photon-like massless particles called gluons, representing eight new "color-electric" and "color-magnetic" fields. A glance at the equations of QCD suggests that they describe beams of quarks, new color forces with macroscopic range, and gluon lasers. This first impression would be wrong.

QCD describes protons, neutrons, pions, kaons, and many other subatomic particles collectively known as hadrons. A hadron has two important properties: it is "color-neutral," and it is much heavier than the quarks inside it. For example, the proton is often described as made of two up quarks and one down quark. Indeed, this combination of quarks has

Six Different Quarks

TO DATE, six different quarks have been discovered. Two quarks—up and down—are light: only about 10 times heavier than the electron. Up quarks, down quarks, and the massless gluons are the main constituents of pions, protons, and neutrons. The proton mass is 938 MeV while the sum of the masses of two up quarks and one down quark is about 20 MeV. The strange quark is the next heaviest quark, with a mass about 20 times that of the up and down quarks. Although strange quarks do play an important role in heavy ion collisions, this article focuses on the lighter up and down quarks. The three heaviest quarks—charm, bottom, and top—are heavy enough to be left out of this article.

Quarks	Approximate Mass(MeV/c)
up (*u*)	5
down (*d*)	10
strange (*s*)	150
charm (*c*)	1,300
bottom (*b*)	4,200
top (*t*)	175,000

exactly the right electric charge (+1) and color (0) to describe a proton. But, a proton weighs about 50 times as much as these three quarks! Thus a proton (or a neutron, or any other hadron) must be a very complicated bound state of many quarks, antiquarks, and gluons (with three more quarks than antiquarks). QCD describes how the light quarks and massless gluons bind to form these complicated but colorless packages that turn out to be so heavy. It also describes how these hadrons themselves bind to form the atomic nuclei. Thus QCD describes the physics of everything that makes up our quotidian world with the exception of the electrons and photons. And yet we have never seen a beam of quarks or a gluon laser. How, then, does the reality that QCD describes turn out to be so different from what a glance at its laws seems to suggest?

The answer to this question relies on our understanding of the properties of the vacuum. Furthermore, we shall see that our naive first impressions are actually correct at temperatures above two trillion degrees kelvin. At such ultrahigh temperatures, the stuff that QCD describes does indeed look like a plasma of free quarks and gluons. The entire Universe was at least this hot for the first 10 microseconds after the Big Bang. Thus the goal of heavy-ion collision experiments is to heat up tiny portions of the Universe to recreate these conditions in order to study QCD by simplifying it.

IN A UNIVERSE governed by the laws of quantum mechanics, the vacuum is not empty. All states are characterized by quantum-mechanical fluctuations, and the vacuum is just the state in which these fluctuations happen to yield the lowest possible energy. In QCD, the vacuum is a frothing, seething sea of quarks, antiquarks, and gluons arranged precisely so as to have the minimum possible energy.

QCD describes excitations of this vacuum; indeed, we are made of these excitations. In order to understand how they turn out to be the colorless and heavy hadrons, instead of colorful and light quarks and gluons, one must better understand several striking properties of the QCD vacuum.

According to QCD, the force between quarks is actually rather weak as long as the quarks are close together, closer than 1 fermi. (One fermi, or 1 F, equals 10^{-15} meters—or approximately the size of a proton.) This weakness of the force between nearby quarks, called "asymptotic freedom" by its discoverers David Gross, Frank Wilczek, and David Politzer, explains how we can "see" quarks at all. A microscope sufficiently powerful that it can look within a proton with a resolution much smaller than 1 F allows one to observe weakly interacting quarks. The first sufficiently powerful microscope was the SLAC linear accelerator; quarks were first seen using this device in experiments conducted in the late 1960s by Jerome Friedman, Henry Kendall, Richard Taylor, and their collaborators.

Asymptotic freedom is a property of the QCD vacuum, which describes how it responds to an "extra" quark. This quark disturbs (polarizes) the nearby vacuum, which responds by surrounding it with a cloud of many

quark-antiquark pairs and gluons. In particular, this cloud acts so as to ensure that the force between this quark and another quark (surrounded by its own cloud) does not lessen as one tries to separate the quarks. Pulling a single, isolated quark completely out of a colorless hadron requires working against a force that does not weaken with increasing separation and therefore costs infinite energy. Thus the energy of a single quark (or of any excitation of the QCD vacuum that has nonzero color) is infinite, once one includes the energy cost of the resulting disturbance of the vacuum. Adding a colorless combination of quarks to the vacuum disturbs it much less, creating a finite energy excitation. Real excitations of the QCD vacuum must therefore be colorless.

To understand why hadrons are heavy, we need a second crucial, qualitative, feature to describe the QCD vacuum. We must specify what fraction of the quark-antiquark pairs at any location is $u\bar{u}$, $d\bar{d}$, $u\bar{d}$ or $d\bar{u}$. At each point in space, the vacuum is therefore described by a "vector" that can point any direction in an abstract four-dimensional space with axes labeled $u\bar{u}$, $d\bar{d}$, etc. In order to achieve the lowest energy, QCD predicts that all these vectors must be aligned. A sea of quark-antiquark pairs so ordered is called a "condensate." The fact that the arrows must pick one among many otherwise equivalent directions is known as symmetry breaking. The condensate that characterizes the QCD vacuum is much like a ferromagnet, within which all the microscopic spin vectors are aligned (see illustration above right).

If we add quarks to the QCD vacuum, they interact with this quark-antiquark condensate, and the result is that they behave as if they have a large mass. Thus the presence of a hadron disturbs the condensate, and the largest contribution to the mass of the hadron is the energy of this disturbance. In effect, the condensate slows the quarks down, and because of its presence, hadrons are much heavier than the quarks of which they are made. (See the box "On the Origin of Mass" on the next page.)

There is one exception to the dictum that hadrons must be heavy. Because QCD does not specify in which direction the arrows point, it should be relatively easy to excite "waves" in which the directions of the arrows ripple as a wave passes by. In quantum mechanics, all such waves are associated with particles, and because these waves are easily excited, the related particles should not have much mass. This exception was first understood in 1961 by Yoichiro Nambu and Jeffrey Goldstone. The requisite particles, the well-known pions, weigh in at about one-seventh of the proton's mass.

Thus the QCD vacuum is a complex state of matter. The laws describing it are written in terms of colored quarks and gluons, but its natural excitations are colorless hadrons, which are heavy because of their interaction with a symmetry-breaking condensate that pervades all of space.

ONE GOOD WAY of testing our understanding of the QCD vacuum is to create new, simpler, states of matter (often called phases) in which QCD behaves

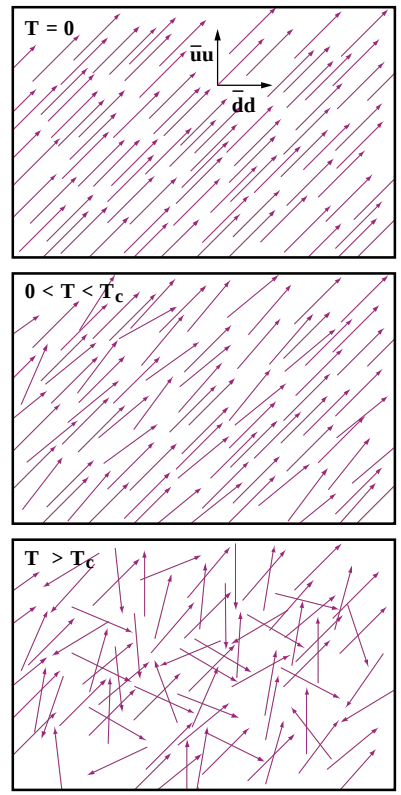

Melting the Vacuum. (Top) The QCD vacuum is a condensate. At each location are quark-antiquark pairs whose type must be specified by an arrow indicating what fraction of the pairs are $u\bar{u}$ versus $d\bar{d}$ versus $u\bar{d}$ versus $d\bar{u}$. Only two of these four directions are shown. The central property of a condensate is that all the arrows are aligned. (Middle) At non-zero temperatures, the arrows describing the condensate begin to undulate. These waves can equally well be described as a gas of particles, called pions. (Bottom) As the temperature increases, the waves on the condensate become more and more violent. Above some critical temperature, the arrows are completely scrambled, and the condensate has melted.

On the Origin of Mass

THE VACUUM in which we live is actually filled with two condensates: a quark-antiquark condensate required by QCD and another of Higgs particles required by the weak interaction. If neither condensate were present, both quarks and protons would be massless. The quarks get their (light, but non-zero) mass from their interaction with the Higgs condensate; about 1/50th of the mass of protons and neutrons is due to its presence. The remainder of the mass of protons and neutrons (and of all hadrons) is due to the presence of the quark-antiquark condensate.

as expected on first glance. Is there a phase of matter in which quarks can roam free? In which the excitations are closer to being individual quarks and gluons rather than the complicated packages we call hadrons?

Asymptotic freedom provides two ways to free the quarks. The first is to squeeze nuclei together until their protons and neutrons overlap. In the resulting "quark matter" the quarks are close together, and therefore interact only weakly. The second approach is to take a chunk of matter and heat it. When you heat a magnet, by analogy, the spins in the magnet start to oscillate; eventually, above some critical temperature, they oscillate so wildly that the spins all point in random directions, and the magnet loses its magnetization. Something similar happens in QCD. At low temperatures, the arrows that describe the QCD condensate ripple, yielding a gas of pions. Above a critical temperature, the arrows oscillate so wildly that they point randomly, and the condensate "melts." Above its critical temperature, the matter described by QCD is more disordered but more symmetric (no direction favored in the illustration on the previous page) than the QCD vacuum.

Theoretical calculations that strain the world's fastest supercomputers show that at a temperature of about 2×10^{12} K the QCD condensate should melt and the hadrons "ionize," yielding a plasma in which the quarks are free. Once the condensate melts, hadrons need no longer be heavy, and a putative gas of them would have so many hadrons and antihadrons that these would overlap, making it impossible to tell them apart. What actually occurs (see box on the opposite page) is a phase transition to a plasma of quarks, antiquarks, and gluons. At low temperatures, QCD describes a gas of pions. Once the condensate melts, this pion gas ionizes, releasing quarks and gluons that are lighter, more numerous (three colors of each of up, down, and strange quarks plus their antiquarks and eight types of gluons) and therefore have a much larger energy density at a given temperature.

WE NOW HAVE the necessary tools to describe the prominent features on the phase diagram of QCD (see illustration on page 14). At low densities and temperatures, we find the familiar world of hadrons. The only known place in which nuclei are squeezed together without being heated is the center of neutron stars. The cores of these extraordinarily dense cinders, with masses about that of the Sun but with radii of only about 10 km, may be made of superconducting quark matter.

To find a phase of matter in which QCD simplifies completely and the excitations are only quarks and gluons, we must explore the high-temperature regions of the phase diagram. Upon heating any chunk of matter to trillions of degrees, the vacuum condensate melts, the hadrons ionize, and the quarks and gluons are free to roam in the resulting quark-gluon plasma. The Universe began far up the vertical axis of the diagram: at its earliest moments, shortly after the Big Bang, it was filled with a very hot quark-gluon plasma that expanded and cooled, moving down the vertical axis, falling below

2×10^{12} K after about 10 microseconds. Since then, quarks have been confined in hadrons with the possible exception of quarks at the centers of neutron stars and those that are briefly liberated in heavy-ion collisions.

IN A HEAVY-ION collision, two nuclei accelerated to enormous energies are collided in an attempt to create a tiny, ultrahot region within which matter enters the quark-gluon plasma phase. As in the Big Bang (but much more quickly) this quark-gluon plasma droplet expands and cools, moving downward on the phase diagram. For a brief instant the quarks are free, but their liberation is short lived. After about 10^{-22} second they recombine to form an expanding gas of hadrons, which rattle around as they expand for perhaps another 10^{-22} second. After that these hadrons are so dilute that they fly outwards without further scattering, to be seen in a detector. The STAR and PHOBOS detectors at Brookhaven National Laboratory (see previous article, "Creating a Little Big Bang on Long Island," by Frank Wolfs) record many thousands of hadrons the end products of a collision in which quark-gluon plasma may have been created.

The purpose of these heavy-ion collision experiments is twofold. We hope to create a region of quark-gluon plasma the stuff of the Big Bang—and measure its properties to see whether the complexities of the QCD vacuum have truly melted away. And, we hope to study how matter behaves as it undergoes the transition from this plasma back to a mundane hadron gas.

For the last five years, the highest-energy heavy-ion collisions occurred in experiments done at the Super Proton Synchrotron (SPS) at CERN. But in June 2000, the first collisions occurred at Brookhaven's new Relativistic Heavy Ion Collider (RHIC) whose collisions are about 10 times more energetic. What does this big energy increase buy? It boosts the initial energy density, and thus the initial temperature, pushing further upward into the expected quark-gluon plasma region of the phase diagram. In addition, these higher energy collisions produce many more pions, diluting the net quark density. As we build more energetic heavy-ion colliders, therefore, we explore upwards and to the left on the phase diagram, more closely recreating the conditions of the Big Bang. To date, we have only the first, simplest analyses of collisions at RHIC, but it is already clear that these collisions have higher initial energy densities and lower net quark densities than at the SPS.

The intriguing SPS results reveal several aspects that are difficult to model using only the physics of hadrons. One example is the paucity of J/Ψ particles, which include one charm and one anticharm quark. As charm quarks are heavy, they are produced only rarely in a heavy-ion collision. Those few that do occur arise from the earliest most energetic quark-quark collisions. If a charm and anticharm quark are created in

Melting the Vacuum

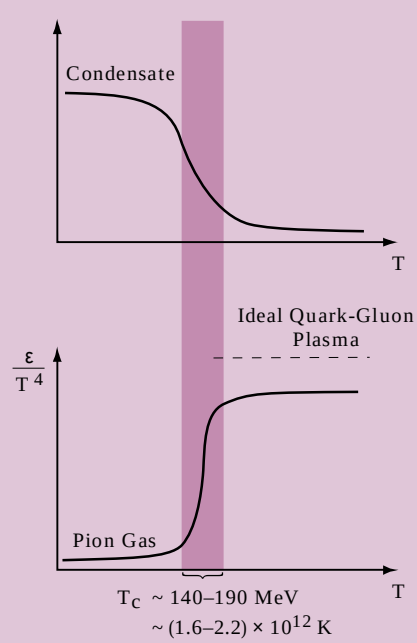

(*Top*) The strength of the condensate (the "vector average" of all the colored arrows in the illustration on page 11) decreasing with increasing temperature. The shape of this curve mirrors that of an analogous curve showing how magnetization vanishes when the spins in a magnet get scrambled at a temperature of only a few hundred degrees. (*Bottom*) The higher the temperature (T), the more energy per unit volume (ε). The ratio ε/T^4 is a measure of how many different types of particles are present. ε/T^4 rises rapidly from the value for a pion gas to close to the value for an ideal quark-gluon plasma in which the interactions between quarks and gluons have become weak. This rise directly reflects the freeing of the quarks.

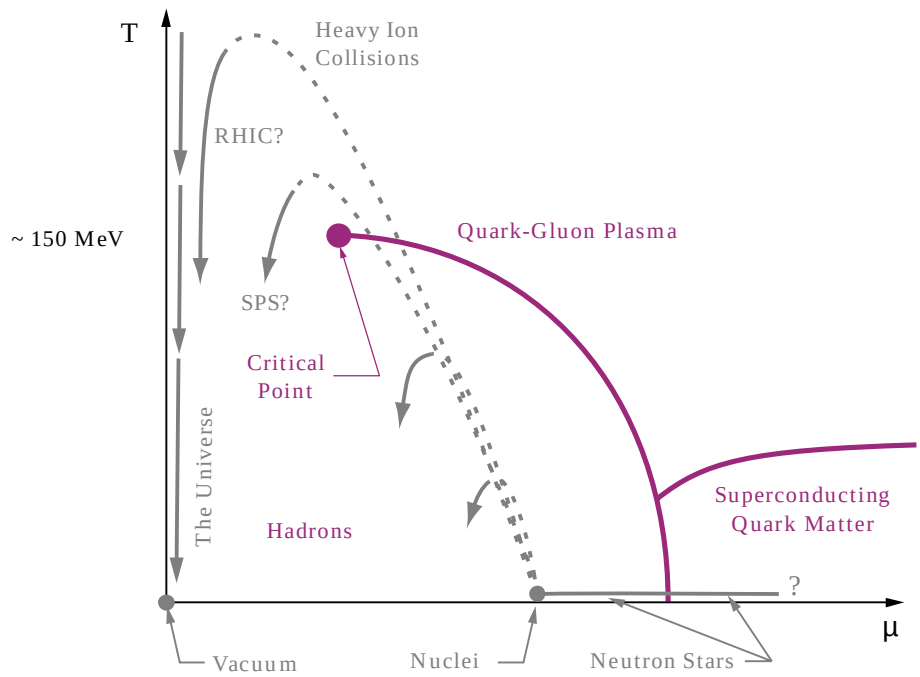

Phases of QCD as a function of temperature and μ, a quantity that is a convenient measure of the net quark density, namely the density of quarks minus that of antiquarks. The vacuum is at the bottom left; nuclei have non-zero net quark density. Squeezing nuclei without heating them pushes matter to the right on the diagram, while heating matter pushes it up. The colored line separating the quark-gluon plasma from the hadronic phase ends at a critical point.

a quark-gluon plasma (wherein they are free to wander), they are unlikely to find each other and form a J/Ψ. The striking paucity of J/Ψ particles in measurements by the NA50 experiment at the SPS is therefore quite interesting. Further experiments by NA50 and the PHENIX experiment at RHIC should help to resolve remaining ambiguities in the interpretation of these data. One interpretation is that the SPS heavy-ion collisions are exploring the crossover region in the phase diagram (the colored "in-between region" in the illustration on the previous page), where QCD is not well described either as a gas of hadrons or as a quark-gluon plasma. How can we test this hypothesis?

One idea uses the fact that higher energy collisions cool by passing through the phase transition region farther to the left. Near the vertical axis of the phase diagram (traversed by the Big Bang and by the highest energy collisions), the phase transition from quarks to hadrons occurs smoothly and continuously. It is therefore quite different from the boiling of water, which occurs at a sharply defined temperature at which its properties change sharply. Theoretical arguments suggest that at higher net quark density, the phase transition between quark-gluon plasma and hadrons is similarly discontinuous and can be shown in the illustration on the left as a sharp line. This line ends at what is called the "critical point."

There are phenomena that occur at the critical point and nowhere else on the phase diagram. At this point, the arrows of the figure on page 13 undulate in a unique, precisely calculable, manner. Consequently, distinctive fluctuations occur in those heavy-ion collisions that pass near the critical point as they cool. For example, the mean momentum of the 100 lowest-energy pions in a collision should vary enormously from one collision to the next. The NA49 experiment at the SPS has done a careful search for such fluctuations but has not seen any. The search for the critical point continues, with RHIC exploring to the left in the illustration above and new lower energy SPS collisions exploring further to the right. Early indications are that fluctuations in RHIC collisions are an order of magnitude larger than those at the SPS, but it remains to be determined whether these have the characteristic features that would signal the discovery of the critical point.

In addition to studying the transition between quark-gluon plasma

and hadrons, we wish to use heavy-ion collisions to measure properties of the newly created quark-gluon plasma itself. To do so, we need observables that tell us about the earliest, hottest, moments of a collision. One simple way is to shoot a very fast quark through the plasma and watch how rapidly it loses energy. Estimates suggest that a quark plowing through such a plasma loses much more energy than it would if it encounters only heavy, colorless hadrons. We search for signs of this rapid energy loss by looking for a paucity of 5–10 GeV pions emerging from a heavy ion collision. Any such energetic pions must have originated as a fast quark. If these quarks have to fight their way through a quark-gluon plasma, they will lose energy and thermalize, and consequently very few 5–10 GeV pions will be seen, relative to what occurs in proton collisions.

Despite best efforts, however, no evidence of such a deficit has been seen at the SPS. Perhaps the most exciting announcement at the recent Quark Matter conference was that preliminary data from both the STAR and PHENIX experiments show about 5 times fewer energetic pions than expected. With time, this observation should become a quantitative measure that will allow us to test whether high temperature QCD indeed describes a quark-gluon plasma—and to test predictions of its properties.

We wait with great interest, hoping that experimenters soon confirm they are regularly recreating the very stuff of the Big Bang. As they then begin to measure its properties, we shall learn whether QCD behaves as expected. If the vacuum condensate melts and hadrons ionize, freeing the quarks, we shall have realized the dream of simplicity implicit in the laws of QCD.

Precision in Collision: Dis

by BRUCE SCHUMM

Exacting measurements of a central parameter in the Standard Model are providing tantalizing hints that the discovery of the elusive Higgs boson may be just around the corner.

IN A 1963 LECTURE on the makings of a good scientific theory, Nobel laureate Richard Feynman compared Newton's law of gravitation to a hypothetical theory of celestial mechanics based on the influence of "oomph"— a fanciful motive quality possessed by the planets that, in its vagueness, could be deemed responsible for any observed behavior of the solar system. Newton's theory is much preferable, Feynman observed, because the smallest disagreement with its precise predictions of celestial motion could prove it wrong. For the Theory of Oomph, however, "the planets could wobble all over the place, and . . . you could say 'Well, that is the funny behavior of the oomph.' So, the more specific the rule, the more powerful it is, the more liable it is to exceptions, and the more interesting and valuable it is to check."

In exactly this spirit, two communities of physicists—one based at SLAC and another at the pan-European CERN laboratory, set out on complementary paths to test the Standard Model of particle physics with knife-edge precision. For the Standard Model, with its definitive relations between its basic physical quantities, fits Feynman's criterion to a 'T.' It stands as our leading theory of fundamental interactions, forming the very core of our current ideas about causation in the subatomic world. And, perhaps best of all, it incorporates into its structure a number of ideas that profoundly affect the way we view the world in which we live.

Foremost among the revelations suggested by the Standard Model is the notion that, for indivisible fundamental

secting the Standard Model

particles, mass is merely an illusion, induced by the swirling of eddy currents in an all-pervasive underlying field called the "Higgs" field. Hardly a theory of oomph, the existence of the Higgs field has a number of clearly predicted consequences, the most direct of these being an entirely new type of interaction between matter particles that should become appreciable as their energy of interaction gets very large. In much the same way that a game of catch between two ice skaters can cause them to drift apart, this new interaction is mediated by an exchange between the matter particles. In this case, though, the game is played with an odd sort of ball—a new particle known as the "Higgs boson," with properties unlike those of any known particle.

In 1983, as the LEP and SLC programs began construction at CERN and SLAC, the Higgs boson seemed far away indeed. The more immediate goal was to put the Standard Model through its paces with a rigorous examination of its exacting quantitative relations. In this way, the physicists hoped to find the

smallest disagreement that would lead to the next leap forward in predictions of the Standard Model—or to rule out, by its absence, possible new paradigms of natural order dreamt up by ever-creative theoretical physicists. But, through a healthy competition between the two labs, tempered by mutual support and a free exchange of ideas and personnel, the precision of these tests has exceeded expectations to such a degree that the potential effect of the new Higgs interaction is now beginning to enter the picture.

As this article goes to press, the last chapter in this story—the compilation and combination of the finalized results of these precision tests—is nearing completion in a collaborative effort between the SLAC and CERN precision-measurement groups. The unprecedented accuracy of this combined result is providing what may be an early hint of the imminent discovery of the Higgs boson.

There is thus a strong suggestion that particle physics is poised on the verge of one of the most profound of its many discoveries.

WHAT IS particularly amazing about these studies is their capacity to extract measurements of exquisite precision from the relative chaos of high energy particle collisions. As experimental physicists, we squint and cover our ears as potentially lethal beams of matter and antimatter collide, producing miniature explosions of a concentration not seen since the instant of the Big Bang. And yet, using our computer-aided powers of vision, we can determine certain properties of these collisions with authoritative accuracy.

At the heart of much of this experimentation lies the notion of parity violation. Consider a carefully controlled experiment that, say, measures the annihilation rate of high energy electrons and positrons into the *Z* boson—one of two possible "balls" (the other being the electrically charged *W* boson) whose exchange mediates the obscure but essential weak nuclear force. Now, consider a second, parity-inverted experiment, arranged as a mirror-reflection of the first experiment, but alike in every other way. Common sense suggests that the annihilation rate in the second experiment should be identical to that of the first, but such is not the case. In this sense, the interaction of matter with the *W* and *Z* bosons, and thus the weak interaction itself, violates symmetry under such a parity inversion.

Specifically, the aspect of the experimental setup that is altered under mirror reflection is the handedness of the incoming electrons and positrons. Electrons "spin" about their axes; if this spin is seen to be clockwise as the particle recedes from the viewer, the particle is deemed to be right-handed, while a left-handed particle spins counterclockwise. Mirror reflection preserves the sense of the electron's spinning motion while reversing the direction of its flight, thus exchanging left-handed for right-handed electrons, and vice versa.

Experiments performed in the late 1950s, interpreted in the context of today's Standard Model, demonstrate that W bosons interact exclusively with left-handed electrons: the *W* simply refuses to consort at all with right-handed electrons. So the mirror-reflection of a reaction originally involving left-handed electrons and *W* bosons will be a reaction involving *W* bosons and right-handed electrons, and is forbidden from taking place. In this sense, weak nuclear interactions mediated by the *W* boson are said to exhibit complete, or maximal, parity violation.

Such, however, is not the case for weak interactions mediated by the *Z* boson. The electrically neutral *Z* is much like a massive photon—the indivisible quantum of light that we now know to be the "ball" that is exchanged in electromagnetic interactions. However, while the photon has no preference for handedness, the weak-force *Z* boson does exhibit a preference—but only a partial one—for left-handed particles over right-handed ones.

In the Standard Model the extent of this "mixing" of the parity-violating weak and parity-respecting electromagnetic interactions (to provide a weak-force mediating *Z* boson that exhibits partial parity violation) is characterized by a quantity known as the "weak mixing angle" θ_W, commonly expressed in terms of the square of its trigonometric sine: $\sin^2\theta_W$. Since the sine function (and thus also its square) varies from 0 to 1, $\sin^2\theta_W$ acts as a convenient way to express

the extent to which the Z is composed of parity-respecting as opposed to parity-violating components.

For example, a value of $\sin^2 \theta_W = 0$ would correspond to a Z boson made up entirely of the stuff of the parity-violating weak force. Like the W boson, such a Z boson would mediate weak interactions that violate parity completely—it would only permit left-handed matter particles to interact. In fact, though, $\sin^2\theta_W$ has a value of about 0.2, meaning that about 20 percent of its composition is electromagnetic-like. This admixture ensures that the Z will have some small degree of interest in right-handed matter particles. It thus will exhibit parity violation that is not quite complete.

The essential point is this: once the mass of the Z boson and the overall strengths of the weak and electromagnetic forces have been determined, then $\sin^2\theta_W$, and thus the exact degree of the Z's preference for left-handed over right-handed matter particles, is precisely predicted by the formalism of the Standard Model. Exacting measurements of the relative interaction rates of the Z boson with right- and left-handed quarks and leptons comprise the most precise test ever done of the Standard Model.

DURING THE 1990s, two electron-positron colliders ran at precisely the energy necessary to produce Z bosons. Between 1989 and 1995, the Large Electron-Positron (LEP) collider at CERN produced over 15 million Z's, whose decays were recorded by the ALEPH, DELPHI, L3, and OPAL detectors. The pioneering Stanford Linear Collider (SLC) at SLAC produced just over half a million Z boson events between 1989 and 1998, recorded by the SLD detector (and the earlier Mark-II detector). Unlike LEP, however, the SLC was able to run with a preponderance of its electrons polarized either right- or left-handed, depending on the whim of a random trigger.

With their commanding data samples, the LEP experiments were quick to measure the Z boson mass by finding the precise energy at which the rate of electron-positron annihilation to the Z was greatest. This study yielded the remarkably accurate result $M_Z = 91.1874 \pm 0.0021$ GeV/c^2. Combined with even more exacting measurements of the strengths of the weak and electromagnetic forces, this result led to the prediction $\sin^2 \theta_W = 0.21215 \pm 0.00001$. The stage was thus set for a precise test of the Standard Model via parity violation measurements.

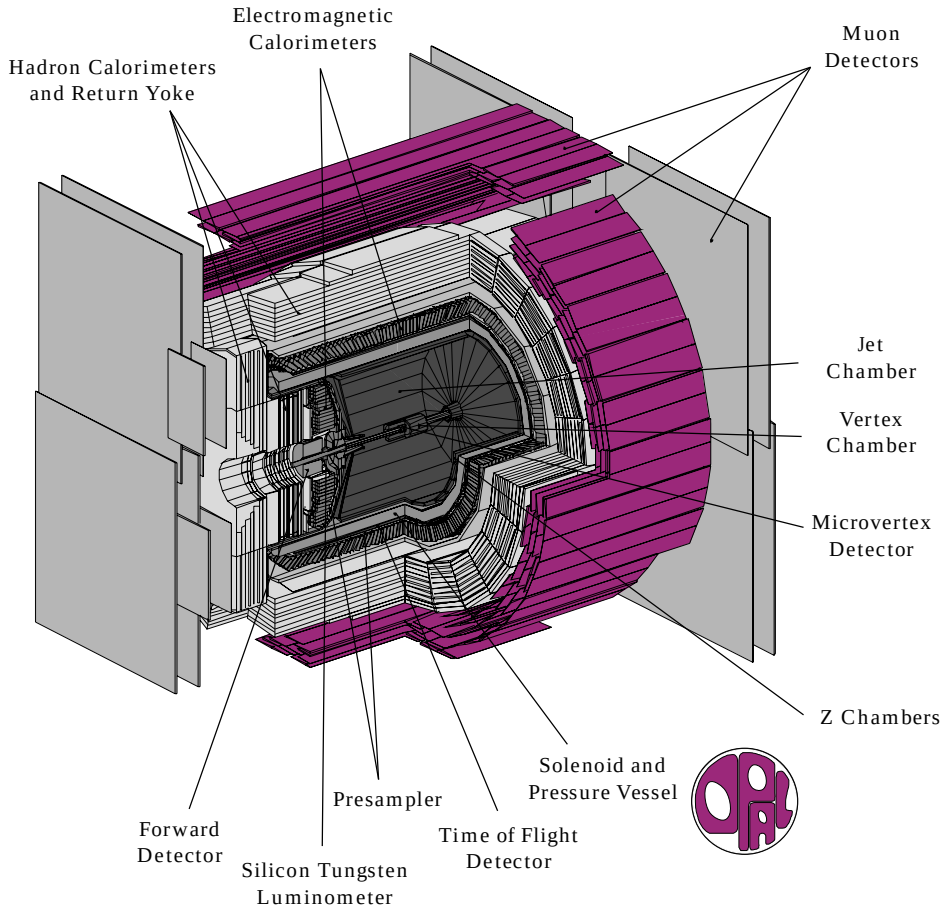

The OPAL (Omni-Purpose Apparatus at LEP) detector is typical of the five detectors built at CERN to study the physics of the Z boson.

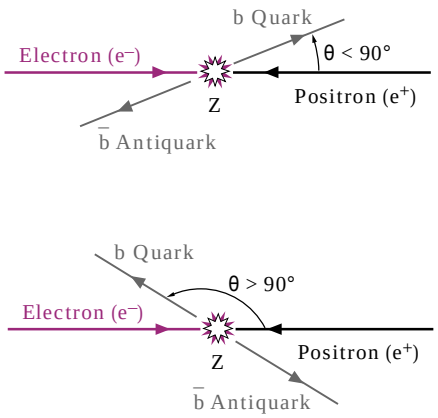

Measuring $\sin^2\theta_W$ *via the forward-backward asymmetry in the reaction* $e^+e^- \rightarrow b\bar{b}$. *If the angle* θ *between the* b *quark and the continuation of the electron's path is less than 90 degrees, the event is deemed forward; if* θ > 90 *degrees, the event is backward. The difference (asymmetry) in the rates of the forward and backward reactions depends on the degree of parity violation in the interaction of the Z with both the electron and the* b *quark, and thus provides a measurement of* $\sin^2\theta_W$.

Given the relationship between handedness and parity, the most direct way to measure the degree of parity violation in the interaction of the *Z* boson with matter is to measure the difference—or asymmetry—in the production rates of the *Z* with left- and right-handed electron beams. This "left-right asymmetry" measurement has much to recommend it: the result depends very heavily on the precise value of $\sin^2\theta_W$, while its dependence on potential sources of experimental error, such as limitations in the apparatus detecting the decaying *Z* bosons, is very weak. The real challenge lies in getting the electron beam to be highly polarized—and in measuring the polarization accurately. The SLD collaboration did both of these admirably, polarizing about 75 percent of the electrons in the beam and measuring that percentage to a relative accuracy of five parts per thousand (see the Spring 1995 edition of the *Beam Line*, Vol. 25, No. 1 for an in-depth discussion of SLD's left-right asymmetry measurement). In addition to permitting the most precise measurement of $\sin^2\theta_W$ to date, both of these achievements have set new standards for electron beam polarization.

Luckily for the LEP team, there are a number of other ways to measure $\sin^2\theta_W$ that instead make use of the decay properties of the *Z* boson and do not require a polarized electron beam. The decay of the tau (τ) lepton (an unstable heavier cousin of the electron) is simple enough that it can be used to determine their handedness when they occasionally result from the decay of the *Z*. In this way, $\sin^2\theta_W$ can be measured from the handedness preference of the interaction of the *Z* with the τ lepton. A second approach is to measure the "forward-backward asymmetry"—the rate at which quarks or leptons from *Z* boson decay emerge in the same general direction as the electron beam, relative to the rate for those heading in the opposite direction (see the diagram on the left).

The precise determination of these *Z* boson properties required the development of state-of-the-art particle detectors, such as LEP's OPAL detector (see illustration on page 19). For a *Z* boson decaying into a quark-antiquark pair, about 20 charged and a similar number of neutral particles emanate from the electron-positron collision point in the center of the detector, typically in two back-to-back cones known as jets. OPAL's jet chamber reconstructs the path and momentum of each charged particle as it curls its way through the detector's magnetic field, while the vertex detector adds a few ultraprecise measurements close to the collision point so that its exact point of origin can be precisely determined. Since particles containing bottom (*b*) and charmed (*c*) quarks travel 1–2 millimeters before decaying into a multiplicity of detectable particles, this point-of-origin information can be used to identify events for which the *Z* decayed into *b* and *c* quarks. The time-of-flight and muon detectors help to establish the identity of the individual charged particles, while the layers of calorimetry determine the energy and direction of both charged and neutral particles.

For example, events with a *b* quark and $\bar{b}$ antiquark from the decay of a *Z* boson can be identified using point-of-origin information from

the vertex detector. Determination of which of the two jets contains the negatively-charged b quark (as opposed to the positive $\bar{b}$ antiquark) comes from the identification of particular subatomic particles (a muon or kaon) whose negative charge establishes it as having come from a b decay. With the angle θ of the b quark's jet relative to the electron beam direction determined by the calorimetry, the excess of forward-going ($\theta < 90°$) versus backward-going ($\theta > 90°$) b quarks from Z decay the b-quark forward-backward asymmetry can be precisely determined.

The combined results of all these measurements, after conversion to the common currency of $\sin^2\theta_W$, yields $\sin^2\theta_W = 0.23156 \pm 0.00017$ (see the illustration at upper right). This impressive result represents a vast improvement in accuracy by a factor of about 300 over that of measurements available prior to the beginning of the program. But when compared to the prediction $\sin^2\theta_W = 0.21215$, the disagreement is substantial!

THE RESOLUTION of this apparent theoretical failure lies at the very heart of quantum mechanics, for this Standard Model prediction naively ignored the fact that according to the Heisenberg Uncertainty Principle the Z boson can temporarily fluctuate into a complementary pair of quarks or leptons as it mediates a weak interaction process (see the diagrams on the next page). Such "virtual pairs" slightly alter the properties of the Z boson in a way that can be precisely calculated provided that the identity and mass of each possible participating particle is known.

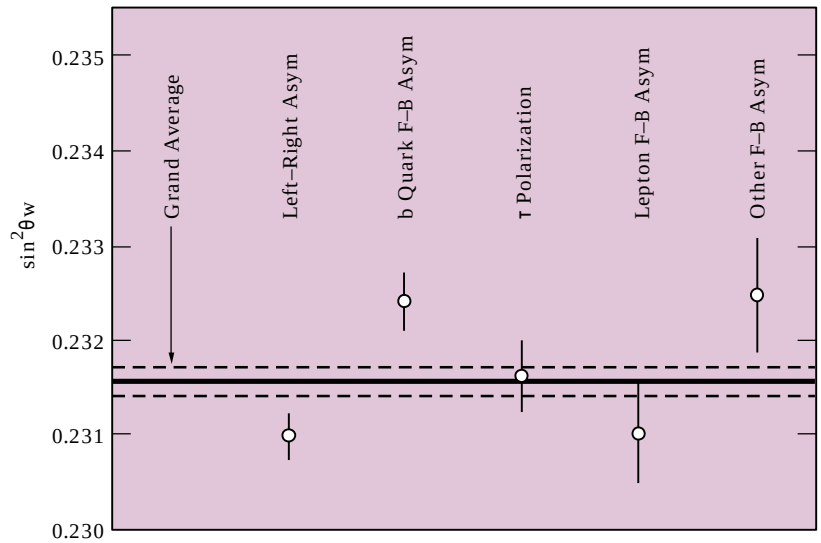

Compiled results of parity-violation based measurements of $\sin^2\theta_W$. The left-right asymmetry measurement was performed at SLAC while the remainder were done at CERN. Note the fineness of the vertical scale, reflecting the remarkable accuracy to which these measurements have been made.

In fact, when measurements of $\sin^2\theta_W$ were first becoming available from LEP in the early 1990s, one such particle the top quark had yet to be observed. Calculations revealed that the effect of the virtual pairs could bring the predictions of $\sin^2\theta_W$ in line with the measurements provided that the mass of the top quark lay within about 10 percent of 165 GeV/c^2. The subsequent discovery of the top quark at Fermilab in 1995, with a mass of 174±5 GeV/c^2, represented a striking triumph for the Standard Model.

Even so, one essential component of the Standard Model remains at large the Higgs boson. Like all other particles, the Higgs boson must be taken into account in the correction for the effect of the virtual pairs, although its contribution to this effect is small. With Fermilab's top quark mass included in the virtual pair correction, the Standard Model prediction for the parity violation measurements becomes $\sin^2\theta_W = 0.2322 \pm 0.0008$, with the small uncertainty on the prediction reflecting the fact that the mass of the Higgs can be anything at all, as long as it's greater than about 110 GeV/c^2 (otherwise it would already have been discovered).

Nevertheless, today's measured value of $\sin^2\theta_W$ is even more precise

On The Web

For related information on this topic refer to the following Internet addresses:

SLD
http://www-sldnt.slac.stanford.edu/alr

DELPHI
http://webnt.physics.ox.ac.uk/documents/particledemos/DelphiIntro/index.html

OPAL
http://opal.web.cern.ch/Opal

Ghostly Visits from the Higgs
http://www-sldnt.slac.stanford.edu/alr/interpretation.htm

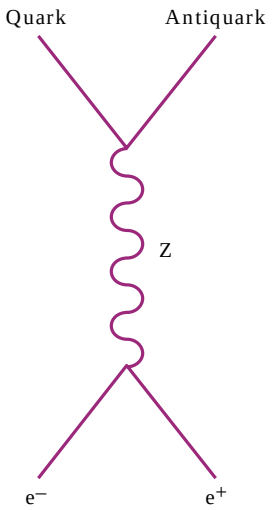

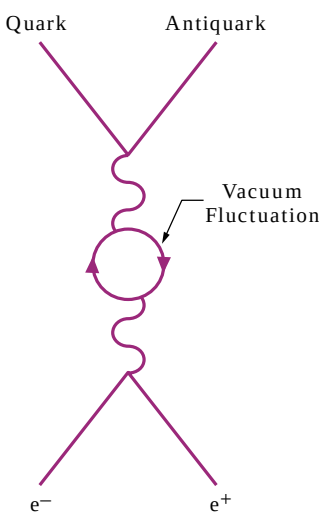

To derive the true theoretical prediction, the possibility that the Z boson temporarily fluctuated into a matter-antimatter pair (bottom) must be included in the calculation of the basic Z-boson exchange process (top).

than this refined theoretical prediction. We can thus turn the argument around and boldly predict that when the Higgs boson is discovered, its mass will be found to be somewhere between 110 and 225 GeV/c^2. In fact, if data from other observables that can constrain $\sin^2\theta_W$ are included—such as the mass of the *W* boson (measured at Fermilab and LEP)—the allowable range for the Higgs mass is reduced somewhat, to lie between 110 and 175 GeV/c^2.

BUT THE STORY hardly ends there, for late last year, running at an energy far above that necessary to produce the *Z* boson, the four LEP experiments reported several events with decay patterns consistent with those of a Higgs boson with a mass of 115 GeV/c^2—right in line with the expectations of the precision measurements. Not quite significant enough to merit claims of discovery, this intriguing hint awaits further substantiation.

There is thus a strong suggestion, due primarily to the decade-long program of precision measurements of *Z* boson properties, that particle physics is poised on the verge of one of the most profound of its many discoveries. Expectations are running high that the Higgs boson will be conclusively uncovered either in Run II of the Fermilab Tevatron (see "What's Next in the Search for the Higgs?" by John Womersley in the Winter 2001 issue of the *Beam Line*, Vol. 31, No. 1), or within the first year of running of CERN's Large Hadron Collider, now under construction.

In the larger view, though, the likely discovery of the Higgs boson in these proton colliders may in fact lead to an even greater set of unresolved questions, for the formalism used to introduce the Higgs field into the Standard Model involves a number of ad-hoc notions, suggesting that it may be more of a step on the path towards a deeper understanding of the workings of Nature than an end in itself.

Should this be the case, a careful dissection of its properties may well provide the clues needed to propel us forward to this next level of comprehension. And if the Higgs boson indeed lies in the mass range suggested by the precision measurements, there would be no better way to pin down its properties than in the controlled environment of electron-positron collisions. The machine needed to do this—a higher energy linear electron-positron collider—is currently in its design stages, with SLAC as one of its primary proponents. Such a machine, providing an almost certain promise of important experimental results, would begin collecting data early in the next decade.

Astrophysics Faces the Millennium V

New Technologies: Master or Servant?

by VIRGINIA TRIMBLE

"Both, please," (as Winnie-the-Pooh said to the choice between honey and condensed milk on his bread for tea) is the correct answer to many astronomical dichotomies. Are really bright, distant galaxies experiencing bursts of star formation or vigorous accretion onto central black holes? Are stellar coronae heated by acoustic or magneto-hydrodynamic waves? Is interstellar gas ionized by ultraviolet photons or by shocks? Inevitably "both" is also the answer if you ask whether major astronomical discoveries result because a new technology becomes available or, conversely, because people develop new technologies so as to be able to make specific observations or discoveries.

IT OCCURRED TO ME only as I started to write this (though it is surely known to many others) that there is usually a fairly sharp distinction, based on use, of astronomical devices past and present into: (1) research (Tycho's quadrant, the Keck 10-meter telescope, and Ray Davis's tank of perchlorethylene for instance); (2) applications of existing knowledge (a mariner's sextant, tables of the times of occultaion of the moons of Jupiter, to be used in finding longitude at sea, and the GPS); (3) information storage, calculation, and prediction (armillary spheres, volvelles, astrolabes, and N-body computer simulations, for instance); and (4) education (planetaria, orreries, globes, and college physics lab experiments). This time around, we'll look only at research devices, except for noting that they are not always actually bigger or more expensive than the others and that a few things do both. The classic astrolabes, for instance, had a set of metal arcs, ovals, and pointers on the front for calculating astronomical positions and on the back an alidade for measuring them.

Notice that, to separate research devices and to decide whether they were built to make specific

observations or primarily because they could be built (and the observations followed) you have to have some sense of the motivations of the builders. Thus I have nothing relevant to say about large, old sites that line up rather well with the cardinal directions or the rising, transiting, and setting of sun, moon, planets, or stars, like Stonehenge, Egyptian pyramids, and the Mayan pyramids of Chichen Itza (etc), and mention them only to provide an excuse for the illustration on the right.

Another territory that will go untrod here includes the observatories of Chinese, Hindu, and Islamic civilizations, some of which were earlier, larger, and more accurate than their European contemporaries before about 1600 and which were equally intended for making deliberate, accurate observations of planetary positions, eclipses, and the seasons, with a view to forecasting future events and their implications.

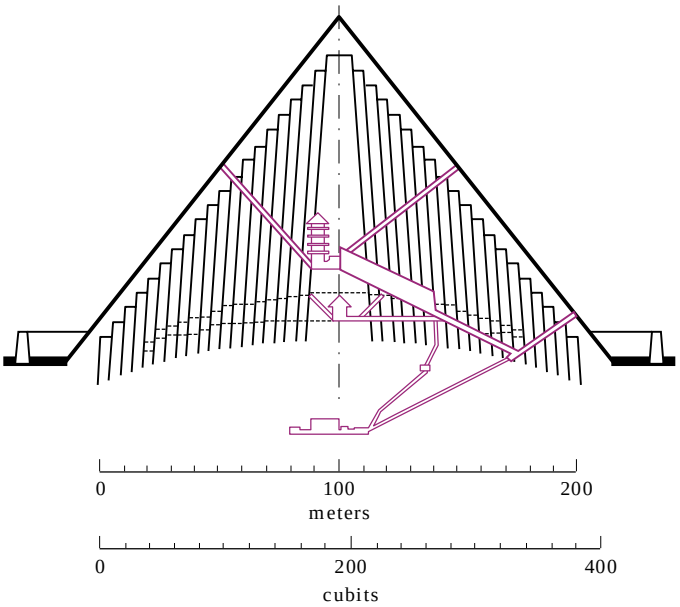

The Great Pyramid of Cheops or Khufu at Giza, which is accurately aligned to the cardinal directions, in N-S cross section. The two shafts extending from the upper (king's) chamber to the surface pointed, at the time of construction, to the upper culminations of Thuban (then a pole star) to the north and the middle star of Orion's belt to the south. The shorter shafts leading out of the lower (queen's) chamber are not parallel to the others, and the southern one is pointed in what was then the direction of the transit of Sirius, presumably by intent. Original figure drawn by the late Alexandre Mikhail Badawy to illustrate a 1964 paper by the present author. The lower length scale is in ancient Egyptian cubits.

THE BEGINNINGS

As the torch of astronomical knowledge passed from the Babylonians (lots of accurate eclipse records by about 900 BCE) to the Greeks (Eratosthenes who measured the size of the earth, Aristarchus who found the distance to the moon and had a go at the sun, Ptolemy and Hipparchus with their star catalogs) to the Islamic Arabs (who perfected the astrolabe) and back to medieval Europe, motivations included both the astrological (knowing positions in advance well enough to use them as omens and forecasts) and the ceremonial (celebrating seasonal festivals at the right time). Western measuring devices remained small and portable, and artistic merit appears to have ranked as high as accuracy in their construction. Thomas Aquinas (see the Winter 1999 issue of the *Beam Line*, Vol. 29, No. 3) was the theoretical starburst of the European recovery. During the hundred years following his synthesis of church doctrine and Aristotelian philosophy (1250 to 1350), Jacob ben Mahir (of Montpellier) invented a quadrant-astrolabe combination, and Levi ben Gerson (of Provence) invented the cross-staff. Things to note are that not all Jewish astronomers were theorists in those days, that the devices were heavy (because vertical was established by hanging them out in the open) but still small and portable, and that both were used for measuring the height of celestial objects above the horizon and angles between two objects. They are also arguably the last major instrumental advances of "business as usual" earth-centered astronomy. Then came Copernicus, whose *De Revolutionibus* appeared as he was dying in 1543 and laid out the details of a sun-centered cosmos, within which you ought to see parallax—small shifts in the apparent positions of stars,

planets, and whatever else you see that arise because the observer moves with the rotation and orbit of the earth.

FROM TYCHO TO BRADLEY

Up front, what these two had in common was the desire to discover (see for the first time) heliocentric parallax, in pursuit of which they had built observing equipment of new and better sorts. Both failed in their primary goal but found other entities of comparable importance. The only lesson I see here is that if you want to discovery America by setting out to sail to India, you had better have a state-of-the-art ship.

It would be nice if we could tell the story of Tycho Brahe (born three years after the publication of *De Revolutionibus*) by saying that he set out to find parallax, persuaded his sponsoring agent (Frederick II of Denmark) to make him P. I. of a major program (Uraniborg and Stjerneborg on the Island of Hven), and used the funded facility to establish that the nova (actually supernova) of 1572 and the comet of 1577 were more distant than the moon (whose parallax he could measure) and, therefore, that the heavens are not immutable.

Unfortunately, construction of the great mural quadrant at Uraniborg was not complete until after he had looked at the events of 1572 and 1577 with less innovative instrumentation. With the rigid mounting of his giant quadrant against a wall, he acquired stability (and so eventually positional accuracy) as good as the 0.5 arc minute resolution of human sight, as a compensation for being able to observe only transits across the northern meridian. Stjerneborg even had its major measuring devices underground, to avoid wind flexure. Working from latitude 55°N, Tycho had also the disadvantage of a relatively short baseline, but the advantage of some very long winter nights, over which both upper and lower culmination of circumpolar stars could be measured. The supernova happily flared up in November to make this work out.

And, of course, other astronomers with less precise instrumentation and perhaps less steady hands were not idle during these years. Thus Galileo, in his 1632 *Dialog*

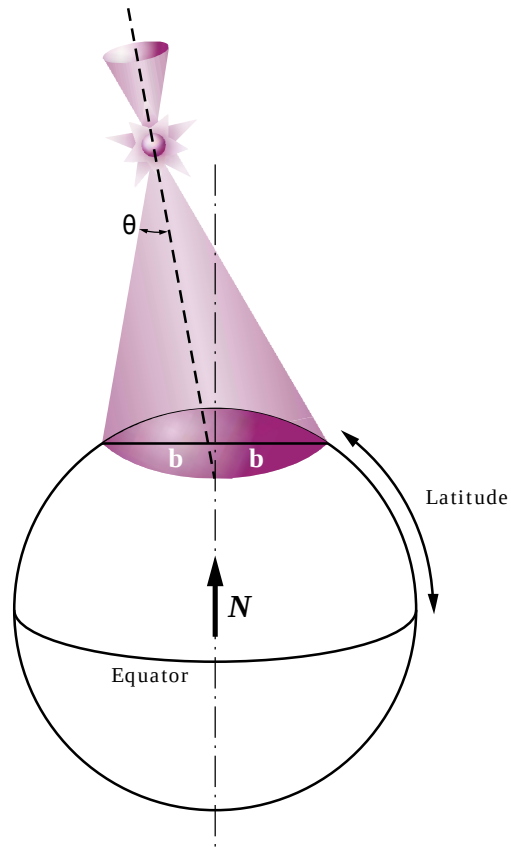

Earth-rotation (geocentric) parallax of a circumpolar object seen from high northern latitudes. Over a 24-hour period, the apparent position of the source traces out an ellipse relative to the direction of the Earth's rotation axis, N. For Tycho, at latitude 55 degrees north, the half-baseline b is only about 3658 km, and the angle, θ, for the moon 32.7 arcminutes. Since Tycho could measure this angle for the moon (the ellipse is skinnier because the moon is not far north in the sky, but its semi-major axis is the same), he knew that the nova of 1572 and the comet of 1577 must be further away, since he could not see any parallactic shift through the night.

(written to persuade his non-specialist but educated contemporaries of the truth of the Copernican picture) found it necessary to discuss at length which observations of the nova were most trustworthy and how one

might estimate the parallax, or a limit, by a suitable weighting of the best data. Not surprisingly, he voted with Tycho and against a bunch of people like Hainsel whom you are not expected to have heard of. This Galilean passage would probably also be the right place to begin a study of statistical astronomy. Do not worry, by the way, that the cost and effort to build Uraniborg were wasted. It was here, looking for the geocentric parallax of Mars, thinking it closer by a factor 16 than we now know, that Tycho collected the sequence of Martian data from which Kepler could work out his three laws of planetary motion.

Galileo seems to have approached science with a perspective very different from Tycho's. Hearing about the first, Dutch, telescope, he built an 8-power and used it to look at anything and everything. He continued omnivorous observation through several larger and more carefully shaped lens pairs, and became the first (or second or third) human being to see the moons of Jupiter, the resolution of the Milky Way into stars, the phases of Venus, mountains on the moon, and sunspots rotating across the solar surface.

We then enter some decades of confusion, in which "observers," using hand-held or casually mounted telescopes looked at surface features, while "measurers" with carefully machined quadrants and such determined positions of things with naked-eye sightings along their brass circles. Telescopes improved a good deal (technology-driven science), while positions (discovery-driven science) did not. Clearly what was needed was a marriage of the two attitudes. Achievement of this can perhaps be credited to Ole Roemer, who built the first precision-mounted telescope, a transit circle, at Copenhagen, after taking up the directorship there in 1681. He came with credentials of both sorts, having both (a) participated in Cassini's 1672 campaign to measure the geocentric parallax of Mars, clearly a "discovery motivated" project (which probably succeeded), and (b) shown that light is fast but not infinitely fast, from accurate timing of the occultations of the moons of Jupiter by their parent. The latter, while motivated by needs of navigation, was enabled by improvements in clock design.

Several museums in Italy house telescopes said to have been assembled, used, or blessed by Galileo (I have seen the one in Padua). Some were meant to be held up to the eye; some are on tripods; and this one appears to have an early alt-azimuth mounting.

Next up to bat were Samuel Molyneux (a London amateur with some money and a house big enough to build a telescope inside, looking straight up to the zenith), his assistant James Bradley (who understood what was needed), and George Graham (who knew how to build widgets and make them work). Together, they give birth to the zenith sector, mounted against the chimney, and set out to find the heliocentric parallax of Gamma Draconis, which transits very close to straight overhead for London observers.

They expected to find the star farthest north of its average position near the winter solstice and farthest south near the summer solstice. Instead, as December melted into March, they found the star moving south, hesitating, and moving back to its maximum northern extent in September. And the swing was a full 20 arcseconds either direction, definitely three months (90 degrees) out of phase with what they had expected. The collaborators thought at first that they had detected changes in the direction of the earth's axis of rotation, but a couple more annual cycles and data on a few more stars, along, it seems with Bradley's observations of weather vanes on boats as they changed direction on a windy day, led them to the correct explanation,

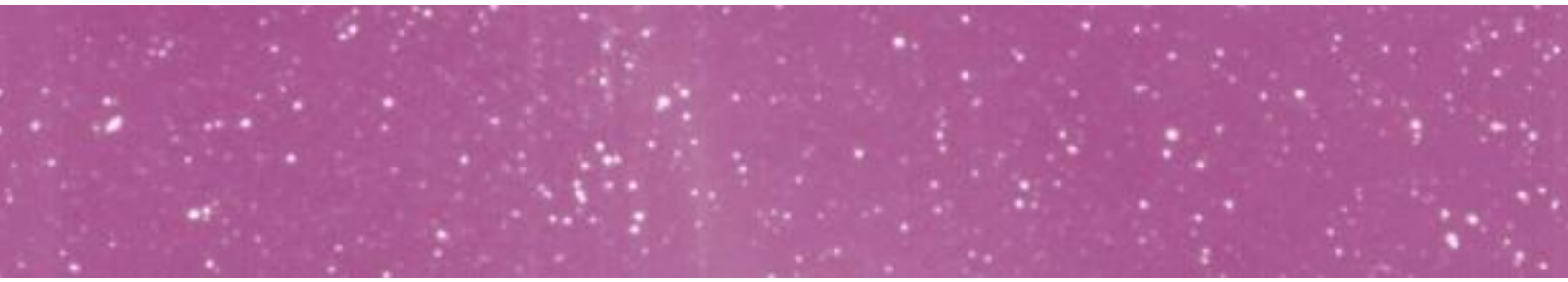

aberration of starlight. In one step, Bradley et al. had provided the first direct demonstration of the Copernican picture, pinned down the speed of light (quite close to Roemer's value), and shown that all previous star catalogues would have errors up to ±20 arcseconds in position, depending on the location of the stars and the time of year they had been observed. Incidentally, you can see bright stars in the day time with a telescope, though not from the bottom of a well without one.

PARALLAX, SPECTROSCOPY, AND IMPROVED PHOTON DETECTORS

William Herschel discovered Uranus because he had a very good telescope and lots of patience. But he went on to be the next major assailant on the parallax problem. Thinking that all stars were intrinsically the same brightness, he carefully recorded pairs that looked different, expecting them to be at very different distances and so ideal for parallax measurements. Twenty years of patient watching led to discovery of positional shifts all right, but the stars were going around each other, showing the universality of Newtonian gravitation on a grander scale than the mere solar system and giving birth to binary star astronomy.

The grail still glimmered ahead, and, once again, telescopes were designed and built with the discovery of heliocentric parallax as their main goal. Two of the three winners, Wilhelm Struve of Dorpat (Tartu, Estonia) and Friedrich Wilhelm Bessel of Konigsberg, Germany, had commissioned instruments from the same builder, Joseph Fraunhofer. The telescopes were not identical, but both were designed to make repeated and repeatable measurement of the angular separation between stars close together on the sky but at very different distances. Struve looked at Vega, Bessel at 61 Cygni (fainter appearing, but actually closer), and the third winner, Thomas Henderson of Cape of Good Hope, at Alpha Centauri, then as now the second closest star to us (the closest is the sun). He had a less finely tuned instrument, but had picked the optimal target. The reports were publish in 1837–1839.

Meanwhile, Fraunhofer had improved another technology to "see what he could see." Newton separated white light into colors and put them back together again (the hard part, Nature had been making rainbows at least since the time of Noah), but saw only a continuous spectrum, because his aperture was a round hole. In 1802, Wollaston (of the prism) tried a narrow slit and spotted seven dark lines crossing the rainbow, which he supposed were to divide the primary colors. Fraunhofer's 1817 inventory was 600, the most conspicuous of which he lettered A to K. He also recognized that his D was the same color (wavelength) as an emission feature seen in many flame spectra. This counts as the beginning of astronomical spectroscopy, though Fraunhofer, dying in 1826, saw neither the fruition nor the triumph of his instruments in recognizing parallax. Definitive identification of D with sodium and other solar features with other elements came from Bunsen and Kirchhoff in 1859, an example of technology improved for other purposes (both were laboratory scientists) yielding astronomical fruits quickly.

The history of astronomical photography, like that of telescopes, begins with a borrowed technique, and the first daguerreotype of the sun dates from 1845 (work of Foucault and Fizeau, known mostly for laboratory physics). The Harvard College Observatory archives include an 1857 (probably collodion) plate of the Pleiades. It shows three stars. Dry plates from the 1870s onward made it possible to record at the telescope images and spectra you could then measure at leisure back home, including the flash spectrum of the solar chromosphere during an eclipse, moving asteroids and comets, and the variable brightnesses of pulsating stars (though

recognition of the 30 Hz Crab Nebula pulsar required another generation of detector electrification).

As early as 1912, however, C. E. Kenneth Mees, the first research director at Eastman Kodak, initiated work leading to special series of spectroscopic plates to meet astronomical needs. The sensitizing dyes and emulsion-making techniques that resulted from this led to Tri-X and other fast films, Technical Pan with its wide wavelength response and fine grain, and red and infra-red sensitive emulsions later used to penetrate camouflage, spy at night, and detect subtle changes in vegetation color that signal disease and other stresses.

THE TWENTIETH CENTURY

In the 1890s, astronomers interested in variable stars were still arguing about whether you learned more from photographic images or from careful visual comparisons, through suitable telescopes, of course, of the target star with constant neighbors. Much of the problem was that the emulsions of the day recorded mostly blue light, while the eye is at its best in the yellow-green, so that how much the brightness of a star changed really did depend on observing method. Amateur astronomers today (who monitor most of the variables that get monitored at all) still use visual telescopic methods, but also modern electronic detectors and, occasionally, film.

The photographers, with a range of filters and Mees's red and panchromatic emulsions, of course won over the visual observers on the professional side. But they did not have the only permanent floating crap game for long. The photoelectric effect must have been discovered in time for Einstein to explain it in 1905–1906, but it was not part of many applications yet in 1915, when Joel Stebbins followed an eclipse of the binary star Delta Orionis with a selenium photometer.* Delta Ori thereby became the first spectroscopic, eclipsing binary to have its orbit determined by both techniques, and Stebbins was one of the first two astronomical photometrists.

To bring optical and near infrared detectors down to the present, we can recall that CCDs arose in industry but have been improved (especially, thinned to broaden their wavelength coverage) specifically for astronomy. Frank Low developed his infrared bolometer to look at the skies (with great success, and a remote descendent is being adapted for non-destructive testing). More recent entries in the still-difficult IR regime are InSb (pronounced inz-bee) and HgCdTe (MerCadTell) arrays, which arose in the military-industrial complex. They are being incorporated into astronomical cameras and spectrographs as fast as industry can produce them, indeed somewhat faster. We currently have a bottle neck in arrays, and being sure you are going to get "a good chip" is a big step en route to astronomical progress today. Here the available technology is clearly driving what astronomy can do.

The first two radio telescopes were built by people who wanted to discover something—the source of noise in trans-Atlantic radio telephony in the case of Karl Jansky in 1932 and "more about what Jansky had seen" in the case of Grote Reber, who, a couple of years later, built the second radio telescope on his own time, in his own back yard.

Then there was a war, whose remains included a large number of radar dishes, S, X, and other band receivers, and people who had learned how to use them. A small subset, in England and Australia, turned the dishes up at the sky (the horizon no longer being interesting, and the ground even less so). What they saw was so spectacularly unexpected that improvements in sensitivity and angular resolution became drivers for rapid technological development. In particular, multi-baseline interferometry and aperture synthesis were first reduced to practice to sharpen radio images. Much of the mathematics, while obviously inherent in laboratory experiments with visible light dating from the nineteenth and early twentieth centuries, was first reduced to practice

Selenium is actually a photoconductor, that is, a metal in which absorption of a photon puts an electron into the conduction band, decreasing resistence. Stebbins'device was, therefore, the remote ancestor of the CCD, or charge coupled device (detector of choice in most of optical astronomy today). In between both photoelectric and photoconducting detectors have been in use.

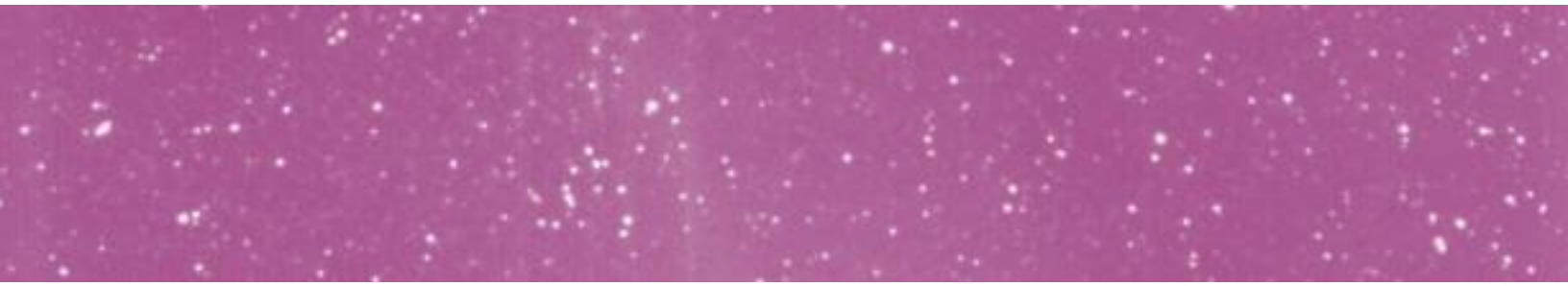

to sharpen radio images. Much of the mathematics of reconstructing an image from portions of its Fourier transform (that is what an interferometer gives you) was also worked out in the first instance by radio astronomers.

Optical interferometry, tried by Albert Michelson at Mt. Wilson in the 1920s, again without phase preservation by Hanbury-Brown and Twiss in Australia in the late 1950s, and now bordering on the routine, at least for small, closely-spaced mirrors, has a mostly-astronomical history. Significantly, Hanbury-Brown was (and is) a radio astronomer most of his life. In contrast, adaptive optics (where you wiggle a mirror—generally not the giant primary of your telescope—to undo the wiggles introduced by air), though first proposed by an astronomer (Horace Babcock, in the 1950s) was developed under Air Force classification to a much higher standard than astronomers had been able to achieve. Declassification had led to AO programs at nearly all large telescopes. Because not all interesting patches of sky include a star bright enough to be the reference source for adaptive optics, laser guide stars (reflected patches from the sodium ion layer high in the atmosphere) are being used or considered many places. The laser is another "we thought of it, but you did it" technology. Back in the 1930s, Donal H. Menzel, calculating the absorption of radiation by diffuse gas remarked that you might, if enough atoms were in an excited level, actually get amplification rather than absorption. He was right. Indeed there are natural, interstellar masers (and possibly lasers) as well as laboratory ones.

The beginnings of X-ray and gamma-ray astronomy present an interesting contrast, although both require getting above most of the earth's atmosphere and so now rely on rocket launches, remotely descended from the German V-2 (another of the spoils of war). But apart from the rocket flights that looked at the sun in the 1940s, the first X-ray astronomy was done by people who know how to build X-ray detectors, and simply wanted to look at the skies to see what might be there. Much of the credit rightly goes to Riccardo Giacconi, who persuaded the sponsors that X-ray flourescence of sunlight from the lunar surface would be detectable, thus providing a motivation for a 1962 rocket flight. The fluorescence was eventually seen more than 25 years later, but, meanwhile the rocket-borne detector saw a really bright source, Scorpius X-1, that happened to be close in the sky to the moon that day. The first gamma-ray telescope, on the other hand, was sent aloft (on a balloon) specifically to look in the direction of Cygnus A, a radio source in a distant galaxy that, it was then supposed, might actually be a galaxy-anti-galaxy pair in collision. If so, then the flux of annihilation gammas would have been truly enormous. It wasn't, and several more generations of detectors flew on balloons and rockets before the first astronomical source registered (it was the Crab Nebula, also the first identified X-ray source and radio source outside the solar system).

The beginnings of neutrino astronomy and gravitational radiation astronomy are also, at least approximately, one of each. A later issue of the *Beam Line* will remind you of how Raymond Davis, Jr., then of Brookhaven National Laboratory, set out with the specific goal of seeing neutrinos from the nuclear reactions inside the sun. It took about a decade, but he succeeded, in the process figuring out chemical methods (like rescuing 25 argon atoms from 100,000 gallons of cleaning fluid) that had never been needed before.

At about the same time, Joe Weber set out, using techniques he had learned as a radio engineer, to build and operate the best detector for gravitational radiation he could think of simply to see what there was to see.

Before going on to look ahead a few years, two general points are worth noting. The first is that new ways of doing something are, very often, at the beginning enormously inferior to what has been around for a good long while. Stebbins's early photometer could not record even the fainter naked-eye stars. And the first CCD images looked like a bad case of acne overlain by dandruff. Indeed a good deal of tidying up of "bad pixels" is still needed to produce the glorious Hubble Space Telescope pictures you see at every turn.

Second, just what James Bradley's family thought of his observing the same star over and over again (up to

Somewhere on the campus of the University of Maryland in 1969, Joe Weber speaks at a press conference, organized by the university, upon instructions from the Chairman of the Physics Department, Howard Laster (with plain black tie), and with the support of the Director of the Astronomy Program, Gart Westerhoud (with bow tie). On the demonstration table is a scale model of the original, 26-in. diameter bar detector (the acoustic isolation of the model is poor). On the board is a cross section of the bar, acting as a halo for Weber. The announcement was picked up by a number of newspapers, and Weber used to describe the coverage as "having appeared on the obituary page of the New York Times*," where they often tucked science items in those days. Weber still had and occasionally wore the striped silk tie at the time of his death.*

16 times a night), night after night, year after year, is known only to the ghosts that flit around their graves. But no important new technology has been developed in modern times (and the same is probably true of major theoretical advances) except by someone who took the project more seriously and worked on it more intensively than his friends and relations thought entirely reasonable.

TECHNOLGIES WAITING TO HAPPEN

The Compleat Astronomer would like to know the direction of arrival, the time of arrival, and the precise energy (wavelength) of every photon that ever hits the earth's atmosphere. Increasingly, this has meant enormous, and enormously expensive facilities, like the Next Generation Space Telescope (2007 or thereabouts), ALMA (the Atacama Large Millimeter Array), and LIGO (the Laser Interferometric Gravitywave Observatory), also multi-year to decade projects. For these and others like them, the wishes and widgets continuously reshape each other. NASA has invented the word "rescope" to describe this. Building consensus for such things requires meetings convened over may years, whose proceedings you can read, so I mention here a handful of smaller gems.

The award for widget of the year in 1999 went to two solid state devices that are a first step toward recording direction, arrival time, and energy simultaneously (prevented by the two-dimensional nature of most detectors). These were a superconducting tunnel junction (STJ) and a cryogenic-transition edge senser spectrophotometer (TES). Both initially looked to see whether the color of the optical emission from the pulsar in the Crab Nebula changes through its period (not much). Matching a spectrograph to the image size from a very large, but short focal-ratio telescope might seem to require microminiaturization. Immersing the grating in some substance, like glycerol, whose index of refraction is very close to that of glass also works.

X- and gamma-ray astronomy have always suffered from the difficulty in forming images. If you measure

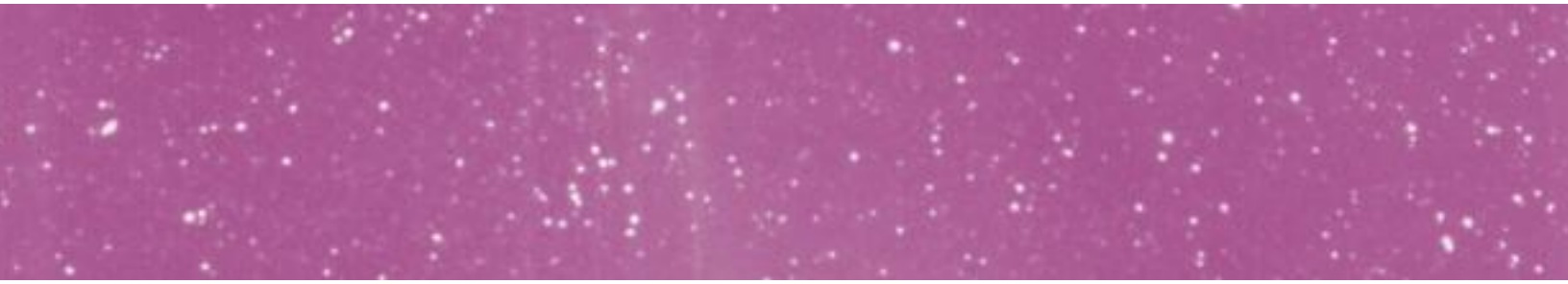

direction of arrival with some sort of collimator, then you buy angular precision at the expense of a decent size field of view. The more recent X-ray satellites (Chandra and XMMNewton) form real images with grazing-incidence optics (sometimes gold plated). A giant step beyond is grazing-incidence interferometry for X-rays. This could, someday, yield micro-arcsecond resolution to image the horizon of galactic and extragalactic black holes. Meanwhile, the grating that is the surface of an old LP record can be used to focus keV X-rays by placing two of them only a few microns apart. The collecting area is therefore rather small per record pair, but there must be an awful lot of surplus LPs these days.

MACHO, the most extensive of the surveys for gravitational lensing by compact objects in the halo and disk of the Milky Way, closed its dome essentially on schedule in January 2000, but successor programs are starting up. AGAPEROS is the seductively named succesor to EROS, a contemporary of the MACHO project, and there are several others.

The experience of processing the billions of star brightness measurements that were the raw data of MACHO (etc) has expanded estimates of what can be done in this direction, from space as well as from the ground. For instance, two mission proposals (in the medium cost, 1/3 billion dollar range) aim to locate from space and follow large numbers of fairly distant supernovae and use them to measure the cosmological parameters (this is SNAP) and to catch transits by earth-sized planets orbiting stars in our part of the galaxy. Even if such planets should prove to be fairly common, you have to watch a great many stars to catch a few transits, because most orbits will not be seen exactly edge-on. And, of course, the star will be dimmed to about 0.99999999 of its normal brightness, requiring some fairly stable calibrations (this is Kepler). Think of it as having $1,000,000 in pennies, and somebody takes one away.

Perhaps the largest barrier to improvements in astronomical technology is that the community does not reward sufficiently the people who contribute. They are hardly ever first authors on the papers reporting major discoveries from the devices to which they gave birth, they win few major prizes, and sometimes even face difficulties in acquiring degrees and tenure. Thus we increasingly buy the skills we need from industry. This tends to drive cost up and involvement down and other branches of science have a better record in rewarding and valuing their living instrument builders, which astronomy might do well to learn from.

MEHR LIGHT

MY SECRET HISTORICAL WEAPON in the past year has been a Russian-language biographical dictionary, with about 1000 entries, from the Greeks well into the twentieth century. Compiled by Igor G. Kolshinskij, Alla Korsum, and M. G. Rodriguez, it was published in Kiev in 1986 and originally cost 2 rubles, 20 kopeks.

A valuable source on photometers, CCDs, and all is G. H. Rieke, **Detection of Light** (Cambridge University Press, 1994).

Technology transfer from astronomy to other sciences and industry was discussed in the last two of the "Decade Reports," on astronomy and astrophysics commissioned by the National Research Council. The 1991 version was called **The Decade of Discovery** and chaired by John Bahcall. The 2001 version was coordinated by J. H. Taylor and C. F. McKee and has just about been released under the title **Astronomy and Astrophysics in the New Millennium**. The relevant chapter in 1991 was written by yours truly, the 2001 version probably by Stephen Strom and David Hollenbach.

Karl Hufbauer's **Exploring the Sun: Solar Science Since Galileo** (1991, Johns Hopkins University Press) is complementary to Michael Hoskin's **The Cambridge Concise History of Astronomy** (1999, Cambridge University Press). And someday (perhaps about 2003) there will be a two-volume biographical encyclopedia of the history of astronomy edited by Thomas Hockey (Springer).

FROM THE EDITORS'DESK

Alan Cousins

Edward Hartouni

Abraham Seiden

THE COVER of our Spring 1998 issue, Vol. 28, No. 1 featured South African astronomer, Alan Cousins (top photograph), a remarkable individual, whose career was called to our attention by our regular contributor, Virginia Trimble. Dr. Cousins' first contribution to the astronomical literature was published in the *Monthly Notices of the Royal Astronomical Society* in 1924. On May 11, 2001, the date of his death, his last paper was published in the same journal, concluding 77 years of publications. Most of his career was dedicated to accurate measures of standard stars in the southen sky. A press release in his memory is at http://www.saao.ac.za/news/awjc.html.

The *Beam Line* is a collaboration between many different individuals, and our Editorial Advisory Board plays a major role in suggesting articles, authors, and topics for special issues. Without their guidance, our task as editors would be more difficult. With this issue we bring on two new members and say thank you and farewell to two others. Our new Board members are Edward Hartouni (center photograph), Lawrence Livermore National Laboratory, and Abraham Seiden (bottom photograph), University of California, Santa Cruz. Our departing Board members are George Trilling, Lawrence Berkeley National Laboratory, and Karl Van Bibber, Lawrence Livermore National Laboratory.

If you~~our~~ readers~~ha~~ve suggestions for topics you would like to see covered in the *Beam Line*, please suggest them to one of us or to any of our Board members. We will do our best to make your request happen. Our next issue, guest edited by contributing editor, Michael Riordan, is a special issue on neutrinos. Watch for it in the fall.

Rene Donaldson

Bill Kirk

CONTRIBUTORS

Graham Ramsay

FRANK WOLFS is a Professor of Physics at the University of Rochester. He was educated at the University of Groningen (The Netherlands) where he received his BS and MS degrees. In 1987 he obtained his PhD in Experimental Nuclear Physics from the University of Chicago for his work in low-energy nuclear physics at Argonne National Laboratory (ANL). He was the recipient of the first Enrico Fermi Fellowship at ANL, where he continued to work after receiving his PhD until joining the University of Rochester in 1990. He currently is a member of the PHOBOS Collaboration and conducts his research at the Relativistic Heavy-Ion Collider at Brookhaven National Laboratory.

KRISHNA RAJAGOPAL is an assistant professor in the Center for Theoretical Physics at the Massachusetts Institute of Technology. He enjoys thinking about QCD in extreme conditions, because it requires linking usually disparate strands of theoretical physics, including particle and nuclear physics, cosmology, astrophysics, and condensed matter physics.

His recent research includes the physics of the critical point in the QCD phase diagram, described in his article, and the properties of the cold, dense quark matter that may lie at the centers of neutron stars, where the densities are so high that the neutrons are crushed one upon another. His work shows that a lump of cold quark matter behaves like a transparent insulator, and not like an electric conductor as previously assumed.

BRUCE SCHUMM received his PhD in 1988 from the University of Chicago, where he worked as a member of a neutrino-scattering collaboration at Fermilab. He then migrated to California, taking a job as a research associate at the Lawrence Berkeley National Laboratory. There he worked with the MARK-II and SLD experiments, until leaving in 1995 for a position at the University of California, Santa Cruz, where he is currently an Associate Professor of Physics.

In addition to putting the finishing touches on the SLD precision measurement work discussed in this issue, he is the Principal Investigator of the UCSC BaBar group.

He is a firm supporter of efforts to present particle physics research to the general public and is writing a popular book on the conceptual basis of particle physics.

Virginia Trimble and Joseph Weber at the 1994 Christmas dinner-dance reunion of the US Naval Academy class of 1940.

VIRGINIA TRIMBLE is not the most experimentally inept physicist/astronomer in the history of the field, in the sense that apparatus does not necessarily break down just because she passes through town. She does, however, have a healthy respect for people who can build things and make them work. Such people have included her father, Lyne Starling Trimble (who was a UCLA undergraduate contemporary with Glenn T. Seaborg), an industrial chemist who held patents on color processing systems for motion pictures, etched tips for ball point pens, magnetostrictive systems, and even less likely stuff, and her husband, Joseph Weber (who was a member of the University of Maryland and University of California Irvine faculties for many years before his death), holder of patents for detectors for gravitational radiation and coherent scattering of low-energy photons and neutrinos. But this year, she assembled a set of sorting shelves to sit at the back of her desk (replacing the old steel, multi-shelved cabinets that were made for computer output), and it is holding up well under the weight of 11 turtles, 1 dragon, 1 pleisiosaurus-head lamp, 7 perfume bottles, a "don't drink and derive APS" coffee mug, a McGraw-Hill slinky, pictures of Joseph Weber and J. Robert Oppenheimer, and the paperwork for the 24 carefully sorted projects, on all of which she is behind.

DATES TO REMEMBER

August 7–15	27th International Cosmic Ray Conferences (ICRC 2001), Hamburg, Germany (cop@copernicus.org or http://www.copernicus.org/icrc/)
August 13–24	29th SLAC Summer Institute on Particle Physics: Exploring Electroweak Symmetry Breaking (SSI 2001), Menlo Park, California (ssi@slac.stanford.edu; http://www-project.slac.stanford.edu/ssi/2001/)
August 19–Sep 9	Aspen Summer Workshop on Flavor Physics: Standard Model and Beyond, Aspen, Colorado (ghiller@slac.stanford.edu or ligeti@fnal.gov or http://andy.bu.edu/aspen/aspen.html#workshops)
August 22–23	Feynman Festival, College Park, Maryland (yskim@physics.umd.edu or http://www.physics.umd.edu/robot/feynman.html)
Aug 26–Sep 8	European School of High-Energy Physics, Beatenberg, Switzerland (Claire Earnshaw, School of Physics, CERN/DSU, 1211 Geneva 23, Switzerland; Claire.Earnshaw@cern.ch or http://www.cern.ch/PhysicSchool/)
Aug 30–Sep 4	International Workshop on Particle Physics and the Early Universe (COSMO-01), Rovaniemi, Finland (Matts Roos, SEFO, Box 9, Helsinki, FIN-00014, Finland or cosmo_01@helsinki.fi)
Sep 10–13	9th International Symposium on Heavy Flavor Physics, Pasadena, California (Heavy Flavors 9: High Energy Physics, 356-48: Caltech, Pasadena, CA 91125-4800; HF9@hep.caltech.edu or http://3w.hep.caltech.edu/HF9/)
Sep 10–28	School on String Theory, Istanbul, Turkey (strschool@gursey.gov.tr or http://fge1.gursey.gov.tr/strschool/)
Sep 16–29	CERN School of Computing, Santander, Spain (computing.school@cern.ch or http://csc2001.web.cern.ch/csc2001/)
Sep 25–27	14th International Symposium on Superconductivity (ISS 2001), Kobe, Japan (http://www.istec.or.jp/ISS/ISS.html)
Sep 29–Oct 4	Frontiers in Particle Astrophysics and Cosmology: EuroConference on Neutrinos in the Universe, Lenggries, Germany (rheywood@esf.org or http://www.esf.org/euresco/01/pc01142a.htm)
Oct 9–12	DESY Theory Workshop on Gravity and Particle Physics, Hamburg, Germany (Mrs. S. Gunther, DESY-Theory, D-22603, Hamburg, Germany; theosec@mail.desy.de or http://www.desy.de/desy-th/workshop.01/index.html)

Oct 15–19	7th International Conference on Advanced Technology and Particle Physics, Villa Olmo, Como, Italy (congress@icil64.cilea.it or http://hpl302.mib.infn.it/Conference2001.html)
Oct 15–26	CERN Accelerator School: Course on Accelerator Physics, Seville, Spain (CERN Accelerator School, AC Division, 1211 Geneva 23, Switzerland; suzanne.von.wartburg@cern.ch or http://schools.web.cern.ch/Schools/CAS/)
Oct 17–20	APS Division of Nuclear Physics 2001 Fall Meeting and 1st Joint Meeting of the Nuclear Physicists of the American and Japanese Physical Societies, Maui, Hawaii (Carol Kuc, CMP, President, Complete Conference Coordinators, Inc., 1280 Iroquois Avenue, Suite 408, Naperville, IL 60532; ckuc@cccmeetings.com or http://www.cccmeetings.com/)
Oct 18–29	28th Annual SSRL Users Meeting, Menlo Park, CA (knotts@slac.stanford.edu)
Oct 21–23	Heavy Quark Physics at the Upgraded HERA Collider, Rehovot, Israel (Ana.Weksler@weizmann.ac.il or http://www.weizmann.ac.il/conference/hera)
Oct 21–27	9th International Conference on the Structure of Baryons (Baryons 2001), Newport News, Virginia (Susan Ewing, Jefferson Lab, 12000 Jefferson Ave., MS 12h2, Newport News, VA 23606; ewing@jlab.org or http://www.jlab.org/intralab/calendar/archive00/baryons.html)
Nov 4–10	2001 IEEE Nuclear Science Symposium (NSS) and Medical Imaging Conference (MIC), San Diego, California (nss2001@bnl.gov or http://www.nss-mic.org/NSS.htm)
Nov 8–11	Workshop on Future Opportunities for Neutrino Physics, Vancouver Island, British Columbia, Canada (neutrino@phys.ualberta.ca or http://csr.phys.ualberta.ca/~neutrino/)
Dec 10–14	3rd Latin American School on Strings and Fundamentals, Caracas, Venezuela (parias@fisica.ciens.ucv.ve)