SLAC-R-1077

Load Composition Model Workflow
BPA TIP 371 – Deliverable 1A (11 July 2017)

David P. Chassin
Gustavo V. Cezar

SLAC National Accelerator Laboratory
Menlo Park, CA 94025 (USA)

July 11, 2017

This material is based upon work supported by the U.S. Department of Energy, Office of Science, under Contract No. DE-AC02-76SF00515.

This report is an interim deliverable produced as an account of work performed by SLAC National Accelerator Laboratory for Bonneville Power Adminstration under Intergovernmental Contract No. 74896, entitled "TIP 371: Advancing the Load Composition Model".

A copy of this report has been delivered to OSTI for the record as report no. SLAC-R-1077.

SLAC National Accelerator Laboratory is operated by Stanford University for the US Department of Energy under Contract DE-AC02-76-SF00515.

Abstract

This project is funded under Bonneville Power Administration (BPA) Strategic Partnership Project (SPP) 17-005 between BPA and SLAC National Accelerator Laboratory. The project in a BPA Technology Improvement Project (TIP) that builds on and validates the Composite Load Model developed by the Western Electric Coordinating Council's (WECC) Load Modeling Task Force (LMTF). The composite load model is used by the WECC Modeling and Validation Work Group to study the stability and security of the western electricity interconnection. The work includes development of load composition data sets, collection of load disturbance data, and model development and validation. This work supports reliable and economic operation of the power system.

This report was produced for Deliverable 1A of the BPA TIP-371 Project entitled "TIP 371: Advancing the Load Composition Model". The deliverable documents the proposed workflow for the Composite Load Model, which provides the basis for the instrumentation, data acquisition, analysis and data dissemination activities addressed by later phases of the project.

Contents

Chapter 1

Introduction

The Western Interconnection has made significant progress in dynamic load modeling over the past 10 years [1]. A composite load model (see Figure 1.1) was developed, tested and implemented in all major production-level grid simulators used in WECC, including General Electric PSLF, PowerWorld Simulator, and Siemens PTI PSS/E. Load composition data sets are available for 24 hours, four seasons, and various types of substations (residential, commercial, mixed and rural) in 12 climate zones across the West, as well as for several types of industrial loads. Tools for load model data management have been developed, and processes for creating load model records are established. WECC planning base cases now have climate zone and feeder/substation identifiers populated. Load models are a fundamental part of power system planning and operating studies. WECC approved the Phase 1 composite load model for planning studies starting with the 2014 study program. Bonneville Power Administration and Southern California Edison played a leading role in the model development, testing, validation and deployment.

WECC adopted a phased implementation of the composite load model. Stalling phenomenon

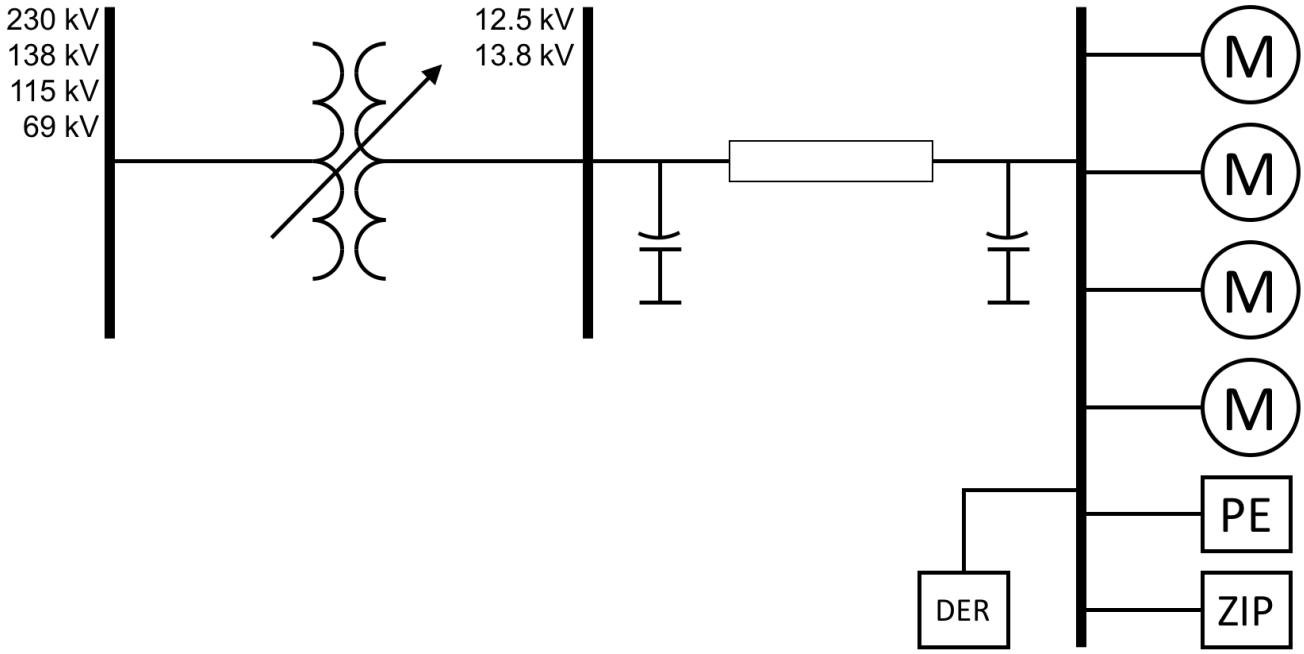

Figure 1.1: WECC Composite Load Model

of single-phase compressor motors needs further research and validation against event recordings and tests. System performance criteria used to plan and operate the power system also need to be updated to recognize the phenomenon of Fault Induced Delayed Voltage Recovery (FIDVR). Therefore for Phase 1, the air-conditioner stalling feature was disabled in the model while efforts are undertaken to validate the model and obtain data sets needed to successfully deploy the model more broadly in WECC planning studies.

The Phase 2 composite load model requires additional research and development, which will be addressed by the proposed research project:

1. Develop load composition data sets for a wide variety of commercial buildings, including rules of associations that map electrical end-uses on load model components
2. Advance modeling of protection, controls, and energy management systems used in variety of end-use applications and buildings
3. Deploy disturbance data collection systems in distribution systems for dynamic model validation

This project builds upon the successful deployment of the Phase 1 result of the WECC composite load.

1.1 Objectives

The objectives of the Load Composition Workflow are as follows:

1. Develop simple models that can generate typical load shapes and end-use load composition for various types of most common commercial and residential buildings (large office, retail, grocery story, house, etc.);
2. Provide sets of model parameters that represent the most common commercial and residential buildings;
3. Acquire samples of building load shapes and end-use load composition;
4. Verify building model data using actual building metering data;
5. Understand differences between various buildings of same type;
6. Understand the factors that affect load shapes and end-use composition and
7. Recommend a set of model parameters that represent a typical building for each type (i.e. typical large office, typical grocery, etc).

1.2 Methodology

This research recognizes that there is a distinction between the types of building models available and their uses.

Detailed building models allow in-depth analysis of power consumption and energy demand given specifics of the building design and operations, and

System-level models provide reasonable estimates of building load shapes and end-use composition for system-wide analysis. Since our ultimate objective is to estimate feeder-level load shapes and load composition, we focus on the latter in this project.

Available sources of building load shape and end-use composition information include:

1. NEAA conducted Commercial Building Stock Assessment (CBSA)
2. NEAA conducted Residential Building Stock Assessment (RBSA)
3. California Commercial End-Use Survey (CEUS)
4. Simulations done using eQuest building models for a variety of building in various climate zones in WECC.
5. A few samples of monitored data from BPA
6. Load research information from large IOUs in Pacific Northwest, including Portland General Electric, Puget Sound Energy, and Avista, as well as public power in the region.

We intend to acquire sets of building load shapes and end-use load composition.

The purpose of the load model data is to support a software model which is a hybrid between the full scale Load Composition Model developed by PNNL between 2007 and 2010 and WECC's light model developed from the full-scale model by BPA between 2010 and 2012.

We intend to use these complex models and available data to better understand the design and operational factors that affect building load shapes and load composition. Once such understanding is gained, we will develop simple models that capture the fundamental relationship between the ambient conditions and the building load shapes and end-use composition given appropriate building design and operational factors.

Figure 1.2 illustrates the building simulation methodology. The model inputs are temperature and humidity, time of day and day of week. The models tunable parameters are design assumptions – building vintage, installed end-use equipment, etc – and operating assumptions – assumptions on end-use utilization, e.g. light schedules, HVAC temperature schedules, computer turn-off policies, etc. The model output is building load shape and end-use load composition.

We expect the research to answer the following questions:

1. Commercial buildings:
   (a) Recommend a list of commercial end-uses that is sufficiently expansive to capture the diversity of end-use dynamic characteristics, yet can be reasonably estimated/verified from available building simulations and monitoring data.
   (b) What is the appropriate list of building types for the system-level modeling? Does the list sufficiently capture diversity in load shapes and end-use composition among various commercial buildings?
   (c) How large are the variations in load shapes and end-use composition among buildings of the same building type in same climate region? What design and operational factors drive such variations?

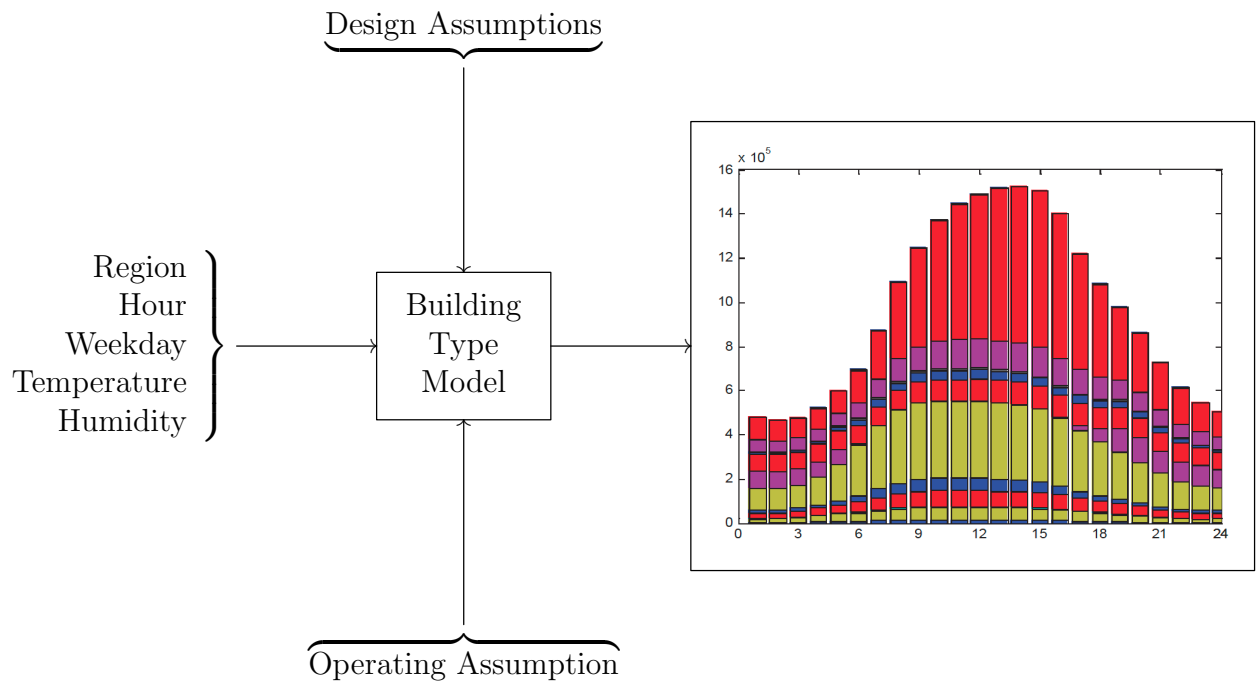

Figure 1.2: Building load shapes and end-use composition

(d) How large are the variations in load shapes and end-use composition among identical buildings located in different climate zones. What design and operational factors drive such variations?

(e) Is it possible to aggregate (group) various building types? (CEUS, DOE2, utility rate schedules) and the one proposed. What aggregation methods can be used?

2. Residential buildings:

   (a) How large are the variations in load profile and end-use composition among residential buildings? What factors drive such variations?

3. Building Models:

   (a) Develop simple (polynomial, ARMA, etc.) models predicting load shapes and end-use composition for classes of commercial and residential buildings given a set of inputs (time of day, day of week, ambient conditions, etc.) and design and operational factors. Make sure that the model is scalable and that the design and operational factors are resizable.

1.3 Overview

The overall workflow process is illustrated in Figure 1.3. The data sources identified are the following.

EULS: End-use Loadshapes provide data on the load shapes of residential and commercial end-uses.

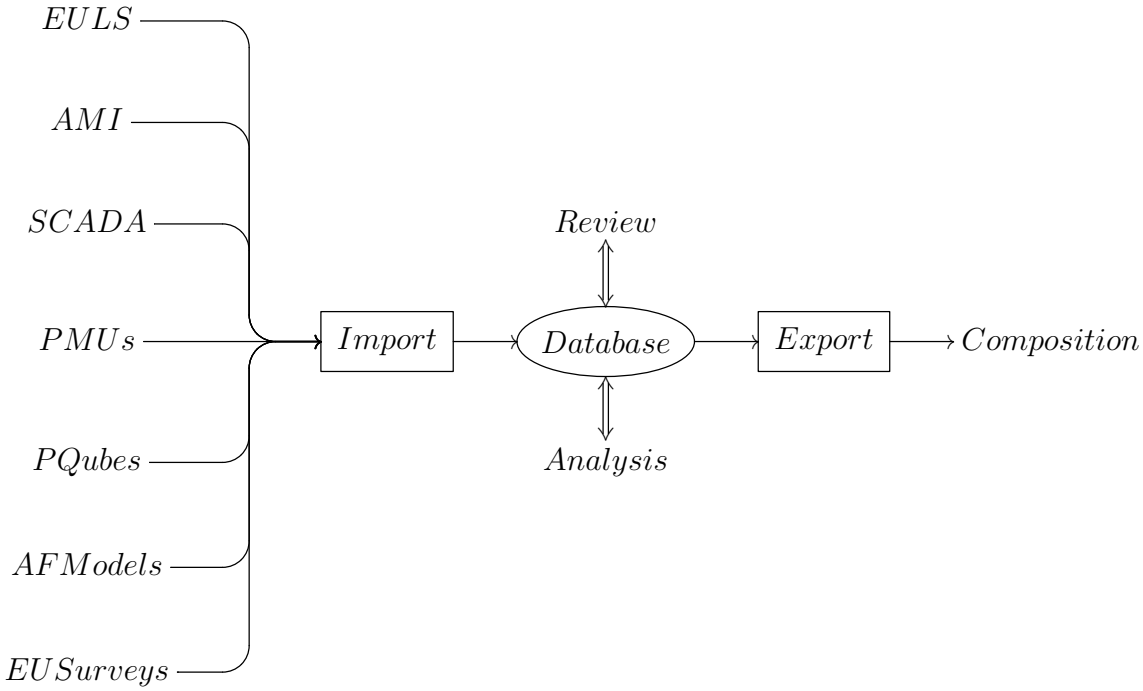

Figure 1.3: Load Composition Data Workflow

AMI: Automated Metering Infrastructure provide subhourly customer-level demand data.

SCADA: Supervisor Control and Data Acquisition provide event data and feeder configuration status data needed to validate the aggregate load compositions.

PMU: Phasor Measurement Units provide event data used to validate the aggregate load compositions.

PQubes: PQube units provide event data and are used to support localization of motor state statistics.

AF Models: Arc-fault models support rules of association used to determine the electrical characteristics of end-use loads.

EU Surveys: End-use surveys provide data supporting rules of association that are required to transform end-use load shapes to load compositions.

1.3.1 Data Import

The data import processes restructure the incoming data into a database structure that facilitates analysis. The exact structure of this database is not determined yet and will depend on the specific analysis methods selected.

Figure 1.4: Input Process

Figure 1.4 shows the data import process. The import process involves five steps:

Ingest: The ingest process converts the various data sources to standard raw data input formats that can be loaded into the database.

Clean: The cleaning process removes, corrects and fills missing raw input data as appropriate.

Characterize: The characterization process converts the raw input data into the formal input data.

Formalize: The formalization process converts the formal input data into the parameters of the formal models.

Normalize: The normalization process normalizes the formal model data so that it can be scale and offset as needed.

The result of the import process is a load profile that can be used to review, analyze and export load composition data.

1.3.2 Data Export

The data output processes select which data in the database is required for the conditions desired by the user. The data output format is specified by the Load Model Data Tool, as described in Appendix A and B.

Figure 1.5: Output Process

Figure 1.5 shows the data export process. The export process involves three steps:

Locate: The geographic location of the load composition is established.

Condition: The boundary conditions of the load composition is established.

Schedule: The date and time of the load composition is established.

Chapter 2

Data Sources

In order to create representative load models of different buildings, good quality data of different type and sources are required. Examples of data types that can be used to achieve such goal are:

- Electrical variables such as voltages, currents, and frequency and variables related to them such as energy and power at different time scales;
- Event data such as outages, under/over voltage, under/over frequency, transients and their time duration;
- End-use appliances;
- Type of buildings such as residential, office, industrial facility, laboratory, student dorms, etc, and building properties;
- Weather information such as temperature, solar irradiance, humidity, rain and geolocation;

There are multiple sources of data sets available online that provide many of the information listed above. However, data sets related to electrical variables and events are not easily found. Thus it becomes harder to have all the listed data available for each building. Below is a detailed description of some open sources end-use load data available online that is may be used in the analysis:

2.1 NEAA

The Northwest Energy Efficiency Alliance (NEEA) conducts regional studies primarily represented by the large building stock assessments in residential, commercial and industrial segments. The first studies reports were released in 2011 and 2012 and are currently the most recent data available. In 2016, new studies started and the first stage is focusing in residential and commercial building stock assessments. This is going until 2019. From 2020 to 2024 efforts will be shifted to industrial facilities.

2.1.1 RBSA

The Residential Building Stock Assessment (RBSA) is designed to develop a characterization of the residential sector - Idaho, Montana, Oregon and Washington states - that considers the diverse

climates, building practices and fuel choices across the region [2]. A few characteristics of this data set:

- Metered data: Aggregated at 15 minutes interval and provides total energy use as well as the time the use occurred for all devices monitored. This dataset spans for around 2 years and measures more than 100 homes - at the mains and appliance level. More details can be found in [3];

- Information about house construction (floor, walls, windows, insulation, number of rooms etc), type (single/double/triple-wide, prefab etc), vintage, occupancy, thermostat settings and other variables derived from those (i.e. heat loss) are provided. Details in [4];

- Electricity bill analysis providing statistics such as average annual kWh consumption per home by state and average electric energy use intensity per home by heating fuel type etc. Details in [4]

2.1.2 CBSA

The Commercial Building Stock Assessment provides a database of commercial building information for the Northwest. It includes more than 250 variables, including building type and functional use, building size, envelope, lighting and HVAC equipment. It also provides information on power usage based on building size, lighting and HVAC system.

Differently from the RBSA dataset, CBSA does not provide metered data of the participating buildings.

2.2 CEUS

The California Commercial End-Use Survey (CEUS) is primarily designed to support California's energy demand forecasting activities. A stratified random sample of 2,790 commercial facilities was collected from the service areas of Pacific Gas & Electric, San Diego Gas & Electric, Southern California Edison, Southern California Gas Company, and the Sacramento Municipal Utility District. The sample was stratified by utility service area, climate region, building type, and energy consumption level. A software tool developed for the CEUS project generates energy simulation models automatically from the on-site survey data. The software creates end-use load profiles and electricity and natural gas consumption estimates by end-use for user-defined commercial market segments. Its capabilities allow evaluation of energy efficiency measure installation, energy rate schedules, weather parameters, and many other scenarios against baseline usage patterns or conditions [5].

2.3 EPRI

The Electric Power Research Institute (EPRI) has been working on end-use load characterization for the electric power industry for several decades.

2.3.1 Load Shape Library

The Load Shape Library was developed to facilitate the collection and dissemination of a library electric load shapes by climate zone, geography and/or utility. The library is based on a database of end-use data aggregated over NERC regions, and includes whole premise data from major cities and residential efficiency technology measures, also aggregated by city, utility and climate zone. The data acquired is from multiple sources, including NEAA RBSA and EPRI's CEED PowerShape data. EPRI has continued to update and revise the library and the current version is 4.0, released in 2016. EPRI report the following key findings from the library:

- The Load Shape Library (LSL) presents best-available data which does not represent statistically-valid usage.
- Accuracy and vintage of load data determine the value and risk for use in utility applications. Users should treat the LSL data as a sample reference. Confidence and precision levels of the data are unknown.
- End-Use data from engineering models does not capture behavioral and other unobservable effects, thus rendering metered data as the preferred choice of the industry.
- End-use metered data acquired through a statistical sampling frame is widely preferred. High cost and intrusive nature of sub metering on customers continue to be key deterrents to broader utility efforts.
- EPRI's collaborative research is focused on driving down the cost of end-use metering through innovative, non-intrusive metering alternatives. Disaggregation techniques like NILM (Non-Intrusive Load Monitoring) and Conditional Demand Analysis using AMI data are under research and pilot testing. Other low-cost intrusive metering methods such as smart breaker panels and distributed sensors are also being researched.

2.4 eQuest

eQuest is a free software toll built on top of DOE2 software and designed for building energy analysis that can predict energy usage and cost for all types of buildings. It uses a description of the building layout, constructions, operating schedules, conditioning systems (lighting, HVAC, etc.) and utility rates provided by the user, along with weather data, to perform an hourly simulation of the building and to estimate utility bills [6].

2.5 Pecan Street

Pecan Street provides the Dataport which is the largest database of disaggregated residential customer energy data. The database contains electricity data collected from 722 houses in the US in which 631 in Texas, 49 in Colorado and 42 in California. The houses monitored include 501 single-family homes, 183 apartments, 35 town homes and 3 mobile homes. For each home, up to 3.25 years worth of data at the appliance level can be retrieved from this database. This data is sampled at the appliance and aggregate level in 1 minute interval [7].

2.6 REFIT Dataset

The REFIT Electrical Load Measurements dataset includes raw electrical consumption data in Watts for 20 households at aggregate and appliance level, timestamped and sampled at 8 second intervals. This dataset is intended to be used for research into energy conservation and advanced energy services, ranging from non-intrusive appliance load monitoring and modeling, demand response measures, tailored energy and retrofit advice, appliance usage analysis, consumption and time-use statistics and smart home/building automation [8].

2.7 Monitored Data

Differently from the other data sources described above, the monitored data will be acquired from monitoring systems implemented by Bonneville Power Administration, SLAC and other participating entities. This data includes measurements from different sources such as AMI, SCADA systems, PMUs etc, and at different levels in the system - mainly substation and building. In addition to the electrical variables, a survey of building loads are going to be collected.

2.7.1 SLAC site

Particularly at SLAC, event data such as voltage sags and swells, transients, outages, AMI and PMU data from the campus are going to be measured at three locations - two other points are also being considered as potential candidates. The first one is at the main substation (230kV) in the secondary of the transformer (12.47kV). Figure 2.1 shows a schematic of the main substation on campus and where the first measurement point, indicated by a red circle, is going to be located.

The second and third points are at building level. The buildings will share a similar characteristic: have considerable amount of motor loads. However a difference that is relevant for this study is that in one building the motors are inverter controlled. In addition to that, we are also interested in studying and identifying the effects of solar generation in our models and thus a building with such characteristic is also required. The first building chosen, *B1*, is an office building with 25kW of solar installation. The second building, *B2*, is a building with a a cooling tower and a chiller. Aside from these two buildings, a third one is being considered, *B3*, which includes 3 motors of 350 horsepower. Finally a last measurement point is being considered and that is at the secondary of the transformer (12.47kV) at the 60kV line in the main substation. This is an interesting point as it is connected to Stanford University campus. However, this feeder line is only used for back-up operations.

Instrumentation and Monitoring System Plan

As mentioned above, there are five potential measurement points at SLAC campus. Two are at the main substation and three at the building level. Among these five points only one, *B3*, does not have a measurement unit already in place. However, this point already has a current transformer (CT) and a power transformer (PT).

The other points that have measurement units in place use either ION model 7650 (master substation), 7350 (*B1*) or Eaton DP4000 (*B2*) and IQ 35M (*B1* solar meter).

The ION model 7650 has the following characteristics:

- **Power Quality Analysis and Compliance Monitoring**: Able to perform power quality measurements, adaptive waveform capture (events up to 60sec.), transient capture (16μs at 60Hz), up to 1024 samples per cycle, sag/swell monitoring;

- **Revenue Certified/Accurate Parameters**: Suitable for direct access billing and bill verification, bi-directional, 4 quadrant energy, transformer/line loss compensation;

- **Internet Connectivity**: Can use existing network to send information and log;

- **Communication and Integration Capability**: 5 communications ports and multi-protocol support for Modbus RTU, slave/master, DNP 3.0., Modbus TCP and Ethernet and modem gateways to 31 devices on RS-485 port;

- **GPS synchronization**

At SLAC, the measurements taken at the substation level are at 15 minutes interval for continuous acquisition of voltages and currents - and power - and at 1024 samples per cycle for events such as sags and swells, and transients. An example of a voltage sag event can be seen in Figure 2.2.

The ION model 7350 has the following characteristics:

- **Power Quality Analysis and Compliance Monitoring**: Able to perform power quality measurements, transient capture (16μs at 60Hz), up to 64 samples per cycle, sag/swell monitoring;

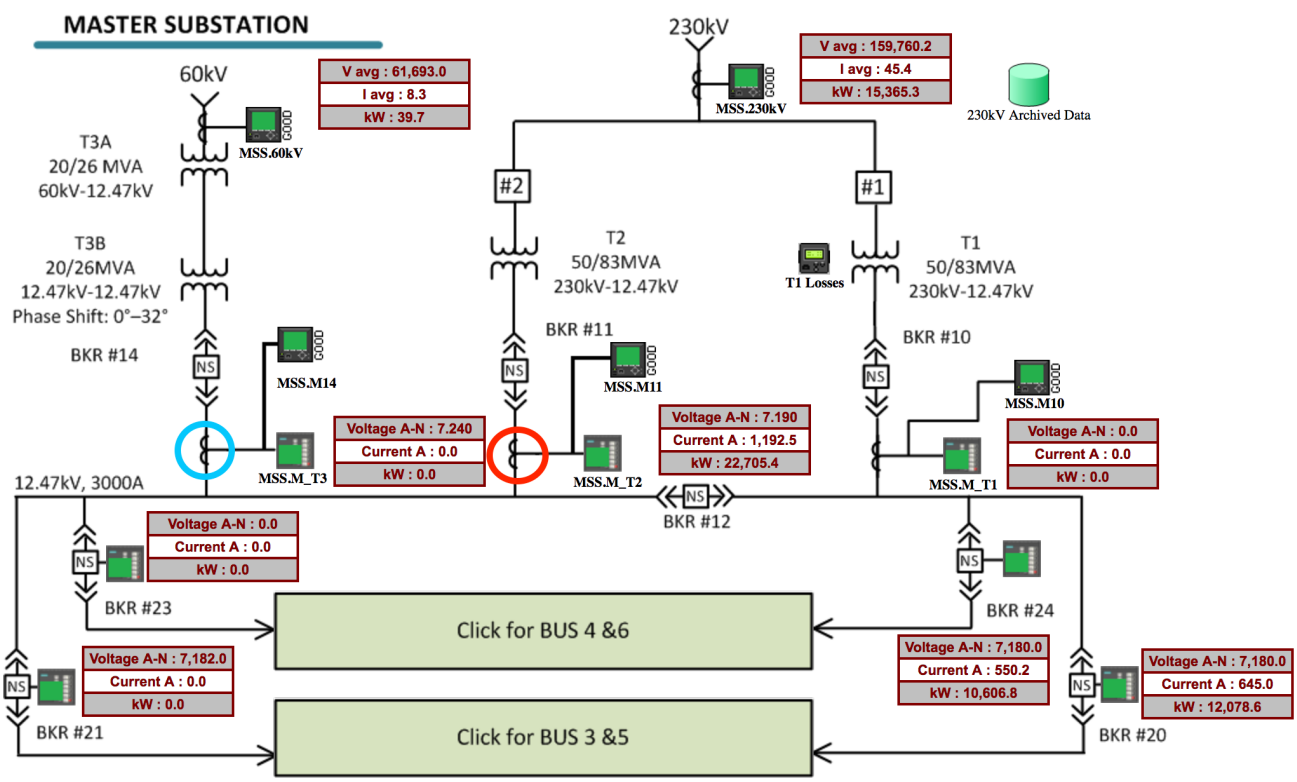

Figure 2.1: SLAC main substation. Measurement point at the main transformer's secondary (230kV-12.47kV) is indicated by the red circle and potential 60kV line measurement point is indicated by the blue circle.

- **Revenue Certified/Accurate Parameters**: Suitable for direct access billing and bill verification, bi-directional, 4 quadrant energy;
- **Internet Connectivity**: Can use existing network to send information and log;
- **Communication and Integration Capability**: 5 communications ports and multi-protocol support for Modbus RTU, slave/master, DNP 3.0., Modbus TCP and Ethernet and modem gateways to 31 devices on RS-485 port;

The measurements taken with ION-7350 are at the building *B1* mains with a continuous acquisition rate of 15 minutes for voltages, currents and power, and at 64 samples per cycle for events such as swells and sags and transients. An example of a voltage sag event measured at building *B1* can be seen in figure 2.3.

Eaton DP4000 is a much simpler measurement unit compared to the previous ones and has the following characteristics:

- **Power Monitoring**: Measures voltages and currents and percentage of total harmonic distortion (THD) for both variables. Also measures apparent, real and reactive power;
- **Communication and Integration Capability**: Interface capability to computer network for data collection and storage.

The measurements taken with Eaton DP4000 are taken at the building *B2* mains with a continuous acquisition rate of 15 minutes for voltages, currents and power. An example of a voltage measurement at building *B2* can be seen in Figure 2.4.

Eaton IQ35M is a meter utilized in renewable energy applications. A few of its characteristics are presented below:

- **Power Monitoring**: It is a bi-directional monitoring device capable of measuring voltages, currents, and powers - real, reactive and apparent. It also measures energy, power factor and

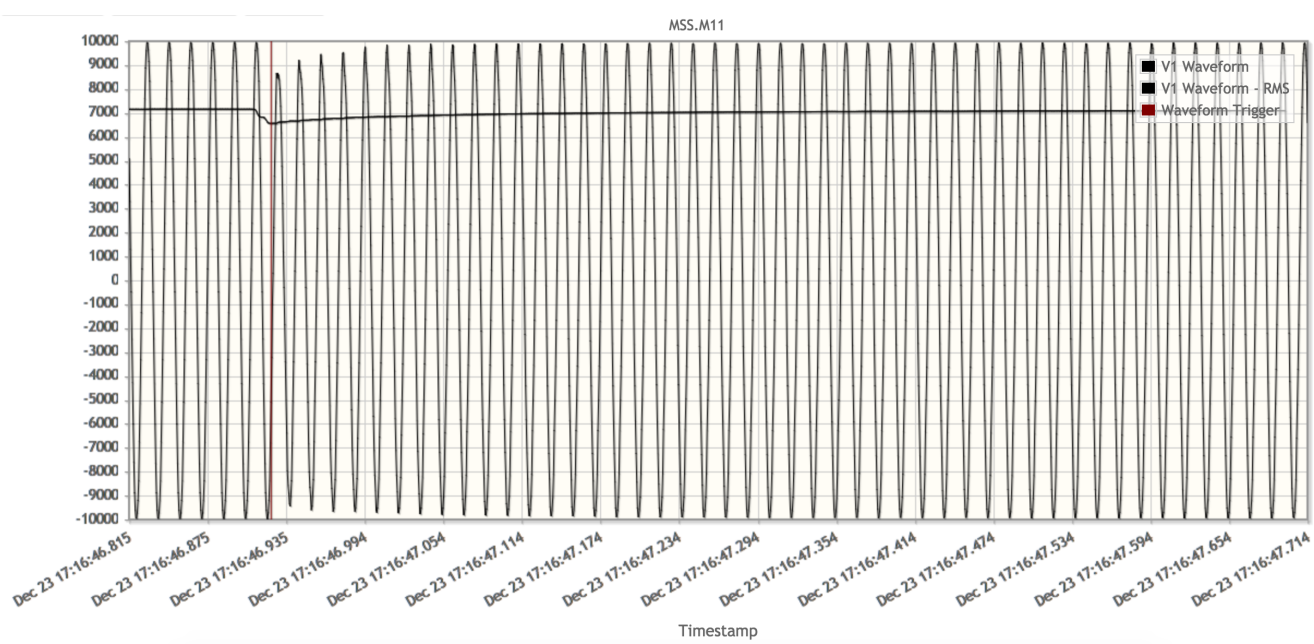

Figure 2.2: Example of voltage sag event measured at the master substation with ION-7650 device.

power demand. Its bi-directional feature allows measurement of power imported from the utility grid as well as power exported from the renewable energy source;

- **Communication and Integration Capability**: Interface capability to computer network for data collection and storage through RS-485 modbus RTU and BACnet.

This device is utilized to provide measurements from the solar panels located in building *B1*. Its continuous acquisition rate is 15 minutes interval for voltages, currents and power. An example of a power generation for a typical summer day is shown in Figure 2.5.

Besides the devices mentioned above which are the primary source of data, the two points at the

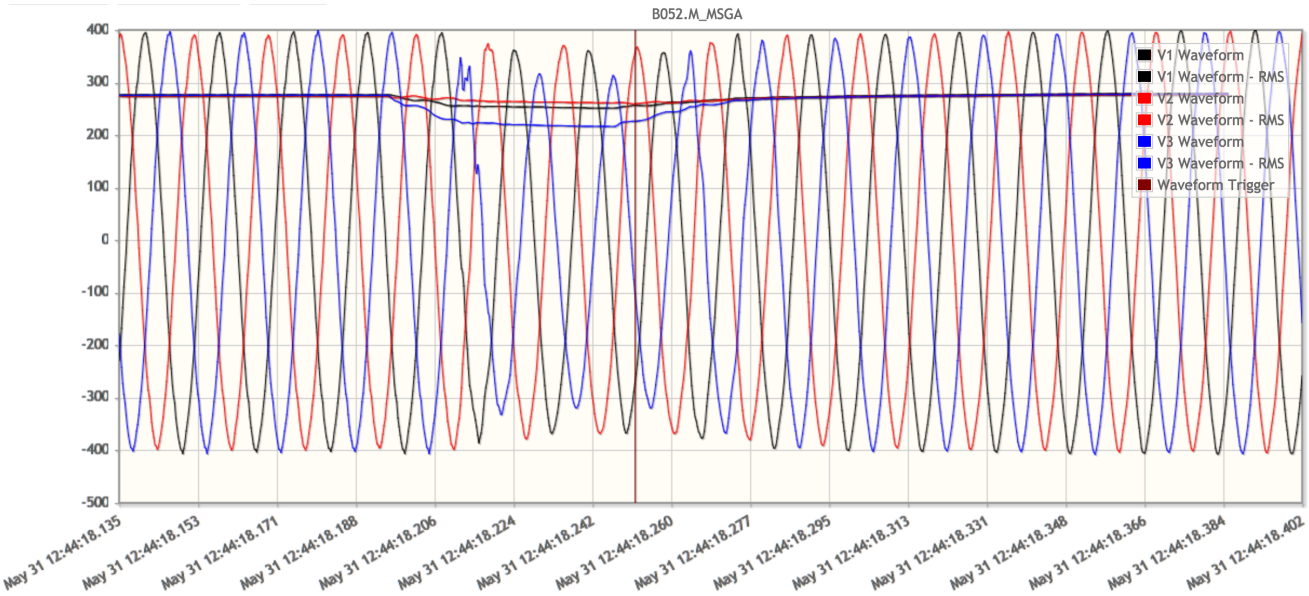

Figure 2.3: Example of voltage sag event measured in building *B1* with ION-7350 device.

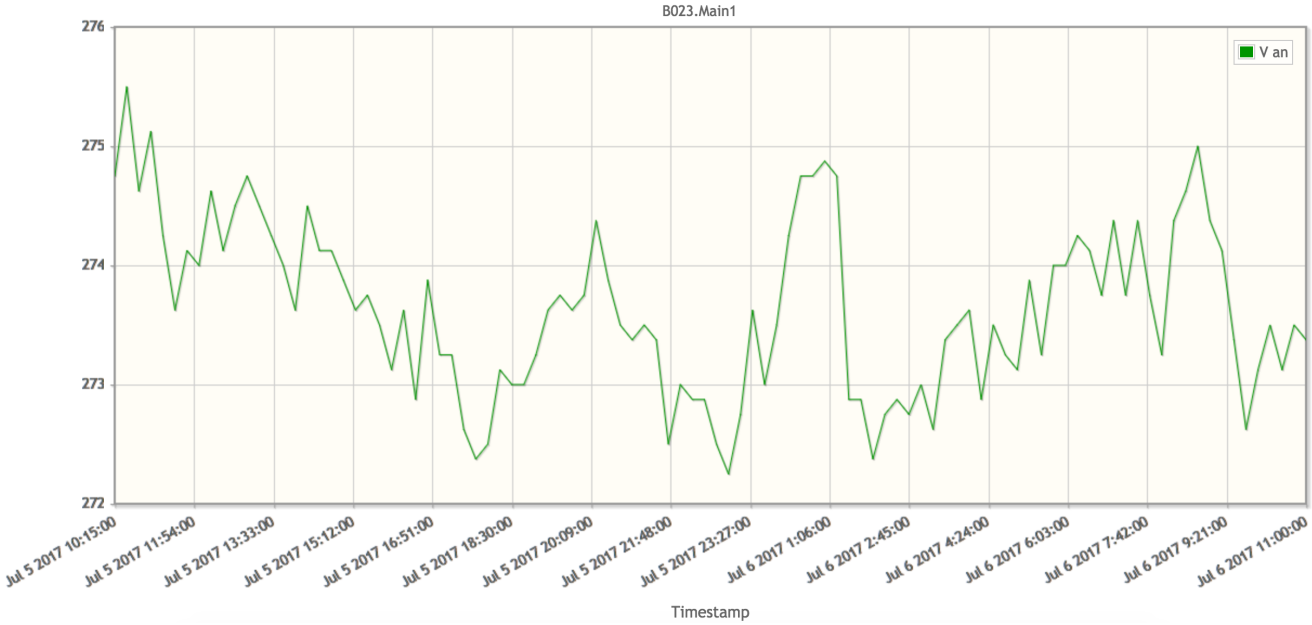

Figure 2.4: Example of voltage plot measured in building *B2* with Eaton DP4000 device.

main substation have also another measurement device, for redundancy - Schweitzer Engineering Laboratories SEL-734 and SEL-735 which can also be utilized.

2.7.2 Data Management

SLAC Campus

Data from the selected measurement points are going to be collected from the measurement equipment through their network port. Data is going to be routed using existing facility's network or cell modem, when network is not available, and stored in a web server managed by the Grid Integration System and Mobility group (GISMo) at SLAC. Data storage and management are going to follow all protection and privacy protocols required by the facility. Currently, all the data referred in the previous section are stored in SLAC's servers and available for access to any SLAC employee.

Synchronization is another aspect that needs to be considered. All *ION* equipment are synchronized through GPS. This is important as they not only measure voltages, currents and power but also events and transients which require a precise timing. The other data sources are synchronized through NTP.

Finally, correctly labeling of data according to the network topology such that measurement points are correctly assigned to the phases is critical. Many data sets available, including utilities data, are sometimes not correctly labeled and thus analysis under these data sets are most of the times compromised. To avoid this problem, a walk through the equipment installation with an on-site electrician is going to be performed. This will ensure the data collect is a true representation of the energy flow in the network.

Online Resources

Data collected from online resources are going to be stored in the same database as the ones collected from campus.

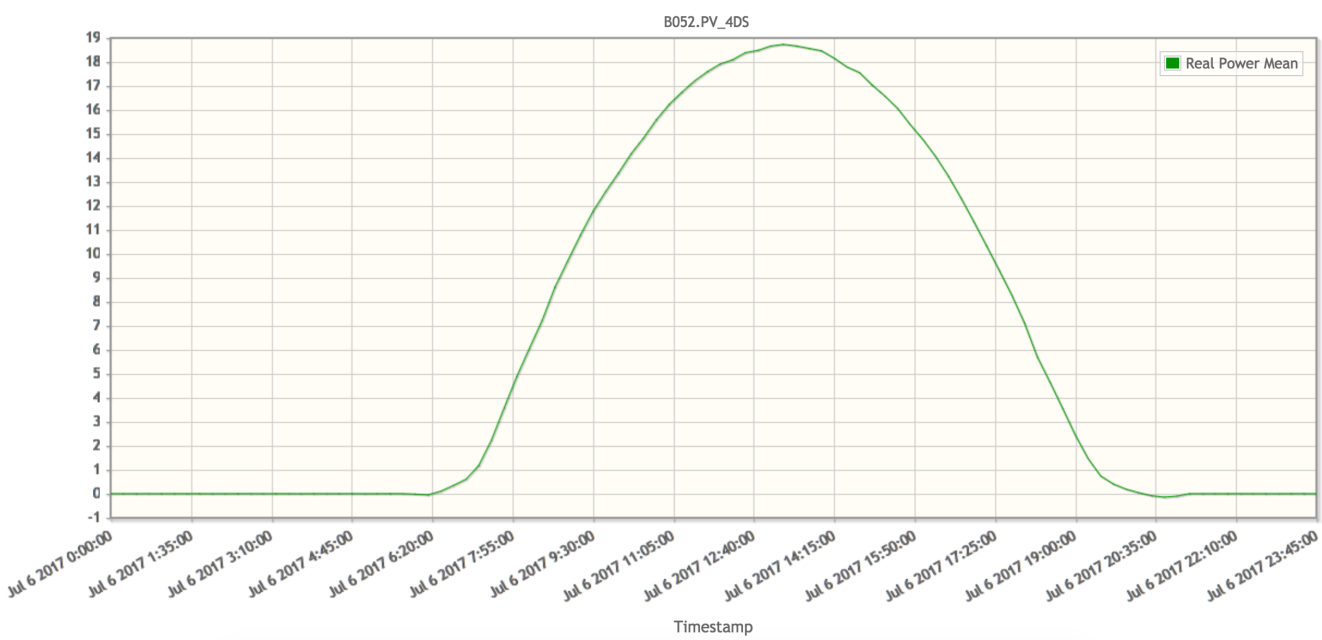

Figure 2.5: Example of real power generation of a solar panel located in *B1*.

Chapter 3

Analytics

Three basic types of analysis must be conducted on data collected from power system in order to obtain information about end-use loads: network state, supply state, and demand state.

3.1 Network State

To make sure network data collected from different sources in the field can be utilized in algorithms for planning and operational purposes, knowledge of the network and its structure is necessary. Verifying the topological connectivity and correctly matching phasing with sensor data is detrimental for a correct analysis. Although these seem obvious, it turns out it is a very common problem when dealing such data. Utilities and private entities deploy many equipment in the field such as AMI, DFR (digital fault recorders) and PQE (Power Quality Equipment) and when accounting for human errors in labeling and installation, many records are incorrect. In private discussions with some utilities, it is estimated that about one third of all AMI have incorrect phasing labels, therefore making them useless in any real power flow modeling, specially for DER integration. The labor cost to verify all connectivity information is feasible, but may be prohibitively expensive. Therefore an important question is whether the large amount of AMI (power and voltage time series), can be used to recover the correct connectivity and phasing, correcting human errors in the GIS (Geographic Information System) data along the way [9].

One approach to solve this problem is presented in [10]. There, graphical models are utilized for structure learning. For example, a distribution system can be seen as a graphical model with unknown connectivity but with end node voltage observations. Therefore determining the connectivity from sensor measurements is equivalent to determining the structure of the graphical model. Details of this model can be found in [10]. This model leads to a probability distribution of the entire vector of voltage time series.

The key insight is to treat each node as a random variable in the graphical model where between any two nodes, conditional independence is determined by computing the time-series mutual information metric and apply the Chow Liu Algorithm [11]. This work has shown significant improvement over existing correlation and heuristic analysis techniques.

3.2 Supply State

Another important information when doing such analysis is the supply state. This becomes relevant nowadays as penetration of DER grows. In many distribution system, utilities may not know

the location and capacity of installed PV on the network. This works in the context of net-metering, but leads to difficulties in utility operation in terms of modeling and understanding where difficulties will arise in terms of localized overproduction.

In [12], the problem is addressed as a problem of solar disaggregation given a very large number of net metered residential units and sparse solar proxies that a utility can control. Solar proxy information can be high data rate SCADA connected PV sites or irradiance sensors in a region. The problem is formulated as a source separation problem, which borrows much from disaggregation literature [13]. It is composed of a historic and real-time problem. The former separates the supply and demand of energy from batch analysis of net-metered AMI and solar proxy information and is utilized for planning. The later, separates the supply and demand of energy from real time SCADA measurements of net load and real time solar proxy information and is utilized in an operational setting.

3.3 Demand State

The last analysis to be done in order to obtain information about end-use loads is demand state. Real time load at all points is a primitive for running such analysis. Therefore, the task of load forecasting can be seen as a primitive generating procedure. Load forecasts are crucial to running power flow solutions for operational and contingency analysis. In the case of AMI, the forecast horizons are on the order of 2-3 hrs up to 1 day ahead, depending on the delays introduced on the network, and data collection systems. Various studies have shown the difficulty of forecasting AMI data at the level of individual homes or premises. However, the accuracy can improve considerably if the end-point in question is a small aggregate of loads [9]. This means the forecast accuracy improves with the aggregation.

Recent work on forecasting of individual customers, are the following: [14], [15], [16], [17], [18], [19], [20]. Various methods have shown varying success, and have hinted at the scaling which is shown in [9]. These methods are going to be tested in this study to verify their accuracy for the purposes of this work.

Chapter 4

Outputs

This chapter describes the principal components of the Export block shown in Fig. 1.3. The data format of all output must be compatible with the Load Model Data Tool Version 2.1, which is based on the Light Load Composition Data worksheet originally released by BPA in 2014.

For residential loads, all data is specified in kW per residence as shown in Table 4.1. The end-uses listed correspond to those for which data is widely available, with the exception of miscellaneous loads and electric vehicle loads, which are made available for future use. In the case of multi-family buildings, the loads are provided per sub-unit, e.g., per apartment, condo, or townhome.

For commercial loads, all data is specified in kW per building as shown in Table 4.2. The end-uses listed correspond to those for which data is widely available across all commercial building types. The list of commercial building types supported is given in Table C.1.

Table 4.1: Residential Output Data

Parameter	Column name	Description
Climate code	Climate	Climate region code (see Table D.1)
Day code	Day	Day code (see Table D.2)
Hour code	Hour	Hour code (hour of day, 1–24)
Index code	Index	Load index code (*climate_day_hour*)
Heating load	Heating	Average heating load (in kW). Note that heating load may be mix of coils and compressors.
Cooling loads	Cooling	Average cooling load (in kW). Note that cooling loads are entirely compressors.
Ventilation loads	Vent	Average ventilation fan load (in kW).
Water heating loads	WaterHeat	Average water heating coil load (in kW). Note that an emerging number of waterheaters use heat pumps.
Cooking loads	Cooking	Average electric stove and range load (in kW)
Refrigeration loads	Refrig	Average refrigeration load (in kW). Note that refrigerators include compressor motors.
Exterior lighting loads	ExtLight	Average exterior lighting load (in kW).
Interior lighting loads	IntLight	Average interior lighting load (in kW).
Electronic loads	Electronics	Average power electronic equipment load (in kW).
Appliance loads	Appliances	Average white good appliance load (in kW). Note that many appliances include various motor types.
Miscellaneous loads	Misc	Average miscellaneous load (in kW). Note that some loads include various motor types and power electronics.
Vehicles loads	Vehicle	Average electric vehicle charger load (in kW). Note that chargers are power electronic equipment.

Table 4.2: Commercial Output Data

Paramater	Column name	Description
Climate code	Climate	Climate region code (see Table D.1)
Day code	Day	Day code (see Table D.2)
Hour code	Hour	Hour code (hour of day, 1–24)
Index code	Index	Load index code (*climate_day_hour*)
Heating load	Heating	Average heating load (in kW). Note that heating load may be mix of coils and compressors.
Cooling loads	Cooling	Average cooling load (in kW). Note that cooling loads are entirely compressors.
Ventilation loads	Vent	Average ventilation fan load (in kW).
Water heating loads	WaterHeat	Average water heating coil load (in kW). Note that an emerging number of waterheaters use heat pumps.
Cooking loads	Cooking	Average electric stove and range load (in kW)
Refrigeration loads	Refrig	Average refrigeration load (in kW). Note that refrigerators include compressor motors.
Exterior lighting loads	ExtLight	Average exterior lighting load (in kW).
Interior lighting loads	IntLight	Average interior lighting load (in kW).
Office equipment	OfficeEquip	Average office equipment load (in kW). Note that the majority of office equipment is assumed to be power electronic load.
Miscellaneous loads	Misc	Average miscellaneous load (in kW). Note that some loads include various motor types.
Process equipment	ProcEquip	Average process equipment load (in kW). Note that some loads include various motor types.
Motor loads	Motors	Average process motor load (in kW). Note that some motor loads include power electronic load types.
Air compression loads	AirComp	Average air compressor load (in kW). Note that this load type is assumed to be associate with a mix of motor D and electronic loads.

Chapter 5

Conclusions

This document described the workflow for advancing the load model composition. It provided information and characteristics from the different data sources that will be utilized. It also provided a high level description of the procedure that is going to be followed. Data ingestion which involves all data pre-processing, storage, analytics and expected outputs were described. Finally, this report also provided a detailed description of the real dataset that is going to be collected from SLAC campus and specification of the instrumentation and type of loads.

This workflow is going to be used throughout the project as a means of standardizing the procedure and ensuring consistency, reproducibility, and accountability of the analysis and results.

Appendix A

Residential Model Data

Table A.1: Residential load model data example input for Load Model Data Tool Version 2.1. (Note: values shown in kW.)

Climate	Day	Hour	Heating	Cooling	Vent	WaterHeat	Cooking	Refrig	ExtLight	IntLight	Electronics	Appliances
NWC	1	1	-	-	0.025	0.118	0.007	0.1	-	0.19	0.05	0.044
NWC	1	2	-	-	0.025	0.09	0.006	0.1	-	0.17	0.05	0.019
NWC	1	3	-	-	0.025	0.073	0.005	0.1	-	0.16	0.05	0.011
NWC	1	4	-	-	0.025	0.068	0.005	0.1	-	0.16	0.05	0.009
NWC	1	5	-	-	0.025	0.084	0.006	0.1	-	0.16	0.05	0.01
NWC	1	6	-	-	0.025	0.146	0.009	0.1	-	0.175	0.05	0.028
NWC	1	7	-	-	0.025	0.287	0.019	0.1	-	0.205	0.05	0.075
NWC	1	8	-	-	0.025	0.428	0.03	0.1	-	0.225	0.1	0.133
NWC	1	9	-	-	0.025	0.433	0.033	0.1	-	0.225	0.1	0.168
NWC	1	10	-	-	0.025	0.428	0.032	0.1	-	0.225	0.1	0.21
NWC	1	11	-	-	0.025	0.399	0.032	0.1	-	0.225	0.1	0.231
NWC	1	12	-	-	0.025	0.343	0.04	0.1	-	0.225	0.1	0.228
NWC	1	13	-	0.015	0.027	0.304	0.043	0.1	-	0.225	0.1	0.207
NWC	1	14	-	0.086	0.038	0.276	0.035	0.1	-	0.22	0.1	0.193
NWC	1	15	-	0.137	0.046	0.242	0.033	0.1	-	0.22	0.12	0.171
NWC	1	16	-	0.177	0.052	0.231	0.04	0.1	-	0.225	0.12	0.165
NWC	1	17	-	0.2	0.055	0.242	0.071	0.1	-	0.235	0.15	0.172
NWC	1	18	-	0.21	0.057	0.293	0.126	0.1	-	0.255	0.23	0.182
NWC	1	19	-	0.212	0.057	0.338	0.111	0.1	-	0.27	0.25	0.191
NWC	1	20	-	0.158	0.049	0.338	0.065	0.1	-	0.28	0.25	0.198
NWC	1	21	-	0.079	0.037	0.332	0.04	0.1	-	0.315	0.23	0.203
NWC	1	22	-	-	0.025	0.338	0.029	0.1	-	0.355	0.2	0.206
NWC	1	23	-	-	0.025	0.309	0.017	0.1	-	0.325	0.15	0.168
NWC	1	24	-	-	0.025	0.208	0.01	0.1	-	0.245	0.1	0.098
NWV	1	1	-	-	0.025	0.095	0.005	0.1	-	0.19	0.05	0.044
NWV	1	2	-	-	0.025	0.072	0.005	0.1	-	0.17	0.05	0.019
NWV	1	3	-	-	0.025	0.059	0.004	0.1	-	0.16	0.05	0.011
NWV	1	4	-	-	0.025	0.054	0.004	0.1	-	0.16	0.05	0.009
NWV	1	5	-	-	0.025	0.068	0.005	0.1	-	0.16	0.05	0.01
NWV	1	6	-	-	0.025	0.117	0.007	0.1	-	0.175	0.05	0.028
NWV	1	7	-	-	0.025	0.23	0.015	0.1	-	0.205	0.05	0.075
NWV	1	8	-	-	0.025	0.342	0.024	0.1	-	0.225	0.1	0.133
NWV	1	9	-	-	0.025	0.347	0.026	0.1	-	0.225	0.1	0.168
NWV	1	10	-	0.004	0.026	0.342	0.025	0.1	-	0.225	0.1	0.21
NWV	1	11	-	0.106	0.041	0.32	0.025	0.1	-	0.225	0.1	0.231
NWV	1	12	-	0.227	0.059	0.275	0.032	0.1	-	0.225	0.1	0.228
NWV	1	13	-	0.399	0.085	0.243	0.034	0.1	-	0.225	0.1	0.207
NWV	1	14	-	0.594	0.114	0.221	0.028	0.1	-	0.22	0.1	0.193
NWV	1	15	-	0.731	0.135	0.194	0.026	0.1	-	0.22	0.12	0.171
NWV	1	16	-	0.84	0.151	0.185	0.032	0.1	-	0.225	0.12	0.165
NWV	1	17	-	0.901	0.16	0.194	0.056	0.1	-	0.235	0.15	0.172
NWV	1	18	-	0.927	0.164	0.234	0.101	0.1	-	0.255	0.23	0.182
NWV	1	19	-	0.934	0.165	0.27	0.089	0.1	-	0.27	0.25	0.191
NWV	1	20	-	0.783	0.142	0.27	0.052	0.1	-	0.28	0.25	0.198
NWV	1	21	-	0.567	0.11	0.266	0.032	0.1	-	0.315	0.23	0.203
NWV	1	22	-	0.322	0.073	0.27	0.023	0.1	-	0.355	0.2	0.206
NWV	1	23	-	0.111	0.042	0.248	0.014	0.1	-	0.325	0.15	0.168
NWV	1	24	-	-	0.025	0.167	0.008	0.1	-	0.245	0.1	0.098
NWI	1	1	-	0.156	0.048	0.118	0.007	0.1	-	0.19	0.05	0.044
NWI	1	2	-	0.07	0.036	0.09	0.006	0.1	-	0.17	0.05	0.019
NWI	1	3	-	-	0.025	0.073	0.005	0.1	-	0.16	0.05	0.011
NWI	1	4	-	-	0.025	0.068	0.005	0.1	-	0.16	0.05	0.009
NWI	1	5	-	-	0.025	0.084	0.006	0.1	-	0.16	0.05	0.01
NWI	1	6	-	-	0.025	0.146	0.009	0.1	-	0.175	0.05	0.028
NWI	1	7	-	-	0.025	0.287	0.019	0.1	-	0.205	0.05	0.075
NWI	1	8	-	-	0.025	0.428	0.03	0.1	-	0.225	0.1	0.133
NWI	1	9	-	0.161	0.049	0.433	0.033	0.1	-	0.225	0.1	0.168
NWI	1	10	-	0.371	0.081	0.428	0.032	0.1	-	0.225	0.1	0.21
NWI	1	11	-	0.501	0.1	0.399	0.032	0.1	-	0.225	0.1	0.231
NWI	1	12	-	0.659	0.124	0.343	0.04	0.1	-	0.225	0.1	0.228

Climate	Day	Hour	Heating	Cooling	Vent	WaterHeat	Cooking	Refrig	ExtLight	IntLight	Electronics	Appliances
NWI	1	13	-	0.883	0.157	0.304	0.043	0.1	-	0.225	0.1	0.207
NWI	1	14	-	1.133	0.195	0.276	0.035	0.1	-	0.22	0.1	0.193
NWI	1	15	-	1.308	0.221	0.242	0.033	0.1	-	0.22	0.12	0.171
NWI	1	16	-	1.448	0.242	0.231	0.04	0.1	-	0.225	0.12	0.165
NWI	1	17	-	1.525	0.254	0.242	0.071	0.1	-	0.235	0.15	0.172
NWI	1	18	-	1.558	0.259	0.293	0.126	0.1	-	0.255	0.23	0.182
NWI	1	19	-	1.566	0.26	0.338	0.111	0.1	-	0.27	0.25	0.191
NWI	1	20	-	1.37	0.23	0.338	0.065	0.1	-	0.28	0.25	0.198
NWI	1	21	-	1.09	0.189	0.332	0.04	0.1	-	0.315	0.23	0.203
NWI	1	22	-	0.774	0.141	0.338	0.029	0.1	-	0.355	0.2	0.206
NWI	1	23	-	0.502	0.1	0.309	0.017	0.1	-	0.325	0.15	0.168
NWI	1	24	-	0.293	0.069	0.208	0.01	0.1	-	0.245	0.1	0.098
RMN	1	1	-	-	0.025	0.032	0.002	0.1	-	0.19	0.05	0.044
RMN	1	2	-	-	0.025	0.024	0.002	0.1	-	0.17	0.05	0.019
RMN	1	3	-	-	0.025	0.02	0.001	0.1	-	0.16	0.05	0.011
RMN	1	4	-	-	0.025	0.018	0.001	0.1	-	0.16	0.05	0.009
RMN	1	5	-	-	0.025	0.023	0.002	0.1	-	0.16	0.05	0.01
RMN	1	6	-	-	0.025	0.039	0.002	0.1	-	0.175	0.05	0.028
RMN	1	7	-	-	0.025	0.077	0.005	0.1	-	0.205	0.05	0.075
RMN	1	8	-	-	0.025	0.114	0.008	0.1	-	0.225	0.1	0.133
RMN	1	9	-	-	0.025	0.116	0.009	0.1	-	0.225	0.1	0.168
RMN	1	10	-	-	0.025	0.114	0.008	0.1	-	0.225	0.1	0.21
RMN	1	11	-	-	0.025	0.107	0.008	0.1	-	0.225	0.1	0.231
RMN	1	12	-	-	0.025	0.092	0.011	0.1	-	0.225	0.1	0.228
RMN	1	13	-	0.012	0.027	0.081	0.011	0.1	-	0.225	0.1	0.207
RMN	1	14	-	0.069	0.035	0.074	0.009	0.1	-	0.22	0.1	0.193
RMN	1	15	-	0.11	0.041	0.065	0.009	0.1	-	0.22	0.12	0.171
RMN	1	16	-	0.142	0.046	0.062	0.011	0.1	-	0.225	0.12	0.165
RMN	1	17	-	0.16	0.049	0.065	0.019	0.1	-	0.235	0.15	0.172
RMN	1	18	-	0.168	0.05	0.078	0.034	0.1	-	0.255	0.23	0.182
RMN	1	19	-	0.17	0.05	0.09	0.03	0.1	-	0.27	0.25	0.191
RMN	1	20	-	0.127	0.044	0.09	0.017	0.1	-	0.28	0.25	0.198
RMN	1	21	-	0.063	0.035	0.089	0.011	0.1	-	0.315	0.23	0.203
RMN	1	22	-	-	0.025	0.09	0.008	0.1	-	0.355	0.2	0.206
RMN	1	23	-	-	0.025	0.083	0.005	0.1	-	0.325	0.15	0.168
RMN	1	24	-	-	0.025	0.056	0.003	0.1	-	0.245	0.1	0.098
NCC	1	1	-	-	0.025	0.032	0.002	0.1	-	0.19	0.05	0.044
NCC	1	2	-	-	0.025	0.024	0.002	0.1	-	0.17	0.05	0.019
NCC	1	3	-	-	0.025	0.02	0.001	0.1	-	0.16	0.05	0.011
NCC	1	4	-	-	0.025	0.018	0.001	0.1	-	0.16	0.05	0.009
NCC	1	5	-	-	0.025	0.023	0.002	0.1	-	0.16	0.05	0.01
NCC	1	6	-	-	0.025	0.039	0.002	0.1	-	0.175	0.05	0.028
NCC	1	7	-	-	0.025	0.077	0.005	0.1	-	0.205	0.05	0.075
NCC	1	8	-	-	0.025	0.114	0.008	0.1	-	0.225	0.1	0.133
NCC	1	9	-	-	0.025	0.116	0.009	0.1	-	0.225	0.1	0.168
NCC	1	10	-	-	0.025	0.114	0.008	0.1	-	0.225	0.1	0.21
NCC	1	11	-	-	0.025	0.107	0.008	0.1	-	0.225	0.1	0.231
NCC	1	12	-	0.015	0.027	0.092	0.011	0.1	-	0.225	0.1	0.228
NCC	1	13	-	0.113	0.042	0.081	0.011	0.1	-	0.225	0.1	0.207
NCC	1	14	-	0.224	0.059	0.074	0.009	0.1	-	0.22	0.1	0.193
NCC	1	15	-	0.303	0.07	0.065	0.009	0.1	-	0.22	0.12	0.171
NCC	1	16	-	0.366	0.08	0.062	0.011	0.1	-	0.225	0.12	0.165
NCC	1	17	-	0.401	0.085	0.065	0.019	0.1	-	0.235	0.15	0.172
NCC	1	18	-	0.416	0.087	0.078	0.034	0.1	-	0.255	0.23	0.182
NCC	1	19	-	0.42	0.088	0.09	0.03	0.1	-	0.27	0.25	0.191
NCC	1	20	-	0.335	0.075	0.09	0.017	0.1	-	0.28	0.25	0.198
NCC	1	21	-	0.211	0.057	0.089	0.011	0.1	-	0.315	0.23	0.203
NCC	1	22	-	0.072	0.036	0.09	0.008	0.1	-	0.355	0.2	0.206
NCC	1	23	-	-	0.025	0.083	0.005	0.1	-	0.325	0.15	0.168
NCC	1	24	-	-	0.025	0.056	0.003	0.1	-	0.245	0.1	0.098
NCV	1	1	-	0.194	0.054	0.032	0.002	0.1	-	0.19	0.05	0.044
NCV	1	2	-	0.088	0.038	0.024	0.002	0.1	-	0.17	0.05	0.019
NCV	1	3	-	-	0.025	0.02	0.001	0.1	-	0.16	0.05	0.011
NCV	1	4	-	-	0.025	0.018	0.001	0.1	-	0.16	0.05	0.009
NCV	1	5	-	-	0.025	0.023	0.002	0.1	-	0.16	0.05	0.01
NCV	1	6	-	-	0.025	0.039	0.002	0.1	-	0.175	0.05	0.028
NCV	1	7	-	-	0.025	0.077	0.005	0.1	-	0.205	0.05	0.075
NCV	1	8	-	-	0.025	0.114	0.008	0.1	-	0.225	0.1	0.133
NCV	1	9	-	0.201	0.055	0.116	0.009	0.1	-	0.225	0.1	0.168
NCV	1	10	-	0.464	0.095	0.114	0.008	0.1	-	0.225	0.1	0.21
NCV	1	11	-	0.627	0.119	0.107	0.008	0.1	-	0.225	0.1	0.231
NCV	1	12	-	0.824	0.149	0.092	0.011	0.1	-	0.225	0.1	0.228
NCV	1	13	-	1.104	0.191	0.081	0.011	0.1	-	0.225	0.1	0.207
NCV	1	14	-	1.416	0.237	0.074	0.009	0.1	-	0.22	0.1	0.193
NCV	1	15	-	1.635	0.27	0.065	0.009	0.1	-	0.22	0.12	0.171
NCV	1	16	-	1.81	0.296	0.062	0.011	0.1	-	0.225	0.12	0.165
NCV	1	17	-	1.906	0.311	0.065	0.019	0.1	-	0.235	0.15	0.172
NCV	1	18	-	1.947	0.317	0.078	0.034	0.1	-	0.255	0.23	0.182
NCV	1	19	-	1.957	0.319	0.09	0.03	0.1	-	0.27	0.25	0.191
NCV	1	20	-	1.712	0.282	0.09	0.017	0.1	-	0.28	0.25	0.198
NCV	1	21	-	1.363	0.229	0.089	0.011	0.1	-	0.315	0.23	0.203
NCV	1	22	-	0.968	0.17	0.09	0.008	0.1	-	0.355	0.2	0.206
NCV	1	23	-	0.627	0.119	0.083	0.005	0.1	-	0.325	0.15	0.168
NCV	1	24	-	0.366	0.08	0.056	0.003	0.1	-	0.245	0.1	0.098
NCI	1	1	-	-	0.025	0.032	0.002	0.1	-	0.19	0.05	0.044
NCI	1	2	-	-	0.025	0.024	0.002	0.1	-	0.17	0.05	0.019
NCI	1	3	-	-	0.025	0.02	0.001	0.1	-	0.16	0.05	0.011
NCI	1	4	-	-	0.025	0.018	0.001	0.1	-	0.16	0.05	0.009
NCI	1	5	-	-	0.025	0.023	0.002	0.1	-	0.16	0.05	0.01
NCI	1	6	-	-	0.025	0.039	0.002	0.1	-	0.175	0.05	0.028
NCI	1	7	-	-	0.025	0.077	0.005	0.1	-	0.205	0.05	0.075
NCI	1	8	-	-	0.025	0.114	0.008	0.1	-	0.225	0.1	0.133
NCI	1	9	-	-	0.025	0.116	0.009	0.1	-	0.225	0.1	0.168
NCI	1	10	-	0.005	0.026	0.114	0.008	0.1	-	0.225	0.1	0.21
NCI	1	11	-	0.127	0.044	0.107	0.008	0.1	-	0.225	0.1	0.231

Climate	Day	Hour	Heating	Cooling	Vent	WaterHeat	Cooking	Refrig	ExtLight	IntLight	Electronics	Appliances
NCI	1	12	-	0.272	0.066	0.092	0.011	0.1	-	0.225	0.1	0.228
NCI	1	13	-	0.479	0.097	0.081	0.011	0.1	-	0.225	0.1	0.207
NCI	1	14	-	0.712	0.132	0.074	0.009	0.1	-	0.22	0.1	0.193
NCI	1	15	-	0.877	0.157	0.065	0.009	0.1	-	0.22	0.12	0.171
NCI	1	16	-	1.009	0.176	0.062	0.011	0.1	-	0.225	0.12	0.165
NCI	1	17	-	1.081	0.187	0.065	0.019	0.1	-	0.235	0.15	0.172
NCI	1	18	-	1.113	0.192	0.078	0.034	0.1	-	0.255	0.23	0.182
NCI	1	19	-	1.121	0.193	0.09	0.03	0.1	-	0.27	0.25	0.191
NCI	1	20	-	0.94	0.166	0.09	0.017	0.1	-	0.28	0.25	0.198
NCI	1	21	-	0.68	0.127	0.089	0.011	0.1	-	0.315	0.23	0.203
NCI	1	22	-	0.387	0.083	0.09	0.008	0.1	-	0.355	0.2	0.206
NCI	1	23	-	0.133	0.045	0.083	0.005	0.1	-	0.325	0.15	0.168
NCI	1	24	-	-	0.025	0.056	0.003	0.1	-	0.245	0.1	0.098
SCC	1	1	-	-	0.025	0.032	0.002	0.1	-	0.19	0.05	0.044
SCC	1	2	-	-	0.025	0.024	0.002	0.1	-	0.17	0.05	0.019
SCC	1	3	-	-	0.025	0.02	0.001	0.1	-	0.16	0.05	0.011
SCC	1	4	-	-	0.025	0.018	0.001	0.1	-	0.16	0.05	0.009
SCC	1	5	-	-	0.025	0.023	0.002	0.1	-	0.16	0.05	0.01
SCC	1	6	-	-	0.025	0.039	0.002	0.1	-	0.175	0.05	0.028
SCC	1	7	-	-	0.025	0.077	0.005	0.1	-	0.205	0.05	0.075
SCC	1	8	-	-	0.025	0.114	0.008	0.1	-	0.225	0.1	0.133
SCC	1	9	-	-	0.025	0.116	0.009	0.1	-	0.225	0.1	0.168
SCC	1	10	-	-	0.025	0.114	0.008	0.1	-	0.225	0.1	0.21
SCC	1	11	-	-	0.025	0.107	0.008	0.1	-	0.225	0.1	0.231
SCC	1	12	-	0.015	0.027	0.092	0.011	0.1	-	0.225	0.1	0.228
SCC	1	13	-	0.113	0.042	0.081	0.011	0.1	-	0.225	0.1	0.207
SCC	1	14	-	0.224	0.059	0.074	0.009	0.1	-	0.22	0.1	0.193
SCC	1	15	-	0.303	0.07	0.065	0.009	0.1	-	0.22	0.12	0.171
SCC	1	16	-	0.366	0.08	0.062	0.011	0.1	-	0.225	0.12	0.165
SCC	1	17	-	0.401	0.085	0.065	0.019	0.1	-	0.235	0.15	0.172
SCC	1	18	-	0.416	0.087	0.078	0.034	0.1	-	0.255	0.23	0.182
SCC	1	19	-	0.42	0.088	0.09	0.03	0.1	-	0.27	0.25	0.191
SCC	1	20	-	0.335	0.075	0.09	0.017	0.1	-	0.28	0.25	0.198
SCC	1	21	-	0.211	0.057	0.089	0.011	0.1	-	0.315	0.23	0.203
SCC	1	22	-	0.072	0.036	0.09	0.008	0.1	-	0.355	0.2	0.206
SCC	1	23	-	-	0.025	0.083	0.005	0.1	-	0.325	0.15	0.168
SCC	1	24	-	-	0.025	0.056	0.003	0.1	-	0.245	0.1	0.098
SCV	1	1	-	0.423	0.088	0.032	0.002	0.1	-	0.19	0.05	0.044
SCV	1	2	-	0.312	0.072	0.024	0.002	0.1	-	0.17	0.05	0.019
SCV	1	3	-	0.189	0.053	0.02	0.001	0.1	-	0.16	0.05	0.011
SCV	1	4	-	0.091	0.039	0.018	0.001	0.1	-	0.16	0.05	0.009
SCV	1	5	-	-	0.025	0.023	0.002	0.1	-	0.16	0.05	0.01
SCV	1	6	-	-	0.025	0.039	0.002	0.1	-	0.175	0.05	0.028
SCV	1	7	-	-	0.025	0.077	0.005	0.1	-	0.205	0.05	0.075
SCV	1	8	-	0.133	0.045	0.114	0.008	0.1	-	0.225	0.1	0.133
SCV	1	9	-	0.434	0.09	0.116	0.009	0.1	-	0.225	0.1	0.168
SCV	1	10	-	0.707	0.131	0.114	0.008	0.1	-	0.225	0.1	0.21
SCV	1	11	-	0.874	0.156	0.107	0.008	0.1	-	0.225	0.1	0.231
SCV	1	12	-	1.079	0.187	0.092	0.011	0.1	-	0.225	0.1	0.228
SCV	1	13	-	1.37	0.23	0.081	0.011	0.1	-	0.225	0.1	0.207
SCV	1	14	-	1.693	0.279	0.074	0.009	0.1	-	0.22	0.1	0.193
SCV	1	15	-	1.918	0.313	0.065	0.009	0.1	-	0.22	0.12	0.171
SCV	1	16	-	2.098	0.34	0.062	0.011	0.1	-	0.225	0.12	0.165
SCV	1	17	-	2.197	0.355	0.065	0.019	0.1	-	0.235	0.15	0.172
SCV	1	18	-	2.239	0.361	0.078	0.034	0.1	-	0.255	0.23	0.182
SCV	1	19	-	2.249	0.362	0.09	0.03	0.1	-	0.27	0.25	0.191
SCV	1	20	-	1.994	0.324	0.09	0.017	0.1	-	0.28	0.25	0.198
SCV	1	21	-	1.633	0.27	0.089	0.011	0.1	-	0.315	0.23	0.203
SCV	1	22	-	1.224	0.209	0.09	0.008	0.1	-	0.355	0.2	0.206
SCV	1	23	-	0.871	0.156	0.083	0.005	0.1	-	0.325	0.15	0.168
SCV	1	24	-	0.6	0.115	0.056	0.003	0.1	-	0.245	0.1	0.098
SCI	1	1	-	-	0.025	0.032	0.002	0.1	-	0.19	0.05	0.044
SCI	1	2	-	-	0.025	0.024	0.002	0.1	-	0.17	0.05	0.019
SCI	1	3	-	-	0.025	0.02	0.001	0.1	-	0.16	0.05	0.011
SCI	1	4	-	-	0.025	0.018	0.001	0.1	-	0.16	0.05	0.009
SCI	1	5	-	-	0.025	0.023	0.002	0.1	-	0.16	0.05	0.01
SCI	1	6	-	-	0.025	0.039	0.002	0.1	-	0.175	0.05	0.028
SCI	1	7	-	-	0.025	0.077	0.005	0.1	-	0.205	0.05	0.075
SCI	1	8	-	-	0.025	0.114	0.008	0.1	-	0.225	0.1	0.133
SCI	1	9	-	-	0.025	0.116	0.009	0.1	-	0.225	0.1	0.168
SCI	1	10	-	0.23	0.06	0.114	0.008	0.1	-	0.225	0.1	0.21
SCI	1	11	-	0.388	0.083	0.107	0.008	0.1	-	0.225	0.1	0.231
SCI	1	12	-	0.577	0.112	0.092	0.011	0.1	-	0.225	0.1	0.228
SCI	1	13	-	0.847	0.152	0.081	0.011	0.1	-	0.225	0.1	0.207
SCI	1	14	-	1.149	0.197	0.074	0.009	0.1	-	0.22	0.1	0.193
SCI	1	15	-	1.361	0.229	0.065	0.009	0.1	-	0.22	0.12	0.171
SCI	1	16	-	1.531	0.255	0.062	0.011	0.1	-	0.225	0.12	0.165
SCI	1	17	-	1.624	0.269	0.065	0.019	0.1	-	0.235	0.15	0.172
SCI	1	18	-	1.665	0.275	0.078	0.034	0.1	-	0.255	0.23	0.182
SCI	1	19	-	1.674	0.276	0.09	0.03	0.1	-	0.27	0.25	0.191
SCI	1	20	-	1.439	0.241	0.09	0.017	0.1	-	0.28	0.25	0.198
SCI	1	21	-	1.102	0.19	0.089	0.011	0.1	-	0.315	0.23	0.203
SCI	1	22	-	0.721	0.133	0.09	0.008	0.1	-	0.355	0.2	0.206
SCI	1	23	-	0.393	0.084	0.083	0.005	0.1	-	0.325	0.15	0.168
SCI	1	24	-	0.14	0.046	0.056	0.003	0.1	-	0.245	0.1	0.098
DSW	1	1	-	1.13	0.195	0.032	0.002	0.1	-	0.19	0.05	0.044
DSW	1	2	-	1.003	0.175	0.024	0.002	0.1	-	0.17	0.05	0.019
DSW	1	3	-	0.859	0.154	0.02	0.001	0.1	-	0.16	0.05	0.011
DSW	1	4	-	0.746	0.137	0.018	0.001	0.1	-	0.16	0.05	0.009
DSW	1	5	-	0.624	0.119	0.023	0.002	0.1	-	0.16	0.05	0.01
DSW	1	6	-	0.533	0.105	0.039	0.002	0.1	-	0.175	0.05	0.028
DSW	1	7	-	0.532	0.105	0.077	0.005	0.1	-	0.205	0.05	0.075
DSW	1	8	-	0.806	0.146	0.114	0.008	0.1	-	0.225	0.1	0.133
DSW	1	9	-	1.155	0.198	0.116	0.009	0.1	-	0.225	0.1	0.168
DSW	1	10	-	1.467	0.245	0.114	0.008	0.1	-	0.225	0.1	0.21

Climate	Day	Hour	Heating	Cooling	Vent	WaterHeat	Cooking	Refrig	ExtLight	IntLight	Electronics	Appliances
DSW	1	11	-	1.658	0.274	0.107	0.008	0.1	-	0.225	0.1	0.231
DSW	1	12	-	1.894	0.309	0.092	0.011	0.1	-	0.225	0.1	0.228
DSW	1	13	-	2.229	0.359	0.081	0.011	0.1	-	0.225	0.1	0.207
DSW	1	14	-	2.598	0.415	0.074	0.009	0.1	-	0.22	0.1	0.193
DSW	1	15	-	2.851	0.453	0.065	0.009	0.1	-	0.22	0.12	0.171
DSW	1	16	-	3.056	0.483	0.062	0.011	0.1	-	0.225	0.12	0.165
DSW	1	17	-	3.167	0.5	0.065	0.019	0.1	-	0.235	0.15	0.172
DSW	1	18	-	3.214	0.507	0.078	0.034	0.1	-	0.255	0.23	0.182
DSW	1	19	-	3.225	0.509	0.09	0.03	0.1	-	0.27	0.25	0.191
DSW	1	20	-	2.93	0.465	0.09	0.017	0.1	-	0.28	0.25	0.198
DSW	1	21	-	2.516	0.402	0.089	0.011	0.1	-	0.315	0.23	0.203
DSW	1	22	-	2.048	0.332	0.09	0.008	0.1	-	0.355	0.2	0.206
DSW	1	23	-	1.644	0.272	0.083	0.005	0.1	-	0.325	0.15	0.168
DSW	1	24	-	1.333	0.225	0.056	0.003	0.1	-	0.245	0.1	0.098
HID	1	1	-	-	0.025	0.032	0.002	0.1	-	0.19	0.05	0.044
HID	1	2	-	-	0.025	0.024	0.002	0.1	-	0.17	0.05	0.019
HID	1	3	-	-	0.025	0.02	0.001	0.1	-	0.16	0.05	0.011
HID	1	4	-	-	0.025	0.018	0.001	0.1	-	0.16	0.05	0.009
HID	1	5	-	-	0.025	0.023	0.002	0.1	-	0.16	0.05	0.01
HID	1	6	-	-	0.025	0.039	0.002	0.1	-	0.175	0.05	0.028
HID	1	7	-	-	0.025	0.077	0.005	0.1	-	0.205	0.05	0.075
HID	1	8	-	-	0.025	0.114	0.008	0.1	-	0.225	0.1	0.133
HID	1	9	-	-	0.025	0.116	0.009	0.1	-	0.225	0.1	0.168
HID	1	10	-	0.215	0.057	0.114	0.008	0.1	-	0.225	0.1	0.21
HID	1	11	-	0.362	0.079	0.107	0.008	0.1	-	0.225	0.1	0.231
HID	1	12	-	0.539	0.106	0.092	0.011	0.1	-	0.225	0.1	0.228
HID	1	13	-	0.79	0.144	0.081	0.011	0.1	-	0.225	0.1	0.207
HID	1	14	-	1.072	0.186	0.074	0.009	0.1	-	0.22	0.1	0.193
HID	1	15	-	1.27	0.216	0.065	0.009	0.1	-	0.22	0.12	0.171
HID	1	16	-	1.429	0.239	0.062	0.011	0.1	-	0.225	0.12	0.165
HID	1	17	-	1.516	0.252	0.065	0.019	0.1	-	0.235	0.15	0.172
HID	1	18	-	1.554	0.258	0.078	0.034	0.1	-	0.255	0.23	0.182
HID	1	19	-	1.563	0.259	0.09	0.03	0.1	-	0.27	0.25	0.191
HID	1	20	-	1.343	0.226	0.09	0.017	0.1	-	0.28	0.25	0.198
HID	1	21	-	1.028	0.179	0.089	0.011	0.1	-	0.315	0.23	0.203
HID	1	22	-	0.673	0.126	0.09	0.008	0.1	-	0.355	0.2	0.206
HID	1	23	-	0.366	0.08	0.083	0.005	0.1	-	0.325	0.15	0.168
HID	1	24	-	0.131	0.045	0.056	0.003	0.1	-	0.245	0.1	0.098
NWC	2	1	-	-	0.025	0.118	0.007	0.1	-	0.19	0.05	0.044
NWC	2	2	-	-	0.025	0.09	0.006	0.1	-	0.17	0.05	0.019
NWC	2	3	-	-	0.025	0.073	0.005	0.1	-	0.16	0.05	0.011
NWC	2	4	-	-	0.025	0.068	0.005	0.1	-	0.16	0.05	0.009
NWC	2	5	-	-	0.025	0.084	0.006	0.1	-	0.16	0.05	0.01
NWC	2	6	-	-	0.025	0.146	0.009	0.1	-	0.175	0.05	0.028
NWC	2	7	-	-	0.025	0.287	0.019	0.1	-	0.205	0.05	0.075
NWC	2	8	-	-	0.025	0.428	0.03	0.1	-	0.225	0.1	0.133
NWC	2	9	-	-	0.025	0.433	0.033	0.1	-	0.225	0.1	0.168
NWC	2	10	-	0.061	0.034	0.428	0.032	0.1	-	0.225	0.1	0.21
NWC	2	11	-	0.104	0.041	0.399	0.032	0.1	-	0.225	0.1	0.231
NWC	2	12	-	0.154	0.048	0.343	0.04	0.1	-	0.225	0.1	0.228
NWC	2	13	-	0.226	0.059	0.304	0.043	0.1	-	0.225	0.1	0.207
NWC	2	14	-	0.306	0.071	0.276	0.035	0.1	-	0.22	0.1	0.193
NWC	2	15	-	0.363	0.079	0.242	0.033	0.1	-	0.22	0.12	0.171
NWC	2	16	-	0.408	0.086	0.231	0.04	0.1	-	0.225	0.12	0.165
NWC	2	17	-	0.433	0.09	0.242	0.071	0.1	-	0.235	0.15	0.172
NWC	2	18	-	0.444	0.092	0.293	0.126	0.1	-	0.255	0.23	0.182
NWC	2	19	-	0.447	0.092	0.338	0.111	0.1	-	0.27	0.25	0.191
NWC	2	20	-	0.384	0.083	0.338	0.065	0.1	-	0.28	0.25	0.198
NWC	2	21	-	0.294	0.069	0.332	0.04	0.1	-	0.315	0.23	0.203
NWC	2	22	-	0.192	0.054	0.338	0.029	0.1	-	0.355	0.2	0.206
NWC	2	23	-	0.105	0.041	0.309	0.017	0.1	-	0.325	0.15	0.168
NWC	2	24	-	0.037	0.031	0.208	0.01	0.1	-	0.245	0.1	0.098
NWV	2	1	-	0.334	0.075	0.095	0.005	0.1	-	0.19	0.05	0.044
NWV	2	2	-	0.259	0.064	0.072	0.005	0.1	-	0.17	0.05	0.019
NWV	2	3	-	0.176	0.051	0.059	0.004	0.1	-	0.16	0.05	0.011
NWV	2	4	-	0.11	0.042	0.054	0.004	0.1	-	0.16	0.05	0.009
NWV	2	5	-	0.04	0.031	0.068	0.005	0.1	-	0.16	0.05	0.01
NWV	2	6	-	-	0.025	0.117	0.007	0.1	-	0.175	0.05	0.028
NWV	2	7	-	-	0.025	0.23	0.015	0.1	-	0.205	0.05	0.075
NWV	2	8	-	0.139	0.046	0.342	0.024	0.1	-	0.225	0.1	0.133
NWV	2	9	-	0.343	0.076	0.347	0.026	0.1	-	0.225	0.1	0.168
NWV	2	10	-	0.526	0.104	0.342	0.025	0.1	-	0.225	0.1	0.21
NWV	2	11	-	0.639	0.121	0.32	0.025	0.1	-	0.225	0.1	0.231
NWV	2	12	-	0.777	0.142	0.275	0.032	0.1	-	0.225	0.1	0.228
NWV	2	13	-	0.973	0.171	0.243	0.034	0.1	-	0.225	0.1	0.207
NWV	2	14	-	1.191	0.204	0.221	0.028	0.1	-	0.22	0.1	0.193
NWV	2	15	-	1.343	0.226	0.194	0.026	0.1	-	0.22	0.12	0.171
NWV	2	16	-	1.429	0.239	0.185	0.032	0.1	-	0.225	0.12	0.165
NWV	2	17	-	1.434	0.24	0.194	0.056	0.1	-	0.235	0.15	0.172
NWV	2	18	-	1.436	0.24	0.234	0.101	0.1	-	0.255	0.23	0.182
NWV	2	19	-	1.436	0.24	0.27	0.089	0.1	-	0.27	0.25	0.191
NWV	2	20	-	1.394	0.234	0.27	0.052	0.1	-	0.28	0.25	0.198
NWV	2	21	-	1.15	0.197	0.266	0.032	0.1	-	0.315	0.23	0.203
NWV	2	22	-	0.874	0.156	0.27	0.023	0.1	-	0.355	0.2	0.206
NWV	2	23	-	0.636	0.12	0.248	0.014	0.1	-	0.325	0.15	0.168
NWV	2	24	-	0.454	0.093	0.167	0.008	0.1	-	0.245	0.1	0.098
NWI	2	1	-	0.593	0.114	0.118	0.007	0.1	-	0.19	0.05	0.044
NWI	2	2	-	0.501	0.1	0.09	0.006	0.1	-	0.17	0.05	0.019
NWI	2	3	-	0.396	0.084	0.073	0.005	0.1	-	0.16	0.05	0.011
NWI	2	4	-	0.314	0.072	0.068	0.005	0.1	-	0.16	0.05	0.009
NWI	2	5	-	0.226	0.059	0.084	0.006	0.1	-	0.16	0.05	0.01
NWI	2	6	-	0.16	0.049	0.146	0.009	0.1	-	0.175	0.05	0.028
NWI	2	7	-	0.158	0.049	0.287	0.019	0.1	-	0.205	0.05	0.075
NWI	2	8	-	0.354	0.078	0.428	0.03	0.1	-	0.225	0.1	0.133
NWI	2	9	-	0.607	0.116	0.433	0.033	0.1	-	0.225	0.1	0.168

Climate	Day	Hour	Heating	Cooling	Vent	WaterHeat	Cooking	Refrig	ExtLight	IntLight	Electronics	Appliances
NWI	2	10	-	0.835	0.15	0.428	0.032	0.1	-	0.225	0.1	0.21
NWI	2	11	-	0.975	0.171	0.399	0.032	0.1	-	0.225	0.1	0.231
NWI	2	12	-	1.147	0.197	0.343	0.04	0.1	-	0.225	0.1	0.228
NWI	2	13	-	1.391	0.234	0.304	0.043	0.1	-	0.225	0.1	0.207
NWI	2	14	-	1.66	0.274	0.276	0.035	0.1	-	0.22	0.1	0.193
NWI	2	15	-	1.728	0.284	0.242	0.033	0.1	-	0.22	0.12	0.171
NWI	2	16	-	1.745	0.287	0.231	0.04	0.1	-	0.225	0.12	0.165
NWI	2	17	-	1.751	0.288	0.242	0.071	0.1	-	0.235	0.15	0.172
NWI	2	18	-	1.753	0.288	0.293	0.126	0.1	-	0.255	0.23	0.182
NWI	2	19	-	1.753	0.288	0.338	0.111	0.1	-	0.27	0.25	0.191
NWI	2	20	-	1.712	0.282	0.338	0.065	0.1	-	0.28	0.25	0.198
NWI	2	21	-	1.605	0.266	0.332	0.04	0.1	-	0.315	0.23	0.203
NWI	2	22	-	1.263	0.215	0.338	0.029	0.1	-	0.355	0.2	0.206
NWI	2	23	-	0.968	0.17	0.309	0.017	0.1	-	0.325	0.15	0.168
NWI	2	24	-	0.741	0.136	0.208	0.01	0.1	-	0.245	0.1	0.098
RMN	2	1	-	-	0.025	0.032	0.002	0.1	-	0.19	0.05	0.044
RMN	2	2	-	-	0.025	0.024	0.002	0.1	-	0.17	0.05	0.019
RMN	2	3	-	-	0.025	0.02	0.001	0.1	-	0.16	0.05	0.011
RMN	2	4	-	-	0.025	0.018	0.001	0.1	-	0.16	0.05	0.009
RMN	2	5	-	-	0.025	0.023	0.002	0.1	-	0.16	0.05	0.01
RMN	2	6	-	-	0.025	0.039	0.002	0.1	-	0.175	0.05	0.028
RMN	2	7	-	-	0.025	0.077	0.005	0.1	-	0.205	0.05	0.075
RMN	2	8	-	-	0.025	0.114	0.008	0.1	-	0.225	0.1	0.133
RMN	2	9	-	-	0.025	0.116	0.009	0.1	-	0.225	0.1	0.168
RMN	2	10	-	-	0.025	0.114	0.008	0.1	-	0.225	0.1	0.21
RMN	2	11	-	0.002	0.025	0.107	0.008	0.1	-	0.225	0.1	0.231
RMN	2	12	-	0.04	0.031	0.092	0.011	0.1	-	0.225	0.1	0.228
RMN	2	13	-	0.094	0.039	0.081	0.011	0.1	-	0.225	0.1	0.207
RMN	2	14	-	0.154	0.048	0.074	0.009	0.1	-	0.22	0.1	0.193
RMN	2	15	-	0.197	0.055	0.065	0.009	0.1	-	0.22	0.12	0.171
RMN	2	16	-	0.232	0.06	0.062	0.011	0.1	-	0.225	0.12	0.165
RMN	2	17	-	0.251	0.063	0.065	0.019	0.1	-	0.235	0.15	0.172
RMN	2	18	-	0.259	0.064	0.078	0.034	0.1	-	0.255	0.23	0.182
RMN	2	19	-	0.261	0.064	0.09	0.03	0.1	-	0.27	0.25	0.191
RMN	2	20	-	0.214	0.057	0.09	0.017	0.1	-	0.28	0.25	0.198
RMN	2	21	-	0.147	0.047	0.089	0.011	0.1	-	0.315	0.23	0.203
RMN	2	22	-	0.07	0.036	0.09	0.008	0.1	-	0.355	0.2	0.206
RMN	2	23	-	0.005	0.026	0.083	0.005	0.1	-	0.325	0.15	0.168
RMN	2	24	-	-	0.025	0.056	0.003	0.1	-	0.245	0.1	0.098
NCC	2	1	-	-	0.025	0.032	0.002	0.1	-	0.19	0.05	0.044
NCC	2	2	-	-	0.025	0.024	0.002	0.1	-	0.17	0.05	0.019
NCC	2	3	-	-	0.025	0.02	0.001	0.1	-	0.16	0.05	0.011
NCC	2	4	-	-	0.025	0.018	0.001	0.1	-	0.16	0.05	0.009
NCC	2	5	-	-	0.025	0.023	0.002	0.1	-	0.16	0.05	0.01
NCC	2	6	-	-	0.025	0.039	0.002	0.1	-	0.175	0.05	0.028
NCC	2	7	-	-	0.025	0.077	0.005	0.1	-	0.205	0.05	0.075
NCC	2	8	-	-	0.025	0.114	0.008	0.1	-	0.225	0.1	0.133
NCC	2	9	-	-	0.025	0.116	0.009	0.1	-	0.225	0.1	0.168
NCC	2	10	-	0.062	0.034	0.114	0.008	0.1	-	0.225	0.1	0.21
NCC	2	11	-	0.124	0.044	0.107	0.008	0.1	-	0.225	0.1	0.231
NCC	2	12	-	0.199	0.055	0.092	0.011	0.1	-	0.225	0.1	0.228
NCC	2	13	-	0.305	0.071	0.081	0.011	0.1	-	0.225	0.1	0.207
NCC	2	14	-	0.425	0.089	0.074	0.009	0.1	-	0.22	0.1	0.193
NCC	2	15	-	0.509	0.101	0.065	0.009	0.1	-	0.22	0.12	0.171
NCC	2	16	-	0.576	0.111	0.062	0.011	0.1	-	0.225	0.12	0.165
NCC	2	17	-	0.613	0.117	0.065	0.019	0.1	-	0.235	0.15	0.172
NCC	2	18	-	0.629	0.119	0.078	0.034	0.1	-	0.255	0.23	0.182
NCC	2	19	-	0.633	0.12	0.09	0.03	0.1	-	0.27	0.25	0.191
NCC	2	20	-	0.54	0.106	0.09	0.017	0.1	-	0.28	0.25	0.198
NCC	2	21	-	0.407	0.086	0.089	0.011	0.1	-	0.315	0.23	0.203
NCC	2	22	-	0.256	0.063	0.09	0.008	0.1	-	0.355	0.2	0.206
NCC	2	23	-	0.127	0.044	0.083	0.005	0.1	-	0.325	0.15	0.168
NCC	2	24	-	0.027	0.029	0.056	0.003	0.1	-	0.245	0.1	0.098
NCV	2	1	-	0.742	0.136	0.032	0.002	0.1	-	0.19	0.05	0.044
NCV	2	2	-	0.626	0.119	0.024	0.002	0.1	-	0.17	0.05	0.019
NCV	2	3	-	0.495	0.099	0.02	0.001	0.1	-	0.16	0.05	0.011
NCV	2	4	-	0.393	0.084	0.018	0.001	0.1	-	0.16	0.05	0.009
NCV	2	5	-	0.283	0.067	0.023	0.002	0.1	-	0.16	0.05	0.01
NCV	2	6	-	0.2	0.055	0.039	0.002	0.1	-	0.175	0.05	0.028
NCV	2	7	-	0.197	0.055	0.077	0.005	0.1	-	0.205	0.05	0.075
NCV	2	8	-	0.443	0.091	0.114	0.008	0.1	-	0.225	0.1	0.133
NCV	2	9	-	0.759	0.139	0.116	0.009	0.1	-	0.225	0.1	0.168
NCV	2	10	-	1.044	0.182	0.114	0.008	0.1	-	0.225	0.1	0.21
NCV	2	11	-	1.219	0.208	0.107	0.008	0.1	-	0.225	0.1	0.231
NCV	2	12	-	1.434	0.24	0.092	0.011	0.1	-	0.225	0.1	0.228
NCV	2	13	-	1.738	0.286	0.081	0.011	0.1	-	0.225	0.1	0.207
NCV	2	14	-	2.076	0.336	0.074	0.009	0.1	-	0.22	0.1	0.193
NCV	2	15	-	2.309	0.371	0.065	0.009	0.1	-	0.22	0.12	0.171
NCV	2	16	-	2.496	0.399	0.062	0.011	0.1	-	0.225	0.12	0.165
NCV	2	17	-	2.598	0.415	0.065	0.019	0.1	-	0.235	0.15	0.172
NCV	2	18	-	2.629	0.419	0.078	0.034	0.1	-	0.255	0.23	0.182
NCV	2	19	-	2.629	0.419	0.09	0.03	0.1	-	0.27	0.25	0.191
NCV	2	20	-	2.384	0.383	0.09	0.017	0.1	-	0.28	0.25	0.198
NCV	2	21	-	2.007	0.326	0.089	0.011	0.1	-	0.315	0.23	0.203
NCV	2	22	-	1.579	0.262	0.09	0.008	0.1	-	0.355	0.2	0.206
NCV	2	23	-	1.21	0.207	0.083	0.005	0.1	-	0.325	0.15	0.168
NCV	2	24	-	0.927	0.164	0.056	0.003	0.1	-	0.245	0.1	0.098
NCI	2	1	-	0.401	0.085	0.032	0.002	0.1	-	0.19	0.05	0.044
NCI	2	2	-	0.311	0.072	0.024	0.002	0.1	-	0.17	0.05	0.019
NCI	2	3	-	0.211	0.057	0.02	0.001	0.1	-	0.16	0.05	0.011
NCI	2	4	-	0.132	0.045	0.018	0.001	0.1	-	0.16	0.05	0.009
NCI	2	5	-	0.048	0.032	0.023	0.002	0.1	-	0.16	0.05	0.01
NCI	2	6	-	-	0.025	0.039	0.002	0.1	-	0.175	0.05	0.028
NCI	2	7	-	-	0.025	0.077	0.005	0.1	-	0.205	0.05	0.075
NCI	2	8	-	0.167	0.05	0.114	0.008	0.1	-	0.225	0.1	0.133

Climate	Day	Hour	Heating	Cooling	Vent	WaterHeat	Cooking	Refrig	ExtLight	IntLight	Electronics	Appliances
NCI	2	9	-	0.411	0.087	0.116	0.009	0.1	-	0.225	0.1	0.168
NCI	2	10	-	0.632	0.12	0.114	0.008	0.1	-	0.225	0.1	0.21
NCI	2	11	-	0.767	0.14	0.107	0.008	0.1	-	0.225	0.1	0.231
NCI	2	12	-	0.933	0.165	0.092	0.011	0.1	-	0.225	0.1	0.228
NCI	2	13	-	1.168	0.2	0.081	0.011	0.1	-	0.225	0.1	0.207
NCI	2	14	-	1.43	0.239	0.074	0.009	0.1	-	0.22	0.1	0.193
NCI	2	15	-	1.611	0.267	0.065	0.009	0.1	-	0.22	0.12	0.171
NCI	2	16	-	1.757	0.289	0.062	0.011	0.1	-	0.225	0.12	0.165
NCI	2	17	-	1.836	0.3	0.065	0.019	0.1	-	0.235	0.15	0.172
NCI	2	18	-	1.871	0.306	0.078	0.034	0.1	-	0.255	0.23	0.182
NCI	2	19	-	1.879	0.307	0.09	0.03	0.1	-	0.27	0.25	0.191
NCI	2	20	-	1.672	0.276	0.09	0.017	0.1	-	0.28	0.25	0.198
NCI	2	21	-	1.38	0.232	0.089	0.011	0.1	-	0.315	0.23	0.203
NCI	2	22	-	1.049	0.182	0.09	0.008	0.1	-	0.355	0.2	0.206
NCI	2	23	-	0.764	0.14	0.083	0.005	0.1	-	0.325	0.15	0.168
NCI	2	24	-	0.544	0.107	0.056	0.003	0.1	-	0.245	0.1	0.098
SCC	2	1	-	-	0.025	0.032	0.002	0.1	-	0.19	0.05	0.044
SCC	2	2	-	-	0.025	0.024	0.002	0.1	-	0.17	0.05	0.019
SCC	2	3	-	-	0.025	0.02	0.001	0.1	-	0.16	0.05	0.011
SCC	2	4	-	-	0.025	0.018	0.001	0.1	-	0.16	0.05	0.009
SCC	2	5	-	-	0.025	0.023	0.002	0.1	-	0.16	0.05	0.01
SCC	2	6	-	-	0.025	0.039	0.002	0.1	-	0.175	0.05	0.028
SCC	2	7	-	-	0.025	0.077	0.005	0.1	-	0.205	0.05	0.075
SCC	2	8	-	-	0.025	0.114	0.008	0.1	-	0.225	0.1	0.133
SCC	2	9	-	-	0.025	0.116	0.009	0.1	-	0.225	0.1	0.168
SCC	2	10	-	0.062	0.034	0.114	0.008	0.1	-	0.225	0.1	0.21
SCC	2	11	-	0.124	0.044	0.107	0.008	0.1	-	0.225	0.1	0.231
SCC	2	12	-	0.199	0.055	0.092	0.011	0.1	-	0.225	0.1	0.228
SCC	2	13	-	0.305	0.071	0.081	0.011	0.1	-	0.225	0.1	0.207
SCC	2	14	-	0.425	0.089	0.074	0.009	0.1	-	0.22	0.1	0.193
SCC	2	15	-	0.509	0.101	0.065	0.009	0.1	-	0.22	0.12	0.171
SCC	2	16	-	0.576	0.111	0.062	0.011	0.1	-	0.225	0.12	0.165
SCC	2	17	-	0.613	0.117	0.065	0.019	0.1	-	0.235	0.15	0.172
SCC	2	18	-	0.629	0.119	0.078	0.034	0.1	-	0.255	0.23	0.182
SCC	2	19	-	0.633	0.12	0.09	0.03	0.1	-	0.27	0.25	0.191
SCC	2	20	-	0.54	0.106	0.09	0.017	0.1	-	0.28	0.25	0.198
SCC	2	21	-	0.407	0.086	0.089	0.011	0.1	-	0.315	0.23	0.203
SCC	2	22	-	0.256	0.063	0.09	0.008	0.1	-	0.355	0.2	0.206
SCC	2	23	-	0.127	0.044	0.083	0.005	0.1	-	0.325	0.15	0.168
SCC	2	24	-	0.027	0.029	0.056	0.003	0.1	-	0.245	0.1	0.098
SCV	2	1	-	0.742	0.136	0.032	0.002	0.1	-	0.19	0.05	0.044
SCV	2	2	-	0.626	0.119	0.024	0.002	0.1	-	0.17	0.05	0.019
SCV	2	3	-	0.495	0.099	0.02	0.001	0.1	-	0.16	0.05	0.011
SCV	2	4	-	0.393	0.084	0.018	0.001	0.1	-	0.16	0.05	0.009
SCV	2	5	-	0.283	0.067	0.023	0.002	0.1	-	0.16	0.05	0.01
SCV	2	6	-	0.2	0.055	0.039	0.002	0.1	-	0.175	0.05	0.028
SCV	2	7	-	0.197	0.055	0.077	0.005	0.1	-	0.205	0.05	0.075
SCV	2	8	-	0.443	0.091	0.114	0.008	0.1	-	0.225	0.1	0.133
SCV	2	9	-	0.759	0.139	0.116	0.009	0.1	-	0.225	0.1	0.168
SCV	2	10	-	1.044	0.182	0.114	0.008	0.1	-	0.225	0.1	0.21
SCV	2	11	-	1.219	0.208	0.107	0.008	0.1	-	0.225	0.1	0.231
SCV	2	12	-	1.434	0.24	0.092	0.011	0.1	-	0.225	0.1	0.228
SCV	2	13	-	1.738	0.286	0.081	0.011	0.1	-	0.225	0.1	0.207
SCV	2	14	-	2.076	0.336	0.074	0.009	0.1	-	0.22	0.1	0.193
SCV	2	15	-	2.309	0.371	0.065	0.009	0.1	-	0.22	0.12	0.171
SCV	2	16	-	2.496	0.399	0.062	0.011	0.1	-	0.225	0.12	0.165
SCV	2	17	-	2.598	0.415	0.065	0.019	0.1	-	0.235	0.15	0.172
SCV	2	18	-	2.629	0.419	0.078	0.034	0.1	-	0.255	0.23	0.182
SCV	2	19	-	2.629	0.419	0.09	0.03	0.1	-	0.27	0.25	0.191
SCV	2	20	-	2.384	0.383	0.09	0.017	0.1	-	0.28	0.25	0.198
SCV	2	21	-	2.007	0.326	0.089	0.011	0.1	-	0.315	0.23	0.203
SCV	2	22	-	1.579	0.262	0.09	0.008	0.1	-	0.355	0.2	0.206
SCV	2	23	-	1.21	0.207	0.083	0.005	0.1	-	0.325	0.15	0.168
SCV	2	24	-	0.927	0.164	0.056	0.003	0.1	-	0.245	0.1	0.098
SCI	2	1	-	0.27	0.065	0.032	0.002	0.1	-	0.19	0.05	0.044
SCI	2	2	-	0.161	0.049	0.024	0.002	0.1	-	0.17	0.05	0.019
SCI	2	3	-	0.042	0.031	0.02	0.001	0.1	-	0.16	0.05	0.011
SCI	2	4	-	-	0.025	0.018	0.001	0.1	-	0.16	0.05	0.009
SCI	2	5	-	-	0.025	0.023	0.002	0.1	-	0.16	0.05	0.01
SCI	2	6	-	-	0.025	0.039	0.002	0.1	-	0.175	0.05	0.028
SCI	2	7	-	-	0.025	0.077	0.005	0.1	-	0.205	0.05	0.075
SCI	2	8	-	-	0.025	0.114	0.008	0.1	-	0.225	0.1	0.133
SCI	2	9	-	0.278	0.067	0.116	0.009	0.1	-	0.225	0.1	0.168
SCI	2	10	-	0.544	0.107	0.114	0.008	0.1	-	0.225	0.1	0.21
SCI	2	11	-	0.708	0.131	0.107	0.008	0.1	-	0.225	0.1	0.231
SCI	2	12	-	0.908	0.161	0.092	0.011	0.1	-	0.225	0.1	0.228
SCI	2	13	-	1.191	0.204	0.081	0.011	0.1	-	0.225	0.1	0.207
SCI	2	14	-	1.508	0.251	0.074	0.009	0.1	-	0.22	0.1	0.193
SCI	2	15	-	1.728	0.284	0.065	0.009	0.1	-	0.22	0.12	0.171
SCI	2	16	-	1.905	0.311	0.062	0.011	0.1	-	0.225	0.12	0.165
SCI	2	17	-	2.002	0.325	0.065	0.019	0.1	-	0.235	0.15	0.172
SCI	2	18	-	2.044	0.332	0.078	0.034	0.1	-	0.255	0.23	0.182
SCI	2	19	-	2.054	0.333	0.09	0.03	0.1	-	0.27	0.25	0.191
SCI	2	20	-	1.805	0.296	0.09	0.017	0.1	-	0.28	0.25	0.198
SCI	2	21	-	1.452	0.243	0.089	0.011	0.1	-	0.315	0.23	0.203
SCI	2	22	-	1.052	0.183	0.09	0.008	0.1	-	0.355	0.2	0.206
SCI	2	23	-	0.708	0.131	0.083	0.005	0.1	-	0.325	0.15	0.168
SCI	2	24	-	0.443	0.091	0.056	0.003	0.1	-	0.245	0.1	0.098
DSW	2	1	-	1.689	0.278	0.032	0.002	0.1	-	0.19	0.05	0.044
DSW	2	2	-	1.554	0.258	0.024	0.002	0.1	-	0.17	0.05	0.019
DSW	2	3	-	1.398	0.235	0.02	0.001	0.1	-	0.16	0.05	0.011
DSW	2	4	-	1.278	0.217	0.018	0.001	0.1	-	0.16	0.05	0.009
DSW	2	5	-	1.147	0.197	0.023	0.002	0.1	-	0.16	0.05	0.01
DSW	2	6	-	1.049	0.182	0.039	0.002	0.1	-	0.175	0.05	0.028
DSW	2	7	-	1.05	0.182	0.077	0.005	0.1	-	0.205	0.05	0.075

Climate	Day	Hour	Heating	Cooling	Vent	WaterHeat	Cooking	Refrig	ExtLight	IntLight	Electronics	Appliances
DSW	2	8	-	1.35	0.228	0.114	0.008	0.1	-	0.225	0.1	0.133
DSW	2	9	-	1.723	0.284	0.116	0.009	0.1	-	0.225	0.1	0.168
DSW	2	10	-	2.055	0.333	0.114	0.008	0.1	-	0.225	0.1	0.21
DSW	2	11	-	2.257	0.364	0.107	0.008	0.1	-	0.225	0.1	0.231
DSW	2	12	-	2.509	0.401	0.092	0.011	0.1	-	0.225	0.1	0.228
DSW	2	13	-	2.866	0.455	0.081	0.011	0.1	-	0.225	0.1	0.207
DSW	2	14	-	3.257	0.514	0.074	0.009	0.1	-	0.22	0.1	0.193
DSW	2	15	-	3.524	0.554	0.065	0.009	0.1	-	0.22	0.12	0.171
DSW	2	16	-	3.74	0.586	0.062	0.011	0.1	-	0.225	0.12	0.165
DSW	2	17	-	3.856	0.603	0.065	0.019	0.1	-	0.235	0.15	0.172
DSW	2	18	-	3.891	0.609	0.078	0.034	0.1	-	0.255	0.23	0.182
DSW	2	19	-	3.891	0.609	0.09	0.03	0.1	-	0.27	0.25	0.191
DSW	2	20	-	3.601	0.565	0.09	0.017	0.1	-	0.28	0.25	0.198
DSW	2	21	-	3.162	0.499	0.089	0.011	0.1	-	0.315	0.23	0.203
DSW	2	22	-	2.664	0.425	0.09	0.008	0.1	-	0.355	0.2	0.206
DSW	2	23	-	2.235	0.36	0.083	0.005	0.1	-	0.325	0.15	0.168
DSW	2	24	-	1.904	0.311	0.056	0.003	0.1	-	0.245	0.1	0.098
HID	2	1	-	0.692	0.129	0.032	0.002	0.1	-	0.19	0.05	0.044
HID	2	2	-	0.584	0.113	0.024	0.002	0.1	-	0.17	0.05	0.019
HID	2	3	-	0.462	0.094	0.02	0.001	0.1	-	0.16	0.05	0.011
HID	2	4	-	0.367	0.08	0.018	0.001	0.1	-	0.16	0.05	0.009
HID	2	5	-	0.264	0.065	0.023	0.002	0.1	-	0.16	0.05	0.01
HID	2	6	-	0.186	0.053	0.039	0.002	0.1	-	0.175	0.05	0.028
HID	2	7	-	0.184	0.053	0.077	0.005	0.1	-	0.205	0.05	0.075
HID	2	8	-	0.413	0.087	0.114	0.008	0.1	-	0.225	0.1	0.133
HID	2	9	-	0.709	0.131	0.116	0.009	0.1	-	0.225	0.1	0.168
HID	2	10	-	0.974	0.171	0.114	0.008	0.1	-	0.225	0.1	0.21
HID	2	11	-	1.137	0.196	0.107	0.008	0.1	-	0.225	0.1	0.231
HID	2	12	-	1.338	0.226	0.092	0.011	0.1	-	0.225	0.1	0.228
HID	2	13	-	1.622	0.268	0.081	0.011	0.1	-	0.225	0.1	0.207
HID	2	14	-	1.937	0.316	0.074	0.009	0.1	-	0.22	0.1	0.193
HID	2	15	-	2.155	0.348	0.065	0.009	0.1	-	0.22	0.12	0.171
HID	2	16	-	2.33	0.374	0.062	0.011	0.1	-	0.225	0.12	0.165
HID	2	17	-	2.425	0.389	0.065	0.019	0.1	-	0.235	0.15	0.172
HID	2	18	-	2.454	0.393	0.078	0.034	0.1	-	0.255	0.23	0.182
HID	2	19	-	2.454	0.393	0.09	0.03	0.1	-	0.27	0.25	0.191
HID	2	20	-	2.225	0.359	0.09	0.017	0.1	-	0.28	0.25	0.198
HID	2	21	-	1.873	0.306	0.089	0.011	0.1	-	0.315	0.23	0.203
HID	2	22	-	1.474	0.246	0.09	0.008	0.1	-	0.355	0.2	0.206
HID	2	23	-	1.13	0.194	0.083	0.005	0.1	-	0.325	0.15	0.168
HID	2	24	-	0.865	0.155	0.056	0.003	0.1	-	0.245	0.1	0.098
NWC	3	1	0.362	-	0.134	0.118	0.007	0.1	-	0.19	0.05	0.044
NWC	3	2	0.413	-	0.149	0.09	0.006	0.1	-	0.17	0.05	0.019
NWC	3	3	0.47	-	0.166	0.073	0.005	0.1	-	0.16	0.05	0.011
NWC	3	4	0.516	-	0.18	0.068	0.005	0.1	-	0.16	0.05	0.009
NWC	3	5	0.566	-	0.195	0.084	0.006	0.1	-	0.16	0.05	0.01
NWC	3	6	0.605	-	0.207	0.146	0.009	0.1	-	0.175	0.05	0.028
NWC	3	7	0.607	-	0.207	0.287	0.019	0.1	-	0.205	0.05	0.075
NWC	3	8	0.497	-	0.174	0.428	0.03	0.1	-	0.225	0.1	0.133
NWC	3	9	0.361	-	0.133	0.433	0.033	0.1	-	0.225	0.1	0.168
NWC	3	10	0.242	-	0.098	0.428	0.032	0.1	-	0.225	0.1	0.21
NWC	3	11	0.17	-	0.076	0.399	0.032	0.1	-	0.225	0.1	0.231
NWC	3	12	0.087	-	0.051	0.343	0.04	0.1	-	0.225	0.1	0.228
NWC	3	13	-	-	0.025	0.304	0.043	0.1	-	0.225	0.1	0.207
NWC	3	14	-	-	0.025	0.276	0.035	0.1	-	0.22	0.1	0.193
NWC	3	15	-	-	0.025	0.242	0.033	0.1	-	0.22	0.12	0.171
NWC	3	16	-	-	0.025	0.231	0.04	0.1	-	0.225	0.12	0.165
NWC	3	17	-	-	0.025	0.242	0.071	0.1	-	0.235	0.15	0.172
NWC	3	18	-	-	0.025	0.293	0.126	0.1	-	0.255	0.23	0.182
NWC	3	19	-	-	0.025	0.338	0.111	0.1	-	0.27	0.25	0.191
NWC	3	20	-	-	0.025	0.338	0.065	0.1	-	0.28	0.25	0.198
NWC	3	21	-	-	0.025	0.332	0.04	0.1	-	0.315	0.23	0.203
NWC	3	22	0.018	-	0.03	0.338	0.029	0.1	-	0.355	0.2	0.206
NWC	3	23	0.165	-	0.074	0.309	0.017	0.1	-	0.325	0.15	0.168
NWC	3	24	0.282	-	0.11	0.208	0.01	0.1	-	0.245	0.1	0.098
NWV	3	1	0.117	-	0.06	0.095	0.005	0.1	-	0.19	0.05	0.044
NWV	3	2	0.168	-	0.075	0.072	0.005	0.1	-	0.17	0.05	0.019
NWV	3	3	0.225	-	0.092	0.059	0.004	0.1	-	0.16	0.05	0.011
NWV	3	4	0.271	-	0.106	0.054	0.004	0.1	-	0.16	0.05	0.009
NWV	3	5	0.321	-	0.121	0.068	0.005	0.1	-	0.16	0.05	0.01
NWV	3	6	0.36	-	0.133	0.117	0.007	0.1	-	0.175	0.05	0.028
NWV	3	7	0.362	-	0.133	0.23	0.015	0.1	-	0.205	0.05	0.075
NWV	3	8	0.252	-	0.101	0.342	0.024	0.1	-	0.225	0.1	0.133
NWV	3	9	0.116	-	0.06	0.347	0.026	0.1	-	0.225	0.1	0.168
NWV	3	10	-	-	0.025	0.342	0.025	0.1	-	0.225	0.1	0.21
NWV	3	11	-	-	0.025	0.32	0.025	0.1	-	0.225	0.1	0.231
NWV	3	12	-	-	0.025	0.275	0.032	0.1	-	0.225	0.1	0.228
NWV	3	13	-	-	0.025	0.243	0.034	0.1	-	0.225	0.1	0.207
NWV	3	14	-	0.025	0.029	0.221	0.028	0.1	-	0.22	0.1	0.193
NWV	3	15	-	0.074	0.036	0.194	0.026	0.1	-	0.22	0.12	0.171
NWV	3	16	-	0.113	0.042	0.185	0.032	0.1	-	0.225	0.12	0.165
NWV	3	17	-	0.135	0.045	0.194	0.056	0.1	-	0.235	0.15	0.172
NWV	3	18	-	0.145	0.047	0.234	0.101	0.1	-	0.255	0.23	0.182
NWV	3	19	-	0.147	0.047	0.27	0.089	0.1	-	0.27	0.25	0.191
NWV	3	20	-	0.096	0.039	0.27	0.052	0.1	-	0.28	0.25	0.198
NWV	3	21	-	0.02	0.028	0.266	0.032	0.1	-	0.315	0.23	0.203
NWV	3	22	-	-	0.025	0.27	0.023	0.1	-	0.355	0.2	0.206
NWV	3	23	-	-	0.025	0.248	0.014	0.1	-	0.325	0.15	0.168
NWV	3	24	0.037	-	0.036	0.167	0.008	0.1	-	0.245	0.1	0.098
NWI	3	1	0.014	-	0.029	0.118	0.007	0.1	-	0.19	0.05	0.044
NWI	3	2	0.072	-	0.047	0.09	0.006	0.1	-	0.17	0.05	0.019
NWI	3	3	0.137	-	0.066	0.073	0.005	0.1	-	0.16	0.05	0.011
NWI	3	4	0.19	-	0.082	0.068	0.005	0.1	-	0.16	0.05	0.009
NWI	3	5	0.247	-	0.099	0.084	0.006	0.1	-	0.16	0.05	0.01
NWI	3	6	0.291	-	0.112	0.146	0.009	0.1	-	0.175	0.05	0.028

Climate	Day	Hour	Heating	Cooling	Vent	WaterHeat	Cooking	Refrig	ExtLight	IntLight	Electronics	Appliances
NWI	3	7	0.293	-	0.113	0.287	0.019	0.1	-	0.205	0.05	0.075
NWI	3	8	0.168	-	0.076	0.428	0.03	0.1	-	0.225	0.1	0.133
NWI	3	9	0.012	-	0.029	0.433	0.033	0.1	-	0.225	0.1	0.168
NWI	3	10	-	-	0.025	0.428	0.032	0.1	-	0.225	0.1	0.21
NWI	3	11	-	-	0.025	0.399	0.032	0.1	-	0.225	0.1	0.231
NWI	3	12	-	-	0.025	0.343	0.04	0.1	-	0.225	0.1	0.228
NWI	3	13	-	0.022	0.028	0.304	0.043	0.1	-	0.225	0.1	0.207
NWI	3	14	-	0.129	0.044	0.276	0.035	0.1	-	0.22	0.1	0.193
NWI	3	15	-	0.205	0.056	0.242	0.033	0.1	-	0.22	0.12	0.171
NWI	3	16	-	0.266	0.065	0.231	0.04	0.1	-	0.225	0.12	0.165
NWI	3	17	-	0.3	0.07	0.242	0.071	0.1	-	0.235	0.15	0.172
NWI	3	18	-	0.315	0.072	0.293	0.126	0.1	-	0.255	0.23	0.182
NWI	3	19	-	0.319	0.073	0.338	0.111	0.1	-	0.27	0.25	0.191
NWI	3	20	-	0.237	0.061	0.338	0.065	0.1	-	0.28	0.25	0.198
NWI	3	21	-	0.119	0.043	0.332	0.04	0.1	-	0.315	0.23	0.203
NWI	3	22	-	-	0.025	0.338	0.029	0.1	-	0.355	0.2	0.206
NWI	3	23	-	-	0.025	0.309	0.017	0.1	-	0.325	0.15	0.168
NWI	3	24	-	-	0.025	0.208	0.01	0.1	-	0.245	0.1	0.098
RMN	3	1	0.207	-	0.149	0.032	0.002	0.1	-	0.19	0.05	0.044
RMN	3	2	0.236	-	0.167	0.024	0.002	0.1	-	0.17	0.05	0.019
RMN	3	3	0.269	-	0.186	0.02	0.001	0.1	-	0.16	0.05	0.011
RMN	3	4	0.295	-	0.202	0.018	0.001	0.1	-	0.16	0.05	0.009
RMN	3	5	0.324	-	0.219	0.023	0.002	0.1	-	0.16	0.05	0.01
RMN	3	6	0.346	-	0.232	0.039	0.002	0.1	-	0.175	0.05	0.028
RMN	3	7	0.347	-	0.233	0.077	0.005	0.1	-	0.205	0.05	0.075
RMN	3	8	0.284	-	0.196	0.114	0.008	0.1	-	0.225	0.1	0.133
RMN	3	9	0.206	-	0.149	0.116	0.009	0.1	-	0.225	0.1	0.168
RMN	3	10	0.138	-	0.108	0.114	0.008	0.1	-	0.225	0.1	0.21
RMN	3	11	0.097	-	0.083	0.107	0.008	0.1	-	0.225	0.1	0.231
RMN	3	12	0.05	-	0.055	0.092	0.011	0.1	-	0.225	0.1	0.228
RMN	3	13	-	-	0.025	0.081	0.011	0.1	-	0.225	0.1	0.207
RMN	3	14	-	-	0.025	0.074	0.009	0.1	-	0.22	0.1	0.193
RMN	3	15	-	-	0.025	0.065	0.009	0.1	-	0.22	0.12	0.171
RMN	3	16	-	-	0.025	0.062	0.011	0.1	-	0.225	0.12	0.165
RMN	3	17	-	-	0.025	0.065	0.019	0.1	-	0.235	0.15	0.172
RMN	3	18	-	-	0.025	0.078	0.034	0.1	-	0.255	0.23	0.182
RMN	3	19	-	-	0.025	0.09	0.03	0.1	-	0.27	0.25	0.191
RMN	3	20	-	-	0.025	0.09	0.017	0.1	-	0.28	0.25	0.198
RMN	3	21	-	-	0.025	0.089	0.011	0.1	-	0.315	0.23	0.203
RMN	3	22	0.01	-	0.031	0.09	0.008	0.1	-	0.355	0.2	0.206
RMN	3	23	0.094	-	0.081	0.083	0.005	0.1	-	0.325	0.15	0.168
RMN	3	24	0.161	-	0.122	0.056	0.003	0.1	-	0.245	0.1	0.098
NCC	3	1	0.155	-	0.118	0.032	0.002	0.1	-	0.19	0.05	0.044
NCC	3	2	0.177	-	0.131	0.024	0.002	0.1	-	0.17	0.05	0.019
NCC	3	3	0.201	-	0.146	0.02	0.001	0.1	-	0.16	0.05	0.011
NCC	3	4	0.221	-	0.158	0.018	0.001	0.1	-	0.16	0.05	0.009
NCC	3	5	0.243	-	0.171	0.023	0.002	0.1	-	0.16	0.05	0.01
NCC	3	6	0.259	-	0.181	0.039	0.002	0.1	-	0.175	0.05	0.028
NCC	3	7	0.26	-	0.181	0.077	0.005	0.1	-	0.205	0.05	0.075
NCC	3	8	0.213	-	0.153	0.114	0.008	0.1	-	0.225	0.1	0.133
NCC	3	9	0.155	-	0.118	0.116	0.009	0.1	-	0.225	0.1	0.168
NCC	3	10	0.104	-	0.087	0.114	0.008	0.1	-	0.225	0.1	0.21
NCC	3	11	0.073	-	0.069	0.107	0.008	0.1	-	0.225	0.1	0.231
NCC	3	12	0.037	-	0.047	0.092	0.011	0.1	-	0.225	0.1	0.228
NCC	3	13	-	-	0.025	0.081	0.011	0.1	-	0.225	0.1	0.207
NCC	3	14	-	-	0.025	0.074	0.009	0.1	-	0.22	0.1	0.193
NCC	3	15	-	-	0.025	0.065	0.009	0.1	-	0.22	0.12	0.171
NCC	3	16	-	-	0.025	0.062	0.011	0.1	-	0.225	0.12	0.165
NCC	3	17	-	-	0.025	0.065	0.019	0.1	-	0.235	0.15	0.172
NCC	3	18	-	-	0.025	0.078	0.034	0.1	-	0.255	0.23	0.182
NCC	3	19	-	-	0.025	0.09	0.03	0.1	-	0.27	0.25	0.191
NCC	3	20	-	-	0.025	0.09	0.017	0.1	-	0.28	0.25	0.198
NCC	3	21	-	-	0.025	0.089	0.011	0.1	-	0.315	0.23	0.203
NCC	3	22	0.008	-	0.03	0.09	0.008	0.1	-	0.355	0.2	0.206
NCC	3	23	0.071	-	0.067	0.083	0.005	0.1	-	0.325	0.15	0.168
NCC	3	24	0.121	-	0.098	0.056	0.003	0.1	-	0.245	0.1	0.098
NCV	3	1	0.02	-	0.037	0.032	0.002	0.1	-	0.19	0.05	0.044
NCV	3	2	0.042	-	0.05	0.024	0.002	0.1	-	0.17	0.05	0.019
NCV	3	3	0.066	-	0.065	0.02	0.001	0.1	-	0.16	0.05	0.011
NCV	3	4	0.086	-	0.077	0.018	0.001	0.1	-	0.16	0.05	0.009
NCV	3	5	0.108	-	0.09	0.023	0.002	0.1	-	0.16	0.05	0.01
NCV	3	6	0.124	-	0.1	0.039	0.002	0.1	-	0.175	0.05	0.028
NCV	3	7	0.125	-	0.1	0.077	0.005	0.1	-	0.205	0.05	0.075
NCV	3	8	0.078	-	0.072	0.114	0.008	0.1	-	0.225	0.1	0.133
NCV	3	9	0.02	-	0.037	0.116	0.009	0.1	-	0.225	0.1	0.168
NCV	3	10	-	-	0.025	0.114	0.008	0.1	-	0.225	0.1	0.21
NCV	3	11	-	-	0.025	0.107	0.008	0.1	-	0.225	0.1	0.231
NCV	3	12	-	-	0.025	0.092	0.011	0.1	-	0.225	0.1	0.228
NCV	3	13	-	-	0.025	0.081	0.011	0.1	-	0.225	0.1	0.207
NCV	3	14	-	0.163	0.05	0.074	0.009	0.1	-	0.22	0.1	0.193
NCV	3	15	-	0.29	0.068	0.065	0.009	0.1	-	0.22	0.12	0.171
NCV	3	16	-	0.39	0.083	0.062	0.011	0.1	-	0.225	0.12	0.165
NCV	3	17	-	0.446	0.092	0.065	0.019	0.1	-	0.235	0.15	0.172
NCV	3	18	-	0.47	0.096	0.078	0.034	0.1	-	0.255	0.23	0.182
NCV	3	19	-	0.476	0.096	0.09	0.03	0.1	-	0.27	0.25	0.191
NCV	3	20	-	0.343	0.076	0.09	0.017	0.1	-	0.28	0.25	0.198
NCV	3	21	-	0.148	0.047	0.089	0.011	0.1	-	0.315	0.23	0.203
NCV	3	22	-	-	0.025	0.09	0.008	0.1	-	0.355	0.2	0.206
NCV	3	23	-	-	0.025	0.083	0.005	0.1	-	0.325	0.15	0.168
NCV	3	24	-	-	0.025	0.056	0.003	0.1	-	0.245	0.1	0.098
NCI	3	1	0.02	-	0.037	0.032	0.002	0.1	-	0.19	0.05	0.044
NCI	3	2	0.042	-	0.05	0.024	0.002	0.1	-	0.17	0.05	0.019
NCI	3	3	0.066	-	0.065	0.02	0.001	0.1	-	0.16	0.05	0.011
NCI	3	4	0.086	-	0.077	0.018	0.001	0.1	-	0.16	0.05	0.009
NCI	3	5	0.108	-	0.09	0.023	0.002	0.1	-	0.16	0.05	0.01

Climate	Day	Hour	Heating	Cooling	Vent	WaterHeat	Cooking	Refrig	ExtLight	IntLight	Electronics	Appliances
NCI	3	6	0.124	-	0.1	0.039	0.002	0.1	-	0.175	0.05	0.028
NCI	3	7	0.125	-	0.1	0.077	0.005	0.1	-	0.205	0.05	0.075
NCI	3	8	0.078	-	0.072	0.114	0.008	0.1	-	0.225	0.1	0.133
NCI	3	9	0.02	-	0.037	0.116	0.009	0.1	-	0.225	0.1	0.168
NCI	3	10	-	-	0.025	0.114	0.008	0.1	-	0.225	0.1	0.21
NCI	3	11	-	-	0.025	0.107	0.008	0.1	-	0.225	0.1	0.231
NCI	3	12	-	-	0.025	0.092	0.011	0.1	-	0.225	0.1	0.228
NCI	3	13	-	-	0.025	0.081	0.011	0.1	-	0.225	0.1	0.207
NCI	3	14	-	0.131	0.045	0.074	0.009	0.1	-	0.22	0.1	0.193
NCI	3	15	-	0.232	0.06	0.065	0.009	0.1	-	0.22	0.12	0.171
NCI	3	16	-	0.312	0.072	0.062	0.011	0.1	-	0.225	0.12	0.165
NCI	3	17	-	0.357	0.078	0.065	0.019	0.1	-	0.235	0.15	0.172
NCI	3	18	-	0.376	0.081	0.078	0.034	0.1	-	0.255	0.23	0.182
NCI	3	19	-	0.381	0.082	0.09	0.03	0.1	-	0.27	0.25	0.191
NCI	3	20	-	0.274	0.066	0.09	0.017	0.1	-	0.28	0.25	0.198
NCI	3	21	-	0.118	0.043	0.089	0.011	0.1	-	0.315	0.23	0.203
NCI	3	22	-	-	0.025	0.09	0.008	0.1	-	0.355	0.2	0.206
NCI	3	23	-	-	0.025	0.083	0.005	0.1	-	0.325	0.15	0.168
NCI	3	24	-	-	0.025	0.056	0.003	0.1	-	0.245	0.1	0.098
SCC	3	1	0.155	-	0.118	0.032	0.002	0.1	-	0.19	0.05	0.044
SCC	3	2	0.177	-	0.131	0.024	0.002	0.1	-	0.17	0.05	0.019
SCC	3	3	0.201	-	0.146	0.02	0.001	0.1	-	0.16	0.05	0.011
SCC	3	4	0.221	-	0.158	0.018	0.001	0.1	-	0.16	0.05	0.009
SCC	3	5	0.243	-	0.171	0.023	0.002	0.1	-	0.16	0.05	0.01
SCC	3	6	0.259	-	0.181	0.039	0.002	0.1	-	0.175	0.05	0.028
SCC	3	7	0.26	-	0.181	0.077	0.005	0.1	-	0.205	0.05	0.075
SCC	3	8	0.213	-	0.153	0.114	0.008	0.1	-	0.225	0.1	0.133
SCC	3	9	0.155	-	0.118	0.116	0.009	0.1	-	0.225	0.1	0.168
SCC	3	10	0.104	-	0.087	0.114	0.008	0.1	-	0.225	0.1	0.21
SCC	3	11	0.073	-	0.069	0.107	0.008	0.1	-	0.225	0.1	0.231
SCC	3	12	0.037	-	0.047	0.092	0.011	0.1	-	0.225	0.1	0.228
SCC	3	13	-	-	0.025	0.081	0.011	0.1	-	0.225	0.1	0.207
SCC	3	14	-	-	0.025	0.074	0.009	0.1	-	0.22	0.1	0.193
SCC	3	15	-	-	0.025	0.065	0.009	0.1	-	0.22	0.12	0.171
SCC	3	16	-	-	0.025	0.062	0.011	0.1	-	0.225	0.12	0.165
SCC	3	17	-	-	0.025	0.065	0.019	0.1	-	0.235	0.15	0.172
SCC	3	18	-	-	0.025	0.078	0.034	0.1	-	0.255	0.23	0.182
SCC	3	19	-	-	0.025	0.09	0.03	0.1	-	0.27	0.25	0.191
SCC	3	20	-	-	0.025	0.09	0.017	0.1	-	0.28	0.25	0.198
SCC	3	21	-	-	0.025	0.089	0.011	0.1	-	0.315	0.23	0.203
SCC	3	22	0.008	-	0.03	0.09	0.008	0.1	-	0.355	0.2	0.206
SCC	3	23	0.071	-	0.067	0.083	0.005	0.1	-	0.325	0.15	0.168
SCC	3	24	0.121	-	0.098	0.056	0.003	0.1	-	0.245	0.1	0.098
SCV	3	1	0.024	-	0.039	0.032	0.002	0.1	-	0.19	0.05	0.044
SCV	3	2	0.049	-	0.054	0.024	0.002	0.1	-	0.17	0.05	0.019
SCV	3	3	0.077	-	0.071	0.02	0.001	0.1	-	0.16	0.05	0.011
SCV	3	4	0.101	-	0.085	0.018	0.001	0.1	-	0.16	0.05	0.009
SCV	3	5	0.126	-	0.1	0.023	0.002	0.1	-	0.16	0.05	0.01
SCV	3	6	0.145	-	0.112	0.039	0.002	0.1	-	0.175	0.05	0.028
SCV	3	7	0.146	-	0.112	0.077	0.005	0.1	-	0.205	0.05	0.075
SCV	3	8	0.091	-	0.08	0.114	0.008	0.1	-	0.225	0.1	0.133
SCV	3	9	0.023	-	0.039	0.116	0.009	0.1	-	0.225	0.1	0.168
SCV	3	10	-	-	0.025	0.114	0.008	0.1	-	0.225	0.1	0.21
SCV	3	11	-	-	0.025	0.107	0.008	0.1	-	0.225	0.1	0.231
SCV	3	12	-	-	0.025	0.092	0.011	0.1	-	0.225	0.1	0.228
SCV	3	13	-	-	0.025	0.081	0.011	0.1	-	0.225	0.1	0.207
SCV	3	14	-	0.163	0.05	0.074	0.009	0.1	-	0.22	0.1	0.193
SCV	3	15	-	0.29	0.068	0.065	0.009	0.1	-	0.22	0.12	0.171
SCV	3	16	-	0.39	0.083	0.062	0.011	0.1	-	0.225	0.12	0.165
SCV	3	17	-	0.446	0.092	0.065	0.019	0.1	-	0.235	0.15	0.172
SCV	3	18	-	0.47	0.096	0.078	0.034	0.1	-	0.255	0.23	0.182
SCV	3	19	-	0.476	0.096	0.09	0.03	0.1	-	0.27	0.25	0.191
SCV	3	20	-	0.343	0.076	0.09	0.017	0.1	-	0.28	0.25	0.198
SCV	3	21	-	0.148	0.047	0.089	0.011	0.1	-	0.315	0.23	0.203
SCV	3	22	-	-	0.025	0.09	0.008	0.1	-	0.355	0.2	0.206
SCV	3	23	-	-	0.025	0.083	0.005	0.1	-	0.325	0.15	0.168
SCV	3	24	-	-	0.025	0.056	0.003	0.1	-	0.245	0.1	0.098
SCI	3	1	0.024	-	0.039	0.032	0.002	0.1	-	0.19	0.05	0.044
SCI	3	2	0.049	-	0.054	0.024	0.002	0.1	-	0.17	0.05	0.019
SCI	3	3	0.077	-	0.071	0.02	0.001	0.1	-	0.16	0.05	0.011
SCI	3	4	0.101	-	0.085	0.018	0.001	0.1	-	0.16	0.05	0.009
SCI	3	5	0.126	-	0.1	0.023	0.002	0.1	-	0.16	0.05	0.01
SCI	3	6	0.145	-	0.112	0.039	0.002	0.1	-	0.175	0.05	0.028
SCI	3	7	0.146	-	0.112	0.077	0.005	0.1	-	0.205	0.05	0.075
SCI	3	8	0.091	-	0.08	0.114	0.008	0.1	-	0.225	0.1	0.133
SCI	3	9	0.023	-	0.039	0.116	0.009	0.1	-	0.225	0.1	0.168
SCI	3	10	-	-	0.025	0.114	0.008	0.1	-	0.225	0.1	0.21
SCI	3	11	-	-	0.025	0.107	0.008	0.1	-	0.225	0.1	0.231
SCI	3	12	-	-	0.025	0.092	0.011	0.1	-	0.225	0.1	0.228
SCI	3	13	-	-	0.025	0.081	0.011	0.1	-	0.225	0.1	0.207
SCI	3	14	-	0.163	0.05	0.074	0.009	0.1	-	0.22	0.1	0.193
SCI	3	15	-	0.29	0.068	0.065	0.009	0.1	-	0.22	0.12	0.171
SCI	3	16	-	0.39	0.083	0.062	0.011	0.1	-	0.225	0.12	0.165
SCI	3	17	-	0.446	0.092	0.065	0.019	0.1	-	0.235	0.15	0.172
SCI	3	18	-	0.47	0.096	0.078	0.034	0.1	-	0.255	0.23	0.182
SCI	3	19	-	0.476	0.096	0.09	0.03	0.1	-	0.27	0.25	0.191
SCI	3	20	-	0.343	0.076	0.09	0.017	0.1	-	0.28	0.25	0.198
SCI	3	21	-	0.148	0.047	0.089	0.011	0.1	-	0.315	0.23	0.203
SCI	3	22	-	-	0.025	0.09	0.008	0.1	-	0.355	0.2	0.206
SCI	3	23	-	-	0.025	0.083	0.005	0.1	-	0.325	0.15	0.168
SCI	3	24	-	-	0.025	0.056	0.003	0.1	-	0.245	0.1	0.098
DSW	3	1	-	0.363	0.079	0.032	0.002	0.1	-	0.19	0.05	0.044
DSW	3	2	-	0.248	0.062	0.024	0.002	0.1	-	0.17	0.05	0.019
DSW	3	3	-	0.12	0.043	0.02	0.001	0.1	-	0.16	0.05	0.011
DSW	3	4	-	0.019	0.028	0.018	0.001	0.1	-	0.16	0.05	0.009

Climate	Day	Hour	Heating	Cooling	Vent	WaterHeat	Cooking	Refrig	ExtLight	IntLight	Electronics	Appliances
DSW	3	5	-	-	0.025	0.023	0.002	0.1	-	0.16	0.05	0.01
DSW	3	6	-	-	0.025	0.039	0.002	0.1	-	0.175	0.05	0.028
DSW	3	7	-	-	0.025	0.077	0.005	0.1	-	0.205	0.05	0.075
DSW	3	8	-	0.061	0.034	0.114	0.008	0.1	-	0.225	0.1	0.133
DSW	3	9	-	0.373	0.081	0.116	0.009	0.1	-	0.225	0.1	0.168
DSW	3	10	-	0.656	0.123	0.114	0.008	0.1	-	0.225	0.1	0.21
DSW	3	11	-	0.83	0.15	0.107	0.008	0.1	-	0.225	0.1	0.231
DSW	3	12	-	1.043	0.181	0.092	0.011	0.1	-	0.225	0.1	0.228
DSW	3	13	-	1.344	0.227	0.081	0.011	0.1	-	0.225	0.1	0.207
DSW	3	14	-	1.68	0.277	0.074	0.009	0.1	-	0.22	0.1	0.193
DSW	3	15	-	1.913	0.312	0.065	0.009	0.1	-	0.22	0.12	0.171
DSW	3	16	-	2.101	0.34	0.062	0.011	0.1	-	0.225	0.12	0.165
DSW	3	17	-	2.204	0.356	0.065	0.019	0.1	-	0.235	0.15	0.172
DSW	3	18	-	2.248	0.362	0.078	0.034	0.1	-	0.255	0.23	0.182
DSW	3	19	-	2.258	0.364	0.09	0.03	0.1	-	0.27	0.25	0.191
DSW	3	20	-	1.994	0.324	0.09	0.017	0.1	-	0.28	0.25	0.198
DSW	3	21	-	1.619	0.268	0.089	0.011	0.1	-	0.315	0.23	0.203
DSW	3	22	-	1.195	0.204	0.09	0.008	0.1	-	0.355	0.2	0.206
DSW	3	23	-	0.828	0.149	0.083	0.005	0.1	-	0.325	0.15	0.168
DSW	3	24	-	0.547	0.107	0.056	0.003	0.1	-	0.245	0.1	0.098
HID	3	1	0.006	-	0.029	0.032	0.002	0.1	-	0.19	0.05	0.044
HID	3	2	0.031	-	0.044	0.024	0.002	0.1	-	0.17	0.05	0.019
HID	3	3	0.06	-	0.061	0.02	0.001	0.1	-	0.16	0.05	0.011
HID	3	4	0.083	-	0.075	0.018	0.001	0.1	-	0.16	0.05	0.009
HID	3	5	0.108	-	0.09	0.023	0.002	0.1	-	0.16	0.05	0.01
HID	3	6	0.128	-	0.102	0.039	0.002	0.1	-	0.175	0.05	0.028
HID	3	7	0.128	-	0.102	0.077	0.005	0.1	-	0.205	0.05	0.075
HID	3	8	0.074	-	0.069	0.114	0.008	0.1	-	0.225	0.1	0.133
HID	3	9	0.005	-	0.028	0.116	0.009	0.1	-	0.225	0.1	0.168
HID	3	10	-	-	0.025	0.114	0.008	0.1	-	0.225	0.1	0.21
HID	3	11	-	-	0.025	0.107	0.008	0.1	-	0.225	0.1	0.231
HID	3	12	-	-	0.025	0.092	0.011	0.1	-	0.225	0.1	0.228
HID	3	13	-	0.037	0.031	0.081	0.011	0.1	-	0.225	0.1	0.207
HID	3	14	-	0.215	0.057	0.074	0.009	0.1	-	0.22	0.1	0.193
HID	3	15	-	0.342	0.076	0.065	0.009	0.1	-	0.22	0.12	0.171
HID	3	16	-	0.444	0.092	0.062	0.011	0.1	-	0.225	0.12	0.165
HID	3	17	-	0.5	0.1	0.065	0.019	0.1	-	0.235	0.15	0.172
HID	3	18	-	0.525	0.104	0.078	0.034	0.1	-	0.255	0.23	0.182
HID	3	19	-	0.531	0.105	0.09	0.03	0.1	-	0.27	0.25	0.191
HID	3	20	-	0.396	0.084	0.09	0.017	0.1	-	0.28	0.25	0.198
HID	3	21	-	0.198	0.055	0.089	0.011	0.1	-	0.315	0.23	0.203
HID	3	22	-	-	0.025	0.09	0.008	0.1	-	0.355	0.2	0.206
HID	3	23	-	-	0.025	0.083	0.005	0.1	-	0.325	0.15	0.168
HID	3	24	-	-	0.025	0.056	0.003	0.1	-	0.245	0.1	0.098
NWC	4	1	0.545	-	0.156	0.129	0.007	0.09	0.12	0.221	0.055	0.044
NWC	4	2	0.604	-	0.17	0.098	0.006	0.09	0.12	0.199	0.055	0.019
NWC	4	3	0.675	-	0.187	0.082	0.006	0.09	0.12	0.191	0.055	0.011
NWC	4	4	0.733	-	0.201	0.076	0.006	0.09	0.12	0.188	0.055	0.009
NWC	4	5	0.795	-	0.216	0.093	0.006	0.09	0.12	0.191	0.055	0.01
NWC	4	6	0.844	-	0.228	0.169	0.011	0.09	0.12	0.214	0.055	0.029
NWC	4	7	0.846	-	0.228	0.352	0.021	0.09	0.12	0.277	0.055	0.075
NWC	4	8	0.709	-	0.195	0.551	0.034	0.09	0.09	0.32	0.11	0.132
NWC	4	9	0.539	-	0.154	0.526	0.033	0.09	0.02	0.296	0.11	0.168
NWC	4	10	0.39	-	0.119	0.478	0.032	0.09	0.02	0.281	0.11	0.21
NWC	4	11	0.3	-	0.097	0.43	0.033	0.09	0.02	0.272	0.11	0.231
NWC	4	12	0.196	-	0.072	0.371	0.042	0.09	0.02	0.266	0.11	0.227
NWC	4	13	0.055	-	0.038	0.326	0.045	0.09	0.02	0.26	0.11	0.206
NWC	4	14	-	-	0.025	0.293	0.037	0.09	0.02	0.251	0.11	0.192
NWC	4	15	-	-	0.025	0.256	0.036	0.09	0.02	0.251	0.12	0.171
NWC	4	16	-	-	0.025	0.248	0.047	0.09	0.02	0.266	0.12	0.165
NWC	4	17	-	-	0.025	0.273	0.087	0.09	0.02	0.307	0.165	0.172
NWC	4	18	-	-	0.025	0.338	0.154	0.09	0.02	0.38	0.235	0.183
NWC	4	19	-	-	0.025	0.402	0.124	0.09	0.02	0.426	0.263	0.192
NWC	4	20	-	-	0.025	0.399	0.065	0.09	0.09	0.434	0.275	0.199
NWC	4	21	0.042	-	0.035	0.374	0.039	0.09	0.12	0.446	0.253	0.203
NWC	4	22	0.215	-	0.077	0.36	0.027	0.09	-	0.445	0.22	0.206
NWC	4	23	0.359	-	0.111	0.315	0.017	0.09	-	0.385	0.165	0.168
NWC	4	24	0.462	-	0.136	0.217	0.01	0.09	-	0.288	0.11	0.098
NWV	4	1	0.545	-	0.156	0.104	0.006	0.09	0.12	0.221	0.055	0.044
NWV	4	2	0.604	-	0.17	0.079	0.005	0.09	0.12	0.199	0.055	0.019
NWV	4	3	0.675	-	0.187	0.065	0.005	0.09	0.12	0.191	0.055	0.011
NWV	4	4	0.733	-	0.201	0.061	0.005	0.09	0.12	0.188	0.055	0.009
NWV	4	5	0.795	-	0.216	0.074	0.005	0.09	0.12	0.191	0.055	0.01
NWV	4	6	0.844	-	0.228	0.135	0.008	0.09	0.12	0.214	0.055	0.029
NWV	4	7	0.846	-	0.228	0.281	0.017	0.09	0.12	0.277	0.055	0.075
NWV	4	8	0.709	-	0.195	0.441	0.027	0.09	0.09	0.32	0.11	0.132
NWV	4	9	0.539	-	0.154	0.421	0.027	0.09	0.02	0.296	0.11	0.168
NWV	4	10	0.39	-	0.119	0.383	0.026	0.09	0.02	0.281	0.11	0.21
NWV	4	11	0.3	-	0.097	0.344	0.026	0.09	0.02	0.272	0.11	0.231
NWV	4	12	0.196	-	0.072	0.297	0.034	0.09	0.02	0.266	0.11	0.227
NWV	4	13	0.055	-	0.038	0.261	0.036	0.09	0.02	0.26	0.11	0.206
NWV	4	14	-	-	0.025	0.234	0.03	0.09	0.02	0.251	0.11	0.192
NWV	4	15	-	-	0.025	0.205	0.029	0.09	0.02	0.251	0.12	0.171
NWV	4	16	-	-	0.025	0.198	0.038	0.09	0.02	0.266	0.12	0.165
NWV	4	17	-	-	0.025	0.218	0.07	0.09	0.02	0.307	0.165	0.172
NWV	4	18	-	-	0.025	0.27	0.123	0.09	0.02	0.38	0.235	0.183
NWV	4	19	-	-	0.025	0.322	0.099	0.09	0.02	0.426	0.263	0.192
NWV	4	20	-	-	0.025	0.32	0.052	0.09	0.09	0.434	0.275	0.199
NWV	4	21	0.042	-	0.035	0.299	0.031	0.09	0.12	0.446	0.253	0.203
NWV	4	22	0.215	-	0.077	0.288	0.022	0.09	-	0.445	0.22	0.206
NWV	4	23	0.359	-	0.111	0.252	0.014	0.09	-	0.385	0.165	0.168
NWV	4	24	0.462	-	0.136	0.173	0.008	0.09	-	0.288	0.11	0.098
NWI	4	1	0.122	-	0.054	0.129	0.007	0.09	0.12	0.221	0.055	0.044
NWI	4	2	0.19	-	0.071	0.098	0.006	0.09	0.12	0.199	0.055	0.019
NWI	4	3	0.271	-	0.09	0.082	0.006	0.09	0.12	0.191	0.055	0.011

Climate	Day	Hour	Heating	Cooling	Vent	WaterHeat	Cooking	Refrig	ExtLight	IntLight	Electronics	Appliances
NWI	4	4	0.337	-	0.106	0.076	0.006	0.09	0.12	0.188	0.055	0.009
NWI	4	5	0.409	-	0.123	0.093	0.006	0.09	0.12	0.191	0.055	0.01
NWI	4	6	0.464	-	0.136	0.169	0.011	0.09	0.12	0.214	0.055	0.029
NWI	4	7	0.467	-	0.137	0.352	0.021	0.09	0.12	0.277	0.055	0.075
NWI	4	8	0.31	-	0.1	0.551	0.034	0.09	0.09	0.32	0.11	0.132
NWI	4	9	0.116	-	0.053	0.526	0.033	0.09	0.02	0.296	0.11	0.168
NWI	4	10	-	-	0.025	0.478	0.032	0.09	0.02	0.281	0.11	0.21
NWI	4	11	-	-	0.025	0.43	0.033	0.09	0.02	0.272	0.11	0.231
NWI	4	12	-	-	0.025	0.371	0.042	0.09	0.02	0.266	0.11	0.227
NWI	4	13	-	-	0.025	0.326	0.045	0.09	0.02	0.26	0.11	0.206
NWI	4	14	-	-	0.025	0.293	0.037	0.09	0.02	0.251	0.11	0.192
NWI	4	15	-	0.051	0.033	0.256	0.036	0.09	0.02	0.251	0.12	0.171
NWI	4	16	-	0.108	0.041	0.248	0.047	0.09	0.02	0.266	0.12	0.165
NWI	4	17	-	0.14	0.046	0.273	0.087	0.09	0.02	0.307	0.165	0.172
NWI	4	18	-	0.155	0.048	0.338	0.154	0.09	0.02	0.38	0.235	0.183
NWI	4	19	-	0.158	0.049	0.402	0.124	0.09	0.02	0.426	0.263	0.192
NWI	4	20	-	0.083	0.038	0.399	0.065	0.09	0.09	0.434	0.275	0.199
NWI	4	21	-	-	0.025	0.374	0.039	0.09	0.12	0.446	0.253	0.203
NWI	4	22	-	-	0.025	0.36	0.027	0.09	-	0.445	0.22	0.206
NWI	4	23	-	-	0.025	0.315	0.017	0.09	-	0.385	0.165	0.168
NWI	4	24	0.029	-	0.032	0.217	0.01	0.09	-	0.288	0.11	0.098
RMN	4	1	0.622	-	0.174	0.035	0.002	0.09	0.12	0.221	0.055	0.044
RMN	4	2	0.69	-	0.191	0.026	0.002	0.09	0.12	0.199	0.055	0.019
RMN	4	3	0.771	-	0.21	0.022	0.002	0.09	0.12	0.191	0.055	0.011
RMN	4	4	0.837	-	0.226	0.02	0.002	0.09	0.12	0.188	0.055	0.009
RMN	4	5	0.909	-	0.243	0.025	0.002	0.09	0.12	0.191	0.055	0.01
RMN	4	6	0.964	-	0.256	0.045	0.003	0.09	0.12	0.214	0.055	0.029
RMN	4	7	0.967	-	0.257	0.094	0.006	0.09	0.12	0.277	0.055	0.075
RMN	4	8	0.81	-	0.22	0.147	0.009	0.09	0.09	0.32	0.11	0.132
RMN	4	9	0.616	-	0.173	0.14	0.009	0.09	0.02	0.296	0.11	0.168
RMN	4	10	0.446	-	0.132	0.128	0.009	0.09	0.02	0.281	0.11	0.21
RMN	4	11	0.343	-	0.107	0.115	0.009	0.09	0.02	0.272	0.11	0.231
RMN	4	12	0.225	-	0.079	0.099	0.011	0.09	0.02	0.266	0.11	0.227
RMN	4	13	0.063	-	0.04	0.087	0.012	0.09	0.02	0.26	0.11	0.206
RMN	4	14	-	-	0.025	0.078	0.01	0.09	0.02	0.251	0.11	0.192
RMN	4	15	-	-	0.025	0.068	0.01	0.09	0.02	0.251	0.12	0.171
RMN	4	16	-	-	0.025	0.066	0.013	0.09	0.02	0.266	0.12	0.165
RMN	4	17	-	-	0.025	0.073	0.023	0.09	0.02	0.307	0.165	0.172
RMN	4	18	-	-	0.025	0.09	0.041	0.09	0.02	0.38	0.235	0.183
RMN	4	19	-	-	0.025	0.107	0.033	0.09	0.02	0.426	0.263	0.192
RMN	4	20	-	-	0.025	0.107	0.017	0.09	0.09	0.434	0.275	0.199
RMN	4	21	0.048	-	0.036	0.1	0.01	0.09	0.12	0.446	0.253	0.203
RMN	4	22	0.246	-	0.084	0.096	0.007	0.09	-	0.445	0.22	0.206
RMN	4	23	0.41	-	0.123	0.084	0.005	0.09	-	0.385	0.165	0.168
RMN	4	24	0.529	-	0.152	0.058	0.003	0.09	-	0.288	0.11	0.098
NCC	4	1	0.187	-	0.137	0.035	0.002	0.09	0.12	0.221	0.055	0.044
NCC	4	2	0.207	-	0.149	0.026	0.002	0.09	0.12	0.199	0.055	0.019
NCC	4	3	0.231	-	0.164	0.022	0.002	0.09	0.12	0.191	0.055	0.011
NCC	4	4	0.251	-	0.176	0.02	0.002	0.09	0.12	0.188	0.055	0.009
NCC	4	5	0.273	-	0.189	0.025	0.002	0.09	0.12	0.191	0.055	0.01
NCC	4	6	0.289	-	0.199	0.045	0.003	0.09	0.12	0.214	0.055	0.029
NCC	4	7	0.29	-	0.199	0.094	0.006	0.09	0.12	0.277	0.055	0.075
NCC	4	8	0.243	-	0.171	0.147	0.009	0.09	0.09	0.32	0.11	0.132
NCC	4	9	0.185	-	0.136	0.14	0.009	0.09	0.02	0.296	0.11	0.168
NCC	4	10	0.134	-	0.105	0.128	0.009	0.09	0.02	0.281	0.11	0.21
NCC	4	11	0.103	-	0.087	0.115	0.009	0.09	0.02	0.272	0.11	0.231
NCC	4	12	0.067	-	0.065	0.099	0.011	0.09	0.02	0.266	0.11	0.227
NCC	4	13	0.019	-	0.036	0.087	0.012	0.09	0.02	0.26	0.11	0.206
NCC	4	14	-	-	0.025	0.078	0.01	0.09	0.02	0.251	0.11	0.192
NCC	4	15	-	-	0.025	0.068	0.01	0.09	0.02	0.251	0.12	0.171
NCC	4	16	-	-	0.025	0.066	0.013	0.09	0.02	0.266	0.12	0.165
NCC	4	17	-	-	0.025	0.073	0.023	0.09	0.02	0.307	0.165	0.172
NCC	4	18	-	-	0.025	0.09	0.041	0.09	0.02	0.38	0.235	0.183
NCC	4	19	-	-	0.025	0.107	0.033	0.09	0.02	0.426	0.263	0.192
NCC	4	20	-	-	0.025	0.107	0.017	0.09	0.09	0.434	0.275	0.199
NCC	4	21	0.014	-	0.034	0.1	0.01	0.09	0.12	0.446	0.253	0.203
NCC	4	22	0.074	-	0.069	0.096	0.007	0.09	-	0.445	0.22	0.206
NCC	4	23	0.123	-	0.099	0.084	0.005	0.09	-	0.385	0.165	0.168
NCC	4	24	0.159	-	0.12	0.058	0.003	0.09	-	0.288	0.11	0.098
NCV	4	1	0.112	-	0.092	0.035	0.002	0.09	0.12	0.221	0.055	0.044
NCV	4	2	0.132	-	0.104	0.026	0.002	0.09	0.12	0.199	0.055	0.019
NCV	4	3	0.156	-	0.119	0.022	0.002	0.09	0.12	0.191	0.055	0.011
NCV	4	4	0.176	-	0.131	0.02	0.002	0.09	0.12	0.188	0.055	0.009
NCV	4	5	0.198	-	0.144	0.025	0.002	0.09	0.12	0.191	0.055	0.01
NCV	4	6	0.214	-	0.154	0.045	0.003	0.09	0.12	0.214	0.055	0.029
NCV	4	7	0.215	-	0.154	0.094	0.006	0.09	0.12	0.277	0.055	0.075
NCV	4	8	0.168	-	0.126	0.147	0.009	0.09	0.09	0.32	0.11	0.132
NCV	4	9	0.11	-	0.091	0.14	0.009	0.09	0.02	0.296	0.11	0.168
NCV	4	10	0.059	-	0.06	0.128	0.009	0.09	0.02	0.281	0.11	0.21
NCV	4	11	0.028	-	0.042	0.115	0.009	0.09	0.02	0.272	0.11	0.231
NCV	4	12	-	-	0.025	0.099	0.011	0.09	0.02	0.266	0.11	0.227
NCV	4	13	-	-	0.025	0.087	0.012	0.09	0.02	0.26	0.11	0.206
NCV	4	14	-	-	0.025	0.078	0.01	0.09	0.02	0.251	0.11	0.192
NCV	4	15	-	-	0.025	0.068	0.01	0.09	0.02	0.251	0.12	0.171
NCV	4	16	-	-	0.025	0.066	0.013	0.09	0.02	0.266	0.12	0.165
NCV	4	17	-	-	0.025	0.073	0.023	0.09	0.02	0.307	0.165	0.172
NCV	4	18	-	0.007	0.026	0.09	0.041	0.09	0.02	0.38	0.235	0.183
NCV	4	19	-	0.013	0.027	0.107	0.033	0.09	0.02	0.426	0.263	0.192
NCV	4	20	-	-	0.025	0.107	0.017	0.09	0.09	0.434	0.275	0.199
NCV	4	21	-	-	0.025	0.1	0.01	0.09	0.12	0.446	0.253	0.203
NCV	4	22	-	-	0.025	0.096	0.007	0.09	-	0.445	0.22	0.206
NCV	4	23	0.048	-	0.054	0.084	0.005	0.09	-	0.385	0.165	0.168
NCV	4	24	0.084	-	0.075	0.058	0.003	0.09	-	0.288	0.11	0.098
NCI	4	1	0.112	-	0.092	0.035	0.002	0.09	0.12	0.221	0.055	0.044
NCI	4	2	0.132	-	0.104	0.026	0.002	0.09	0.12	0.199	0.055	0.019

Climate	Day	Hour	Heating	Cooling	Vent	WaterHeat	Cooking	Refrig	ExtLight	IntLight	Electronics	Appliances
NCI	4	3	0.156	-	0.119	0.022	0.002	0.09	0.12	0.191	0.055	0.011
NCI	4	4	0.176	-	0.131	0.02	0.002	0.09	0.12	0.188	0.055	0.009
NCI	4	5	0.198	-	0.144	0.025	0.002	0.09	0.12	0.191	0.055	0.01
NCI	4	6	0.214	-	0.154	0.045	0.003	0.09	0.12	0.214	0.055	0.029
NCI	4	7	0.215	-	0.154	0.094	0.006	0.09	0.12	0.277	0.055	0.075
NCI	4	8	0.168	-	0.126	0.147	0.009	0.09	0.09	0.32	0.11	0.132
NCI	4	9	0.11	-	0.091	0.14	0.009	0.09	0.02	0.296	0.11	0.168
NCI	4	10	0.059	-	0.06	0.128	0.009	0.09	0.02	0.281	0.11	0.21
NCI	4	11	0.028	-	0.042	0.115	0.009	0.09	0.02	0.272	0.11	0.231
NCI	4	12	-	-	0.025	0.099	0.011	0.09	0.02	0.266	0.11	0.227
NCI	4	13	-	-	0.025	0.087	0.012	0.09	0.02	0.26	0.11	0.206
NCI	4	14	-	-	0.025	0.078	0.01	0.09	0.02	0.251	0.11	0.192
NCI	4	15	-	-	0.025	0.068	0.01	0.09	0.02	0.251	0.12	0.171
NCI	4	16	-	-	0.025	0.066	0.013	0.09	0.02	0.266	0.12	0.165
NCI	4	17	-	-	0.025	0.073	0.023	0.09	0.02	0.307	0.165	0.172
NCI	4	18	-	0.006	0.026	0.09	0.041	0.09	0.02	0.38	0.235	0.183
NCI	4	19	-	0.01	0.027	0.107	0.033	0.09	0.02	0.426	0.263	0.192
NCI	4	20	-	-	0.025	0.107	0.017	0.09	0.09	0.434	0.275	0.199
NCI	4	21	-	-	0.025	0.1	0.01	0.09	0.12	0.446	0.253	0.203
NCI	4	22	-	-	0.025	0.096	0.007	0.09	-	0.445	0.22	0.206
NCI	4	23	0.048	-	0.054	0.084	0.005	0.09	-	0.385	0.165	0.168
NCI	4	24	0.084	-	0.075	0.058	0.003	0.09	-	0.288	0.11	0.098
SCC	4	1	0.185	-	0.136	0.035	0.002	0.09	0.12	0.221	0.055	0.044
SCC	4	2	0.207	-	0.149	0.026	0.002	0.09	0.12	0.199	0.055	0.019
SCC	4	3	0.231	-	0.164	0.022	0.002	0.09	0.12	0.191	0.055	0.011
SCC	4	4	0.251	-	0.176	0.02	0.002	0.09	0.12	0.188	0.055	0.009
SCC	4	5	0.273	-	0.189	0.025	0.002	0.09	0.12	0.191	0.055	0.01
SCC	4	6	0.289	-	0.199	0.045	0.003	0.09	0.12	0.214	0.055	0.029
SCC	4	7	0.29	-	0.199	0.094	0.006	0.09	0.12	0.277	0.055	0.075
SCC	4	8	0.243	-	0.171	0.147	0.009	0.09	0.09	0.32	0.11	0.132
SCC	4	9	0.185	-	0.136	0.14	0.009	0.09	0.02	0.296	0.11	0.168
SCC	4	10	0.134	-	0.105	0.128	0.009	0.09	0.02	0.281	0.11	0.21
SCC	4	11	0.103	-	0.087	0.115	0.009	0.09	0.02	0.272	0.11	0.231
SCC	4	12	0.067	-	0.065	0.099	0.011	0.09	0.02	0.266	0.11	0.227
SCC	4	13	0.019	-	0.036	0.087	0.012	0.09	0.02	0.26	0.11	0.206
SCC	4	14	-	-	0.025	0.078	0.01	0.09	0.02	0.251	0.11	0.192
SCC	4	15	-	-	0.025	0.068	0.01	0.09	0.02	0.251	0.12	0.171
SCC	4	16	-	-	0.025	0.066	0.013	0.09	0.02	0.266	0.12	0.165
SCC	4	17	-	-	0.025	0.073	0.023	0.09	0.02	0.307	0.165	0.172
SCC	4	18	-	-	0.025	0.09	0.041	0.09	0.02	0.38	0.235	0.183
SCC	4	19	-	-	0.025	0.107	0.033	0.09	0.02	0.426	0.263	0.192
SCC	4	20	-	-	0.025	0.107	0.017	0.09	0.09	0.434	0.275	0.199
SCC	4	21	-	-	0.025	0.1	0.01	0.09	0.12	0.446	0.253	0.203
SCC	4	22	0.038	-	0.048	0.096	0.007	0.09	-	0.445	0.22	0.206
SCC	4	23	0.101	-	0.085	0.084	0.005	0.09	-	0.385	0.165	0.168
SCC	4	24	0.151	-	0.116	0.058	0.003	0.09	-	0.288	0.11	0.098
SCV	4	1	0.111	-	0.092	0.035	0.002	0.09	0.12	0.221	0.055	0.044
SCV	4	2	0.136	-	0.107	0.026	0.002	0.09	0.12	0.199	0.055	0.019
SCV	4	3	0.165	-	0.124	0.022	0.002	0.09	0.12	0.191	0.055	0.011
SCV	4	4	0.188	-	0.138	0.02	0.002	0.09	0.12	0.188	0.055	0.009
SCV	4	5	0.213	-	0.153	0.025	0.002	0.09	0.12	0.191	0.055	0.01
SCV	4	6	0.233	-	0.165	0.045	0.003	0.09	0.12	0.214	0.055	0.029
SCV	4	7	0.233	-	0.165	0.094	0.006	0.09	0.12	0.277	0.055	0.075
SCV	4	8	0.179	-	0.132	0.147	0.009	0.09	0.09	0.32	0.11	0.132
SCV	4	9	0.11	-	0.091	0.14	0.009	0.09	0.02	0.296	0.11	0.168
SCV	4	10	0.051	-	0.056	0.128	0.009	0.09	0.02	0.281	0.11	0.21
SCV	4	11	0.015	-	0.034	0.115	0.009	0.09	0.02	0.272	0.11	0.231
SCV	4	12	-	-	0.025	0.099	0.011	0.09	0.02	0.266	0.11	0.227
SCV	4	13	-	-	0.025	0.087	0.012	0.09	0.02	0.26	0.11	0.206
SCV	4	14	-	-	0.025	0.078	0.01	0.09	0.02	0.251	0.11	0.192
SCV	4	15	-	-	0.025	0.068	0.01	0.09	0.02	0.251	0.12	0.171
SCV	4	16	-	-	0.025	0.066	0.013	0.09	0.02	0.266	0.12	0.165
SCV	4	17	-	0.033	0.03	0.073	0.023	0.09	0.02	0.307	0.165	0.172
SCV	4	18	-	0.056	0.033	0.09	0.041	0.09	0.02	0.38	0.235	0.183
SCV	4	19	-	0.062	0.034	0.107	0.033	0.09	0.02	0.426	0.263	0.192
SCV	4	20	-	-	0.025	0.107	0.017	0.09	0.09	0.434	0.275	0.199
SCV	4	21	-	-	0.025	0.1	0.01	0.09	0.12	0.446	0.253	0.203
SCV	4	22	-	-	0.025	0.096	0.007	0.09	-	0.445	0.22	0.206
SCV	4	23	0.012	-	0.032	0.084	0.005	0.09	-	0.385	0.165	0.168
SCV	4	24	0.071	-	0.068	0.058	0.003	0.09	-	0.288	0.11	0.098
SCI	4	1	0.129	-	0.102	0.035	0.002	0.09	0.12	0.221	0.055	0.044
SCI	4	2	0.154	-	0.117	0.026	0.002	0.09	0.12	0.199	0.055	0.019
SCI	4	3	0.182	-	0.134	0.022	0.002	0.09	0.12	0.191	0.055	0.011
SCI	4	4	0.206	-	0.148	0.02	0.002	0.09	0.12	0.188	0.055	0.009
SCI	4	5	0.231	-	0.163	0.025	0.002	0.09	0.12	0.191	0.055	0.01
SCI	4	6	0.25	-	0.175	0.045	0.003	0.09	0.12	0.214	0.055	0.029
SCI	4	7	0.251	-	0.175	0.094	0.006	0.09	0.12	0.277	0.055	0.075
SCI	4	8	0.196	-	0.143	0.147	0.009	0.09	0.09	0.32	0.11	0.132
SCI	4	9	0.128	-	0.102	0.14	0.009	0.09	0.02	0.296	0.11	0.168
SCI	4	10	0.069	-	0.066	0.128	0.009	0.09	0.02	0.281	0.11	0.21
SCI	4	11	0.033	-	0.045	0.115	0.009	0.09	0.02	0.272	0.11	0.231
SCI	4	12	-	-	0.025	0.099	0.011	0.09	0.02	0.266	0.11	0.227
SCI	4	13	-	-	0.025	0.087	0.012	0.09	0.02	0.26	0.11	0.206
SCI	4	14	-	-	0.025	0.078	0.01	0.09	0.02	0.251	0.11	0.192
SCI	4	15	-	-	0.025	0.068	0.01	0.09	0.02	0.251	0.12	0.171
SCI	4	16	-	-	0.025	0.066	0.013	0.09	0.02	0.266	0.12	0.165
SCI	4	17	-	-	0.025	0.073	0.023	0.09	0.02	0.307	0.165	0.172
SCI	4	18	-	0.007	0.026	0.09	0.041	0.09	0.02	0.38	0.235	0.183
SCI	4	19	-	0.013	0.027	0.107	0.033	0.09	0.02	0.426	0.263	0.192
SCI	4	20	-	-	0.025	0.107	0.017	0.09	0.09	0.434	0.275	0.199
SCI	4	21	-	-	0.025	0.1	0.01	0.09	0.12	0.446	0.253	0.203
SCI	4	22	-	-	0.025	0.096	0.007	0.09	-	0.445	0.22	0.206
SCI	4	23	0.03	-	0.043	0.084	0.005	0.09	-	0.385	0.165	0.168
SCI	4	24	0.089	-	0.078	0.058	0.003	0.09	-	0.288	0.11	0.098
DSW	4	1	-	-	0.025	0.035	0.002	0.09	0.12	0.221	0.055	0.044

Climate	Day	Hour	Heating	Cooling	Vent	WaterHeat	Cooking	Refrig	ExtLight	IntLight	Electronics	Appliances
DSW	4	2	-	-	0.025	0.026	0.002	0.09	0.12	0.199	0.055	0.019
DSW	4	3	-	-	0.025	0.022	0.002	0.09	0.12	0.191	0.055	0.011
DSW	4	4	-	-	0.025	0.02	0.002	0.09	0.12	0.188	0.055	0.009
DSW	4	5	-	-	0.025	0.025	0.002	0.09	0.12	0.191	0.055	0.01
DSW	4	6	-	-	0.025	0.045	0.003	0.09	0.12	0.214	0.055	0.029
DSW	4	7	-	-	0.025	0.094	0.006	0.09	0.12	0.277	0.055	0.075
DSW	4	8	-	-	0.025	0.147	0.009	0.09	0.09	0.32	0.11	0.132
DSW	4	9	-	-	0.025	0.14	0.009	0.09	0.02	0.296	0.11	0.168
DSW	4	10	-	-	0.025	0.128	0.009	0.09	0.02	0.281	0.11	0.21
DSW	4	11	-	0.011	0.027	0.115	0.009	0.09	0.02	0.272	0.11	0.231
DSW	4	12	-	0.196	0.054	0.099	0.011	0.09	0.02	0.266	0.11	0.227
DSW	4	13	-	0.46	0.094	0.087	0.012	0.09	0.02	0.26	0.11	0.206
DSW	4	14	-	0.759	0.139	0.078	0.01	0.09	0.02	0.251	0.11	0.192
DSW	4	15	-	0.971	0.171	0.068	0.01	0.09	0.02	0.251	0.12	0.171
DSW	4	16	-	1.14	0.196	0.066	0.013	0.09	0.02	0.266	0.12	0.165
DSW	4	17	-	1.234	0.21	0.073	0.023	0.09	0.02	0.307	0.165	0.172
DSW	4	18	-	1.274	0.216	0.09	0.041	0.09	0.02	0.38	0.235	0.183
DSW	4	19	-	1.284	0.218	0.107	0.033	0.09	0.02	0.426	0.263	0.192
DSW	4	20	-	1.054	0.183	0.107	0.017	0.09	0.09	0.434	0.275	0.199
DSW	4	21	-	0.721	0.133	0.1	0.01	0.09	0.12	0.446	0.253	0.203
DSW	4	22	-	0.346	0.077	0.096	0.007	0.09	-	0.445	0.22	0.206
DSW	4	23	-	0.022	0.028	0.084	0.005	0.09	-	0.385	0.165	0.168
DSW	4	24	-	-	0.025	0.058	0.003	0.09	-	0.288	0.11	0.098
HID	4	1	0.129	-	0.102	0.035	0.002	0.09	0.12	0.221	0.055	0.044
HID	4	2	0.154	-	0.117	0.026	0.002	0.09	0.12	0.199	0.055	0.019
HID	4	3	0.182	-	0.134	0.022	0.002	0.09	0.12	0.191	0.055	0.011
HID	4	4	0.206	-	0.148	0.02	0.002	0.09	0.12	0.188	0.055	0.009
HID	4	5	0.231	-	0.163	0.025	0.002	0.09	0.12	0.191	0.055	0.01
HID	4	6	0.25	-	0.175	0.045	0.003	0.09	0.12	0.214	0.055	0.029
HID	4	7	0.251	-	0.175	0.094	0.006	0.09	0.12	0.277	0.055	0.075
HID	4	8	0.196	-	0.143	0.147	0.009	0.09	0.09	0.32	0.11	0.132
HID	4	9	0.128	-	0.102	0.14	0.009	0.09	0.02	0.296	0.11	0.168
HID	4	10	0.069	-	0.066	0.128	0.009	0.09	0.02	0.281	0.11	0.21
HID	4	11	0.033	-	0.045	0.115	0.009	0.09	0.02	0.272	0.11	0.231
HID	4	12	-	-	0.025	0.099	0.011	0.09	0.02	0.266	0.11	0.227
HID	4	13	-	-	0.025	0.087	0.012	0.09	0.02	0.26	0.11	0.206
HID	4	14	-	-	0.025	0.078	0.01	0.09	0.02	0.251	0.11	0.192
HID	4	15	-	-	0.025	0.068	0.01	0.09	0.02	0.251	0.12	0.171
HID	4	16	-	-	0.025	0.066	0.013	0.09	0.02	0.266	0.12	0.165
HID	4	17	-	-	0.025	0.073	0.023	0.09	0.02	0.307	0.165	0.172
HID	4	18	-	0.007	0.026	0.09	0.041	0.09	0.02	0.38	0.235	0.183
HID	4	19	-	0.013	0.027	0.107	0.033	0.09	0.02	0.426	0.263	0.192
HID	4	20	-	-	0.025	0.107	0.017	0.09	0.09	0.434	0.275	0.199
HID	4	21	-	-	0.025	0.1	0.01	0.09	0.12	0.446	0.253	0.203
HID	4	22	-	-	0.025	0.096	0.007	0.09	-	0.445	0.22	0.206
HID	4	23	0.03	-	0.043	0.084	0.005	0.09	-	0.385	0.165	0.168
HID	4	24	0.089	-	0.078	0.058	0.003	0.09	-	0.288	0.11	0.098
NWC	5	1	1.252	-	0.24	0.141	0.008	0.08	-	0.252	0.06	0.044
NWC	5	2	1.335	-	0.254	0.107	0.007	0.08	-	0.228	0.06	0.019
NWC	5	3	1.435	-	0.271	0.09	0.007	0.08	-	0.222	0.06	0.012
NWC	5	4	1.516	-	0.285	0.084	0.007	0.08	-	0.216	0.06	0.009
NWC	5	5	1.604	-	0.3	0.101	0.007	0.08	-	0.222	0.06	0.011
NWC	5	6	1.671	-	0.312	0.191	0.012	0.08	-	0.252	0.06	0.03
NWC	5	7	1.674	-	0.312	0.416	0.024	0.08	-	0.348	0.06	0.076
NWC	5	8	1.483	-	0.279	0.675	0.038	0.08	-	0.414	0.12	0.132
NWC	5	9	1.244	-	0.238	0.619	0.034	0.08	-	0.366	0.12	0.168
NWC	5	10	1.036	-	0.203	0.529	0.032	0.08	-	0.336	0.12	0.21
NWC	5	11	0.91	-	0.181	0.461	0.034	0.08	-	0.318	0.12	0.23
NWC	5	12	0.765	-	0.156	0.399	0.044	0.08	-	0.306	0.12	0.227
NWC	5	13	0.567	-	0.122	0.349	0.047	0.08	-	0.294	0.12	0.205
NWC	5	14	0.351	-	0.085	0.309	0.04	0.08	-	0.282	0.12	0.191
NWC	5	15	0.201	-	0.059	0.27	0.039	0.08	-	0.282	0.12	0.17
NWC	5	16	0.085	-	0.04	0.264	0.054	0.08	-	0.306	0.12	0.165
NWC	5	17	0.057	-	0.035	0.304	0.104	0.08	-	0.378	0.18	0.173
NWC	5	18	0.083	-	0.039	0.383	0.182	0.08	-	0.504	0.24	0.184
NWC	5	19	0.137	-	0.048	0.467	0.137	0.08	-	0.582	0.276	0.193
NWC	5	20	0.309	-	0.078	0.461	0.066	0.08	-	0.588	0.3	0.2
NWC	5	21	0.549	-	0.119	0.416	0.038	0.08	-	0.576	0.276	0.203
NWC	5	22	0.791	-	0.161	0.383	0.026	0.08	-	0.534	0.24	0.206
NWC	5	23	0.993	-	0.195	0.321	0.017	0.08	-	0.444	0.18	0.168
NWC	5	24	1.137	-	0.22	0.225	0.011	0.08	-	0.33	0.12	0.099
NWV	5	1	1.284	-	0.282	0.113	0.006	0.08	-	0.252	0.06	0.044
NWV	5	2	1.354	-	0.296	0.086	0.005	0.08	-	0.228	0.06	0.019
NWV	5	3	1.44	-	0.313	0.072	0.005	0.08	-	0.222	0.06	0.012
NWV	5	4	1.509	-	0.327	0.068	0.005	0.08	-	0.216	0.06	0.009
NWV	5	5	1.584	-	0.342	0.081	0.005	0.08	-	0.222	0.06	0.011
NWV	5	6	1.643	-	0.354	0.153	0.01	0.08	-	0.252	0.06	0.03
NWV	5	7	1.645	-	0.354	0.333	0.019	0.08	-	0.348	0.06	0.076
NWV	5	8	1.481	-	0.321	0.54	0.03	0.08	-	0.414	0.12	0.132
NWV	5	9	1.276	-	0.28	0.495	0.027	0.08	-	0.366	0.12	0.168
NWV	5	10	1.098	-	0.245	0.423	0.026	0.08	-	0.336	0.12	0.21
NWV	5	11	0.99	-	0.223	0.369	0.027	0.08	-	0.318	0.12	0.23
NWV	5	12	0.866	-	0.198	0.32	0.035	0.08	-	0.306	0.12	0.227
NWV	5	13	0.696	-	0.164	0.279	0.038	0.08	-	0.294	0.12	0.205
NWV	5	14	0.511	-	0.127	0.248	0.032	0.08	-	0.282	0.12	0.191
NWV	5	15	0.382	-	0.101	0.216	0.031	0.08	-	0.282	0.12	0.17
NWV	5	16	0.283	-	0.082	0.212	0.043	0.08	-	0.306	0.12	0.165
NWV	5	17	0.258	-	0.077	0.243	0.083	0.08	-	0.378	0.18	0.173
NWV	5	18	0.281	-	0.081	0.306	0.145	0.08	-	0.504	0.24	0.184
NWV	5	19	0.327	-	0.09	0.374	0.109	0.08	-	0.582	0.276	0.193
NWV	5	20	0.475	-	0.12	0.369	0.053	0.08	-	0.588	0.3	0.2
NWV	5	21	0.68	-	0.161	0.333	0.031	0.08	-	0.576	0.276	0.203
NWV	5	22	0.888	-	0.203	0.306	0.02	0.08	-	0.534	0.24	0.206
NWV	5	23	1.061	-	0.237	0.257	0.013	0.08	-	0.444	0.18	0.168
NWV	5	24	1.185	-	0.262	0.18	0.008	0.08	-	0.33	0.12	0.099

Climate	Day	Hour	Heating	Cooling	Vent	WaterHeat	Cooking	Refrig	ExtLight	IntLight	Electronics	Appliances
NWI	5	1	2.434	-	0.414	0.141	0.008	0.08	-	0.252	0.06	0.044
NWI	5	2	2.535	-	0.431	0.107	0.007	0.08	-	0.228	0.06	0.019
NWI	5	3	2.657	-	0.45	0.09	0.007	0.08	-	0.222	0.06	0.012
NWI	5	4	2.756	-	0.466	0.084	0.007	0.08	-	0.216	0.06	0.009
NWI	5	5	2.864	-	0.483	0.101	0.007	0.08	-	0.222	0.06	0.011
NWI	5	6	2.947	-	0.496	0.191	0.012	0.08	-	0.252	0.06	0.03
NWI	5	7	2.95	-	0.497	0.416	0.024	0.08	-	0.348	0.06	0.076
NWI	5	8	2.716	-	0.46	0.675	0.038	0.08	-	0.414	0.12	0.132
NWI	5	9	2.423	-	0.413	0.619	0.034	0.08	-	0.366	0.12	0.168
NWI	5	10	2.169	-	0.372	0.529	0.032	0.08	-	0.336	0.12	0.21
NWI	5	11	2.014	-	0.347	0.461	0.034	0.08	-	0.318	0.12	0.23
NWI	5	12	1.837	-	0.319	0.399	0.044	0.08	-	0.306	0.12	0.227
NWI	5	13	1.594	-	0.28	0.349	0.047	0.08	-	0.294	0.12	0.205
NWI	5	14	1.33	-	0.238	0.309	0.04	0.08	-	0.282	0.12	0.191
NWI	5	15	1.146	-	0.208	0.27	0.039	0.08	-	0.282	0.12	0.17
NWI	5	16	1.004	-	0.186	0.264	0.054	0.08	-	0.306	0.12	0.165
NWI	5	17	0.969	-	0.18	0.304	0.104	0.08	-	0.378	0.18	0.173
NWI	5	18	1.002	-	0.185	0.383	0.182	0.08	-	0.504	0.24	0.184
NWI	5	19	1.068	-	0.196	0.467	0.137	0.08	-	0.582	0.276	0.193
NWI	5	20	1.279	-	0.23	0.461	0.066	0.08	-	0.588	0.3	0.2
NWI	5	21	1.572	-	0.276	0.416	0.038	0.08	-	0.576	0.276	0.203
NWI	5	22	1.869	-	0.324	0.383	0.026	0.08	-	0.534	0.24	0.206
NWI	5	23	2.115	-	0.363	0.321	0.017	0.08	-	0.444	0.18	0.168
NWI	5	24	2.293	-	0.392	0.225	0.011	0.08	-	0.33	0.12	0.099
RMN	5	1	1.622	-	0.414	0.038	0.002	0.08	-	0.252	0.06	0.044
RMN	5	2	1.69	-	0.431	0.029	0.002	0.08	-	0.228	0.06	0.019
RMN	5	3	1.771	-	0.45	0.024	0.002	0.08	-	0.222	0.06	0.012
RMN	5	4	1.837	-	0.466	0.023	0.002	0.08	-	0.216	0.06	0.009
RMN	5	5	1.909	-	0.483	0.027	0.002	0.08	-	0.222	0.06	0.011
RMN	5	6	1.964	-	0.496	0.051	0.003	0.08	-	0.252	0.06	0.03
RMN	5	7	1.967	-	0.497	0.111	0.006	0.08	-	0.348	0.06	0.076
RMN	5	8	1.81	-	0.46	0.18	0.01	0.08	-	0.414	0.12	0.132
RMN	5	9	1.616	-	0.413	0.165	0.009	0.08	-	0.366	0.12	0.168
RMN	5	10	1.446	-	0.372	0.141	0.009	0.08	-	0.336	0.12	0.21
RMN	5	11	1.343	-	0.347	0.123	0.009	0.08	-	0.318	0.12	0.23
RMN	5	12	1.225	-	0.319	0.107	0.012	0.08	-	0.306	0.12	0.227
RMN	5	13	1.063	-	0.28	0.093	0.013	0.08	-	0.294	0.12	0.205
RMN	5	14	0.887	-	0.238	0.083	0.011	0.08	-	0.282	0.12	0.191
RMN	5	15	0.764	-	0.208	0.072	0.01	0.08	-	0.282	0.12	0.17
RMN	5	16	0.669	-	0.186	0.071	0.014	0.08	-	0.306	0.12	0.165
RMN	5	17	0.646	-	0.18	0.081	0.028	0.08	-	0.378	0.18	0.173
RMN	5	18	0.668	-	0.185	0.102	0.048	0.08	-	0.504	0.24	0.184
RMN	5	19	0.712	-	0.196	0.125	0.036	0.08	-	0.582	0.276	0.193
RMN	5	20	0.853	-	0.23	0.123	0.018	0.08	-	0.588	0.3	0.2
RMN	5	21	1.048	-	0.276	0.111	0.01	0.08	-	0.576	0.276	0.203
RMN	5	22	1.246	-	0.324	0.102	0.007	0.08	-	0.534	0.24	0.206
RMN	5	23	1.41	-	0.363	0.086	0.004	0.08	-	0.444	0.18	0.168
RMN	5	24	1.529	-	0.392	0.06	0.003	0.08	-	0.33	0.12	0.099
NCC	5	1	0.523	-	0.182	0.038	0.002	0.08	-	0.252	0.06	0.044
NCC	5	2	0.564	-	0.194	0.029	0.002	0.08	-	0.228	0.06	0.019
NCC	5	3	0.613	-	0.209	0.024	0.002	0.08	-	0.222	0.06	0.012
NCC	5	4	0.652	-	0.221	0.023	0.002	0.08	-	0.216	0.06	0.009
NCC	5	5	0.695	-	0.234	0.027	0.002	0.08	-	0.222	0.06	0.011
NCC	5	6	0.729	-	0.244	0.051	0.003	0.08	-	0.252	0.06	0.03
NCC	5	7	0.73	-	0.244	0.111	0.006	0.08	-	0.348	0.06	0.076
NCC	5	8	0.636	-	0.216	0.18	0.01	0.08	-	0.414	0.12	0.132
NCC	5	9	0.519	-	0.181	0.165	0.009	0.08	-	0.366	0.12	0.168
NCC	5	10	0.418	-	0.15	0.141	0.009	0.08	-	0.336	0.12	0.21
NCC	5	11	0.356	-	0.132	0.123	0.009	0.08	-	0.318	0.12	0.23
NCC	5	12	0.285	-	0.11	0.107	0.012	0.08	-	0.306	0.12	0.227
NCC	5	13	0.188	-	0.081	0.093	0.013	0.08	-	0.294	0.12	0.205
NCC	5	14	0.082	-	0.05	0.083	0.011	0.08	-	0.282	0.12	0.191
NCC	5	15	0.008	-	0.027	0.072	0.01	0.08	-	0.282	0.12	0.17
NCC	5	16	-	-	0.025	0.071	0.014	0.08	-	0.306	0.12	0.165
NCC	5	17	-	-	0.025	0.081	0.028	0.08	-	0.378	0.18	0.173
NCC	5	18	-	-	0.025	0.102	0.048	0.08	-	0.504	0.24	0.184
NCC	5	19	-	-	0.025	0.125	0.036	0.08	-	0.582	0.276	0.193
NCC	5	20	0.062	-	0.043	0.123	0.018	0.08	-	0.588	0.3	0.2
NCC	5	21	0.179	-	0.079	0.111	0.01	0.08	-	0.576	0.276	0.203
NCC	5	22	0.298	-	0.114	0.102	0.007	0.08	-	0.534	0.24	0.206
NCC	5	23	0.396	-	0.144	0.086	0.004	0.08	-	0.444	0.18	0.168
NCC	5	24	0.467	-	0.165	0.06	0.003	0.08	-	0.33	0.12	0.099
NCV	5	1	0.463	-	0.164	0.038	0.002	0.08	-	0.252	0.06	0.044
NCV	5	2	0.504	-	0.176	0.029	0.002	0.08	-	0.228	0.06	0.019
NCV	5	3	0.553	-	0.191	0.024	0.002	0.08	-	0.222	0.06	0.012
NCV	5	4	0.592	-	0.203	0.023	0.002	0.08	-	0.216	0.06	0.009
NCV	5	5	0.635	-	0.216	0.027	0.002	0.08	-	0.222	0.06	0.011
NCV	5	6	0.669	-	0.226	0.051	0.003	0.08	-	0.252	0.06	0.03
NCV	5	7	0.67	-	0.226	0.111	0.006	0.08	-	0.348	0.06	0.076
NCV	5	8	0.576	-	0.198	0.18	0.01	0.08	-	0.414	0.12	0.132
NCV	5	9	0.459	-	0.163	0.165	0.009	0.08	-	0.366	0.12	0.168
NCV	5	10	0.358	-	0.132	0.141	0.009	0.08	-	0.336	0.12	0.21
NCV	5	11	0.296	-	0.114	0.123	0.009	0.08	-	0.318	0.12	0.23
NCV	5	12	0.225	-	0.092	0.107	0.012	0.08	-	0.306	0.12	0.227
NCV	5	13	0.128	-	0.063	0.093	0.013	0.08	-	0.294	0.12	0.205
NCV	5	14	0.022	-	0.032	0.083	0.011	0.08	-	0.282	0.12	0.191
NCV	5	15	-	-	0.025	0.072	0.01	0.08	-	0.282	0.12	0.17
NCV	5	16	-	-	0.025	0.071	0.014	0.08	-	0.306	0.12	0.165
NCV	5	17	-	-	0.025	0.081	0.028	0.08	-	0.378	0.18	0.173
NCV	5	18	-	-	0.025	0.102	0.048	0.08	-	0.504	0.24	0.184
NCV	5	19	-	-	0.025	0.125	0.036	0.08	-	0.582	0.276	0.193
NCV	5	20	0.002	-	0.025	0.123	0.018	0.08	-	0.588	0.3	0.2
NCV	5	21	0.119	-	0.061	0.111	0.01	0.08	-	0.576	0.276	0.203
NCV	5	22	0.238	-	0.096	0.102	0.007	0.08	-	0.534	0.24	0.206
NCV	5	23	0.336	-	0.126	0.086	0.004	0.08	-	0.444	0.18	0.168

Climate	Day	Hour	Heating	Cooling	Vent	WaterHeat	Cooking	Refrig	ExtLight	IntLight	Electronics	Appliances
NCV	5	24	0.407	-	0.147	0.06	0.003	0.08	-	0.33	0.12	0.099
NCI	5	1	0.583	-	0.2	0.038	0.002	0.08	-	0.252	0.06	0.044
NCI	5	2	0.624	-	0.212	0.029	0.002	0.08	-	0.228	0.06	0.019
NCI	5	3	0.673	-	0.227	0.024	0.002	0.08	-	0.222	0.06	0.012
NCI	5	4	0.712	-	0.239	0.023	0.002	0.08	-	0.216	0.06	0.009
NCI	5	5	0.755	-	0.252	0.027	0.002	0.08	-	0.222	0.06	0.011
NCI	5	6	0.789	-	0.262	0.051	0.003	0.08	-	0.252	0.06	0.03
NCI	5	7	0.79	-	0.262	0.111	0.006	0.08	-	0.348	0.06	0.076
NCI	5	8	0.696	-	0.234	0.18	0.01	0.08	-	0.414	0.12	0.132
NCI	5	9	0.579	-	0.199	0.165	0.009	0.08	-	0.366	0.12	0.168
NCI	5	10	0.478	-	0.168	0.141	0.009	0.08	-	0.336	0.12	0.21
NCI	5	11	0.416	-	0.15	0.123	0.009	0.08	-	0.318	0.12	0.23
NCI	5	12	0.345	-	0.128	0.107	0.012	0.08	-	0.306	0.12	0.227
NCI	5	13	0.248	-	0.099	0.093	0.013	0.08	-	0.294	0.12	0.205
NCI	5	14	0.142	-	0.068	0.083	0.011	0.08	-	0.282	0.12	0.191
NCI	5	15	0.068	-	0.045	0.072	0.01	0.08	-	0.282	0.12	0.17
NCI	5	16	0.012	-	0.028	0.071	0.014	0.08	-	0.306	0.12	0.165
NCI	5	17	-	-	0.025	0.081	0.028	0.08	-	0.378	0.18	0.173
NCI	5	18	0.011	-	0.028	0.102	0.048	0.08	-	0.504	0.24	0.184
NCI	5	19	0.037	-	0.036	0.125	0.036	0.08	-	0.582	0.276	0.193
NCI	5	20	0.122	-	0.061	0.123	0.018	0.08	-	0.588	0.3	0.2
NCI	5	21	0.239	-	0.097	0.111	0.01	0.08	-	0.576	0.276	0.203
NCI	5	22	0.358	-	0.132	0.102	0.007	0.08	-	0.534	0.24	0.206
NCI	5	23	0.456	-	0.162	0.086	0.004	0.08	-	0.444	0.18	0.168
NCI	5	24	0.527	-	0.183	0.06	0.003	0.08	-	0.33	0.12	0.099
SCC	5	1	0.323	-	0.154	0.038	0.002	0.08	-	0.252	0.06	0.044
SCC	5	2	0.355	-	0.167	0.029	0.002	0.08	-	0.228	0.06	0.019
SCC	5	3	0.392	-	0.182	0.024	0.002	0.08	-	0.222	0.06	0.012
SCC	5	4	0.422	-	0.194	0.023	0.002	0.08	-	0.216	0.06	0.009
SCC	5	5	0.454	-	0.207	0.027	0.002	0.08	-	0.222	0.06	0.011
SCC	5	6	0.479	-	0.217	0.051	0.003	0.08	-	0.252	0.06	0.03
SCC	5	7	0.48	-	0.217	0.111	0.006	0.08	-	0.348	0.06	0.076
SCC	5	8	0.41	-	0.189	0.18	0.01	0.08	-	0.414	0.12	0.132
SCC	5	9	0.322	-	0.154	0.165	0.009	0.08	-	0.366	0.12	0.168
SCC	5	10	0.246	-	0.123	0.141	0.009	0.08	-	0.336	0.12	0.21
SCC	5	11	0.199	-	0.105	0.123	0.009	0.08	-	0.318	0.12	0.23
SCC	5	12	0.146	-	0.083	0.107	0.012	0.08	-	0.306	0.12	0.227
SCC	5	13	0.073	-	0.054	0.093	0.013	0.08	-	0.294	0.12	0.205
SCC	5	14	-	-	0.025	0.083	0.011	0.08	-	0.282	0.12	0.191
SCC	5	15	-	-	0.025	0.072	0.01	0.08	-	0.282	0.12	0.17
SCC	5	16	-	-	0.025	0.071	0.014	0.08	-	0.306	0.12	0.165
SCC	5	17	-	-	0.025	0.081	0.028	0.08	-	0.378	0.18	0.173
SCC	5	18	-	-	0.025	0.102	0.048	0.08	-	0.504	0.24	0.184
SCC	5	19	-	-	0.025	0.125	0.036	0.08	-	0.582	0.276	0.193
SCC	5	20	-	-	0.025	0.123	0.018	0.08	-	0.588	0.3	0.2
SCC	5	21	-	-	0.025	0.111	0.01	0.08	-	0.576	0.276	0.203
SCC	5	22	0.102	-	0.066	0.102	0.007	0.08	-	0.534	0.24	0.206
SCC	5	23	0.196	-	0.103	0.086	0.004	0.08	-	0.444	0.18	0.168
SCC	5	24	0.272	-	0.134	0.06	0.003	0.08	-	0.33	0.12	0.099
SCV	5	1	0.377	-	0.176	0.038	0.002	0.08	-	0.252	0.06	0.044
SCV	5	2	0.415	-	0.191	0.029	0.002	0.08	-	0.228	0.06	0.019
SCV	5	3	0.457	-	0.208	0.024	0.002	0.08	-	0.222	0.06	0.012
SCV	5	4	0.492	-	0.222	0.023	0.002	0.08	-	0.216	0.06	0.009
SCV	5	5	0.53	-	0.237	0.027	0.002	0.08	-	0.222	0.06	0.011
SCV	5	6	0.559	-	0.249	0.051	0.003	0.08	-	0.252	0.06	0.03
SCV	5	7	0.56	-	0.249	0.111	0.006	0.08	-	0.348	0.06	0.076
SCV	5	8	0.478	-	0.216	0.18	0.01	0.08	-	0.414	0.12	0.132
SCV	5	9	0.376	-	0.175	0.165	0.009	0.08	-	0.366	0.12	0.168
SCV	5	10	0.287	-	0.14	0.141	0.009	0.08	-	0.336	0.12	0.21
SCV	5	11	0.233	-	0.118	0.123	0.009	0.08	-	0.318	0.12	0.23
SCV	5	12	0.17	-	0.093	0.107	0.012	0.08	-	0.306	0.12	0.227
SCV	5	13	0.085	-	0.059	0.093	0.013	0.08	-	0.294	0.12	0.205
SCV	5	14	-	-	0.025	0.083	0.011	0.08	-	0.282	0.12	0.191
SCV	5	15	-	-	0.025	0.072	0.01	0.08	-	0.282	0.12	0.17
SCV	5	16	-	-	0.025	0.071	0.014	0.08	-	0.306	0.12	0.165
SCV	5	17	-	-	0.025	0.081	0.028	0.08	-	0.378	0.18	0.173
SCV	5	18	-	-	0.025	0.102	0.048	0.08	-	0.504	0.24	0.184
SCV	5	19	-	-	0.025	0.125	0.036	0.08	-	0.582	0.276	0.193
SCV	5	20	-	-	0.025	0.123	0.018	0.08	-	0.588	0.3	0.2
SCV	5	21	-	-	0.025	0.111	0.01	0.08	-	0.576	0.276	0.203
SCV	5	22	0.119	-	0.072	0.102	0.007	0.08	-	0.534	0.24	0.206
SCV	5	23	0.229	-	0.116	0.086	0.004	0.08	-	0.444	0.18	0.168
SCV	5	24	0.317	-	0.152	0.06	0.003	0.08	-	0.33	0.12	0.099
SCI	5	1	0.403	-	0.186	0.038	0.002	0.08	-	0.252	0.06	0.044
SCI	5	2	0.441	-	0.201	0.029	0.002	0.08	-	0.228	0.06	0.019
SCI	5	3	0.484	-	0.218	0.024	0.002	0.08	-	0.222	0.06	0.012
SCI	5	4	0.518	-	0.232	0.023	0.002	0.08	-	0.216	0.06	0.009
SCI	5	5	0.556	-	0.247	0.027	0.002	0.08	-	0.222	0.06	0.011
SCI	5	6	0.585	-	0.259	0.051	0.003	0.08	-	0.252	0.06	0.03
SCI	5	7	0.586	-	0.259	0.111	0.006	0.08	-	0.348	0.06	0.076
SCI	5	8	0.504	-	0.227	0.18	0.01	0.08	-	0.414	0.12	0.132
SCI	5	9	0.402	-	0.186	0.165	0.009	0.08	-	0.366	0.12	0.168
SCI	5	10	0.313	-	0.15	0.141	0.009	0.08	-	0.336	0.12	0.21
SCI	5	11	0.259	-	0.129	0.123	0.009	0.08	-	0.318	0.12	0.23
SCI	5	12	0.197	-	0.104	0.107	0.012	0.08	-	0.306	0.12	0.227
SCI	5	13	0.112	-	0.07	0.093	0.013	0.08	-	0.294	0.12	0.205
SCI	5	14	0.019	-	0.033	0.083	0.011	0.08	-	0.282	0.12	0.191
SCI	5	15	-	-	0.025	0.072	0.01	0.08	-	0.282	0.12	0.17
SCI	5	16	-	-	0.025	0.071	0.014	0.08	-	0.306	0.12	0.165
SCI	5	17	-	-	0.025	0.081	0.028	0.08	-	0.378	0.18	0.173
SCI	5	18	-	-	0.025	0.102	0.048	0.08	-	0.504	0.24	0.184
SCI	5	19	-	-	0.025	0.125	0.036	0.08	-	0.582	0.276	0.193
SCI	5	20	-	-	0.025	0.123	0.018	0.08	-	0.588	0.3	0.2
SCI	5	21	0.025	-	0.035	0.111	0.01	0.08	-	0.576	0.276	0.203
SCI	5	22	0.145	-	0.083	0.102	0.007	0.08	-	0.534	0.24	0.206

Climate	Day	Hour	Heating	Cooling	Vent	WaterHeat	Cooking	Refrig	ExtLight	IntLight	Electronics	Appliances
SCI	5	23	0.255	-	0.127	0.086	0.004	0.08	-	0.444	0.18	0.168
SCI	5	24	0.343	-	0.162	0.06	0.003	0.08	-	0.33	0.12	0.099
DSW	5	1	-	-	0.025	0.038	0.002	0.08	-	0.252	0.06	0.044
DSW	5	2	-	-	0.025	0.029	0.002	0.08	-	0.228	0.06	0.019
DSW	5	3	-	-	0.025	0.024	0.002	0.08	-	0.222	0.06	0.012
DSW	5	4	-	-	0.025	0.023	0.002	0.08	-	0.216	0.06	0.009
DSW	5	5	-	-	0.025	0.027	0.002	0.08	-	0.222	0.06	0.011
DSW	5	6	-	-	0.025	0.051	0.003	0.08	-	0.252	0.06	0.03
DSW	5	7	-	-	0.025	0.111	0.006	0.08	-	0.348	0.06	0.076
DSW	5	8	-	-	0.025	0.18	0.01	0.08	-	0.414	0.12	0.132
DSW	5	9	-	-	0.025	0.165	0.009	0.08	-	0.366	0.12	0.168
DSW	5	10	-	-	0.025	0.141	0.009	0.08	-	0.336	0.12	0.21
DSW	5	11	-	-	0.025	0.123	0.009	0.08	-	0.318	0.12	0.23
DSW	5	12	-	-	0.025	0.107	0.012	0.08	-	0.306	0.12	0.227
DSW	5	13	-	-	0.025	0.093	0.013	0.08	-	0.294	0.12	0.205
DSW	5	14	-	-	0.025	0.083	0.011	0.08	-	0.282	0.12	0.191
DSW	5	15	-	-	0.025	0.072	0.01	0.08	-	0.282	0.12	0.17
DSW	5	16	-	-	0.025	0.071	0.014	0.08	-	0.306	0.12	0.165
DSW	5	17	-	-	0.025	0.081	0.028	0.08	-	0.378	0.18	0.173
DSW	5	18	-	0.011	0.027	0.102	0.048	0.08	-	0.504	0.24	0.184
DSW	5	19	-	0.02	0.028	0.125	0.036	0.08	-	0.582	0.276	0.193
DSW	5	20	-	-	0.025	0.123	0.018	0.08	-	0.588	0.3	0.2
DSW	5	21	-	-	0.025	0.111	0.01	0.08	-	0.576	0.276	0.203
DSW	5	22	-	-	0.025	0.102	0.007	0.08	-	0.534	0.24	0.206
DSW	5	23	-	-	0.025	0.086	0.004	0.08	-	0.444	0.18	0.168
DSW	5	24	-	-	0.025	0.06	0.003	0.08	-	0.33	0.12	0.099
HID	5	1	0.718	-	0.312	0.038	0.002	0.08	-	0.252	0.06	0.044
HID	5	2	0.756	-	0.327	0.029	0.002	0.08	-	0.228	0.06	0.019
HID	5	3	0.799	-	0.344	0.024	0.002	0.08	-	0.222	0.06	0.012
HID	5	4	0.833	-	0.358	0.023	0.002	0.08	-	0.216	0.06	0.009
HID	5	5	0.871	-	0.373	0.027	0.002	0.08	-	0.222	0.06	0.011
HID	5	6	0.9	-	0.385	0.051	0.003	0.08	-	0.252	0.06	0.03
HID	5	7	0.901	-	0.385	0.111	0.006	0.08	-	0.348	0.06	0.076
HID	5	8	0.819	-	0.353	0.18	0.01	0.08	-	0.414	0.12	0.132
HID	5	9	0.717	-	0.312	0.165	0.009	0.08	-	0.366	0.12	0.168
HID	5	10	0.628	-	0.276	0.141	0.009	0.08	-	0.336	0.12	0.21
HID	5	11	0.574	-	0.255	0.123	0.009	0.08	-	0.318	0.12	0.23
HID	5	12	0.512	-	0.23	0.107	0.012	0.08	-	0.306	0.12	0.227
HID	5	13	0.427	-	0.196	0.093	0.013	0.08	-	0.294	0.12	0.205
HID	5	14	0.334	-	0.159	0.083	0.011	0.08	-	0.282	0.12	0.191
HID	5	15	0.27	-	0.133	0.072	0.01	0.08	-	0.282	0.12	0.17
HID	5	16	0.22	-	0.113	0.071	0.014	0.08	-	0.306	0.12	0.165
HID	5	17	0.192	-	0.102	0.081	0.028	0.08	-	0.378	0.18	0.173
HID	5	18	0.18	-	0.097	0.102	0.048	0.08	-	0.504	0.24	0.184
HID	5	19	0.177	-	0.096	0.125	0.036	0.08	-	0.582	0.276	0.193
HID	5	20	0.24	-	0.121	0.123	0.018	0.08	-	0.588	0.3	0.2
HID	5	21	0.34	-	0.161	0.111	0.01	0.08	-	0.576	0.276	0.203
HID	5	22	0.46	-	0.209	0.102	0.007	0.08	-	0.534	0.24	0.206
HID	5	23	0.57	-	0.253	0.086	0.004	0.08	-	0.444	0.18	0.168
HID	5	24	0.658	-	0.288	0.06	0.003	0.08	-	0.33	0.12	0.099

Appendix B

Commercial Model Data

Table B.1: Commercial load model data example input for Load Model Data Tool Version 2.1. (Note: values are shown in kW but LMDT 2.1 requires values in W.)

Climate	Day	Hour	Heat	Cool	Vent	WH	Cook	Refrig	ExtLight	IntLight	Office	Misc	Proc.	Motors	Comp
NWC	1	1	18	45.5	98.5	6	11.8	150.1	86.2	176.5	76.9	35.1	0.6	24.8	3.2
NWC	1	2	19.8	41.1	98.6	6	10.9	149.8	84.8	175.5	77	34.1	0.6	24.8	3.2
NWC	1	3	19.8	38.7	96.8	6.3	14.5	150	84.2	187.2	78.4	35.7	0.6	26.7	3.7
NWC	1	4	21.1	46.2	103.4	7.3	21.6	151.1	83.3	217.9	81.4	40.2	0.8	32	5.1
NWC	1	5	22.7	53.1	114.9	8.8	36	157.9	83.2	273.6	90.6	48.7	1.7	45.2	7.8
NWC	1	6	29.5	66.8	152.3	11	49.2	159.9	11.3	372.2	112.4	62.9	2.2	60.8	11
NWC	1	7	39.9	99.3	194.1	13.1	61.5	162.3	5.3	483.5	137.1	78.5	2.9	78.7	14.9
NWC	1	8	40.9	129.1	220.8	14.8	71.4	164.4	2.5	558.7	158.2	90.7	3.7	88.7	17.1
NWC	1	9	36.9	153.5	231.6	15.5	79.7	171.3	1.8	591.5	170.5	97.1	4.6	92.7	18
NWC	1	10	33.3	205.3	236.4	15.7	86.6	173.1	1.8	603.6	176.4	100	4.9	94	18.3
NWC	1	11	30.6	243.2	238.8	16.1	92.9	174.9	1.8	602.2	177.8	101	4.9	94.4	18.4
NWC	1	12	27.8	286.6	240.6	16.1	97.3	181	1.8	602.2	177.7	101.1	4.9	94.1	18.3
NWC	1	13	24.5	310.3	241.4	15.8	91.1	181.7	1.8	601.1	175.8	100.9	4.9	93.5	18.3
NWC	1	14	23.9	327.4	243.5	15.6	86.3	186.8	1.9	596.2	172.1	99.8	4.9	90.3	17.5
NWC	1	15	23.6	337.5	243.7	15.3	86.4	186.4	2.9	581.1	164.1	97	4.8	86.1	16.1
NWC	1	16	22.8	337.8	244	14.2	88.7	180.2	4.9	555.4	149.7	91.7	4.7	79	14
NWC	1	17	22.8	321.5	230.6	12.9	88.4	178.6	24	511.7	129.3	82.9	4.4	67.9	10.8
NWC	1	18	19.9	255.1	200.4	11.4	83.4	171.8	43.4	444	105.6	73.4	4	58.7	7.9
NWC	1	19	14.1	171.7	167	10.2	74	169.4	47.5	392.4	91.9	66.7	3.6	51.6	6
NWC	1	20	14.2	129.9	145	9.2	60.2	166.8	114.6	344.7	85.3	61.1	3	45.3	5
NWC	1	21	15.1	89.7	133.7	8.1	48.1	159.9	113.2	289.1	81.7	53.5	2.2	40.4	4.4
NWC	1	22	15.1	61.8	113.3	7.2	35.2	158.5	107.4	242.4	79.6	48.1	1.6	35.3	4
NWC	1	23	16.6	54.2	108.5	6.6	21.3	151.9	106	206.6	78	43.1	1.2	31.4	3.6
NWC	1	24	15.4	42.7	93.3	6.5	13.7	150.8	88.8	181.1	77.2	38.2	0.7	26.1	3.3
NWV	1	1	9.3	35.8	76.5	3	6.7	111	83	101.9	64.8	24.9	3.7	15.3	3.1
NWV	1	2	9.8	31.9	73.9	3	6.3	110.7	79.9	100.6	65.1	24.9	3.7	15.5	3.2
NWV	1	3	11	29.3	72.2	2.9	7.5	110.6	78.4	103.4	66.6	26	3.8	17.3	3.7
NWV	1	4	11.9	32.1	76.5	3.3	10.1	111.2	70.6	121.3	68.2	29.6	3.9	19.9	4.7
NWV	1	5	14.7	32.3	81.2	4.1	15.7	116.7	65.8	160	71.4	36.6	3.9	22.8	6.2
NWV	1	6	16.5	41.2	109.3	5.3	23.8	117.3	7.6	221.2	79.1	45.2	4	27.3	8.5
NWV	1	7	23.8	47.8	126.5	6.6	34.2	119.2	3.7	287.2	92.4	54.5	4.1	34.6	10.8
NWV	1	8	19.8	62.9	144.1	7.8	44	120.9	1.1	342.2	104.1	62.1	4.1	38.3	11.8
NWV	1	9	11.3	94.7	149.8	8.6	53.3	127.5	1.1	367.1	112.1	66.2	4.1	40.3	12.3
NWV	1	10	7.6	124.1	156.2	8.9	65.5	129.5	1.1	372.5	115.9	68.7	4.1	41.4	12.5
NWV	1	11	6.1	162.6	159.2	9.1	75.5	131.3	1.1	375.5	116.7	69.5	4.1	42	12.5
NWV	1	12	5.8	197.5	160.5	9	73.3	137	1.1	375.7	116.9	69.3	4.1	42.1	12.6
NWV	1	13	5.1	232.4	161.6	8.7	67.3	137.7	1.1	373.6	115	68.5	4.1	41.9	12.5
NWV	1	14	4.4	248.6	163.9	8.6	62.2	142.6	1.1	368.9	112.2	67.5	4.1	41.5	12.4
NWV	1	15	4.3	254.5	156.4	8.3	58.3	142.4	1.1	359.4	107.6	65.8	4.1	40.5	11.9
NWV	1	16	4.4	238.7	151.7	7.8	59.9	136.8	2.9	338.6	101.1	62.4	4.1	37.9	10.5
NWV	1	17	4.9	219.6	141.9	7.1	65.5	135.7	7.5	293.9	92	57.9	4.1	35.1	8.9
NWV	1	18	5.4	177.3	127.3	6.2	64.4	129.5	19	259.9	82.7	52.9	4	32.4	7.4
NWV	1	19	4.6	126.1	114.4	5.3	55.5	127.6	40.1	227.6	76.1	47.9	4	29	6.3
NWV	1	20	7.9	86.1	108.8	4.6	45.8	125.7	95.6	207.1	72	43	4	25.3	5.5
NWV	1	21	8	64.5	101.1	3.9	31.7	119.4	92.2	178.5	68.8	38	3.9	22.8	4.9
NWV	1	22	9.2	48.7	90.4	3.4	20.1	118.1	88.8	143	66.9	32.8	3.7	18.5	4.2
NWV	1	23	8.7	40.5	84.6	3.1	12.3	112.5	88	121.2	65.8	29.1	3.7	16.6	3.7
NWV	1	24	8.9	35.8	77.1	3	7.8	111.6	83.5	103.2	65.3	25.9	3.7	15.8	3.3
NWI	1	1	2.1	24.9	39.8	0.9	2.8	107.3	55.8	49.5	11	16.6	0.3	9.8	2
NWI	1	2	1.5	18.6	38.9	0.9	3.1	106.6	55.4	49.6	11.1	16.3	0.3	10.1	2.1
NWI	1	3	1.8	16.6	39.8	0.9	4.6	106.3	55.4	53	11.8	18.2	0.3	11.2	2.7
NWI	1	4	1.8	15.9	42.2	1.3	8	106.6	54.5	68	14.6	24.9	0.5	14.8	4.4
NWI	1	5	1.7	19.1	44.9	1.7	14.4	111.8	54	100.8	20.9	36.2	0.6	20.9	6.5
NWI	1	6	3.9	28.4	57.6	2.1	23.9	112.4	50	157.5	32.9	47.8	0.7	28.2	9.2
NWI	1	7	4.5	40.9	69.6	2.5	29.5	114.5	0.6	209.8	47.2	57.3	0.8	33.4	11.8
NWI	1	8	2.9	76.8	78.8	2.8	32.6	116.9	0.3	244.2	54.8	64.4	0.8	36.4	13.4
NWI	1	9	1.3	113.1	83.2	3	35.3	124.6	0.3	257.8	58.6	68.1	0.8	37.4	14
NWI	1	10	1.2	162.1	87.3	3	37.5	127.2	0.3	265.8	58.5	70	0.8	37.7	14.2
NWI	1	11	0.8	189.4	90.2	3.1	39.4	128.9	0.3	265.8	55.7	70.4	0.8	37.7	14.2
NWI	1	12	0.8	208.6	91.6	3.1	38.4	134.8	0.3	266.4	53.6	70.1	0.8	37.6	14.2

Climate	Day	Hour	Heat	Cool	Vent	WH	Cook	Refrig	ExtLight	IntLight	Office	Misc	Proc.	Motors	Comp
NWI	1	13	0.7	223.4	92.3	3	34.1	135.7	0.3	263	52.2	69.3	0.8	37.3	14.1
NWI	1	14	0.7	237.3	93.6	2.9	31.5	140.5	1.1	256.8	50.6	67.7	0.8	36.3	13.8
NWI	1	15	0.8	247.2	93.6	2.6	29.7	140.1	1.2	248.8	46.9	64.5	0.7	32.8	12.6
NWI	1	16	0.7	241.4	91.7	2.3	28.2	133.7	0.6	229.9	40	59.2	0.6	27.2	10
NWI	1	17	1.1	192	79.1	1.9	26.9	132.6	14.1	200.8	29.5	51.5	0.6	22.3	7.4
NWI	1	18	1.1	138.4	70.2	1.6	25.5	126	25.6	165.3	23	44.5	0.6	19.2	5.6
NWI	1	19	1.1	107	62.1	1.5	23	125.3	82.3	148.2	19.5	39.7	0.5	16.8	4.6
NWI	1	20	1.2	86.7	58.2	1.4	20.1	124.2	80.7	126.5	16.6	34.5	0.4	14.8	3.7
NWI	1	21	1.4	71.1	54.3	1.3	15.3	117.7	79.6	103.7	14.2	29.9	0.3	13.3	3.1
NWI	1	22	1.9	49.4	48.8	1.2	10.1	115.2	69.8	80.9	13.1	25.8	0.4	11.9	2.8
NWI	1	23	2.1	35.8	44.2	1.1	5.5	109.5	62.7	63.2	11.9	21	0.3	10.5	2.4
NWI	1	24	2.2	27.4	40.3	1	3.6	108.3	58	51.6	11.1	18.5	0.3	10.1	2.2
RMN	1	1	9.3	25.1	76.5	3	6.7	111	83	101.9	64.8	24.9	3.7	15.3	3.1
RMN	1	2	9.8	22.3	73.9	3	6.3	110.7	79.9	100.6	65.1	24.9	3.7	15.5	3.2
RMN	1	3	11	20.5	72.2	2.9	7.5	110.6	78.4	103.4	66.6	26	3.8	17.3	3.7
RMN	1	4	11.9	22.5	76.5	3.3	10.1	111.2	70.6	121.3	68.2	29.6	3.9	19.9	4.7
RMN	1	5	14.7	22.6	81.2	4.1	15.7	116.7	65.8	160	71.4	36.6	3.9	22.8	6.2
RMN	1	6	16.5	28.9	109.3	5.3	23.8	117.3	7.6	221.2	79.1	45.2	4	27.3	8.5
RMN	1	7	23.8	33.5	126.5	6.6	34.2	119.2	3.7	287.2	92.4	54.5	4.1	34.6	10.8
RMN	1	8	19.8	44	144.1	7.8	44	120.9	1.1	342.2	104.1	62.1	4.1	38.3	11.8
RMN	1	9	11.3	66.3	149.8	8.6	53.3	127.5	1.1	367.1	112.1	66.2	4.1	40.3	12.3
RMN	1	10	7.6	86.9	156.2	8.9	65.5	129.5	1.1	372.5	115.9	68.7	4.1	41.4	12.5
RMN	1	11	6.1	113.8	159.2	9.1	75.5	131.3	1.1	375.5	116.7	69.5	4.1	42	12.5
RMN	1	12	5.8	138.3	160.5	9	73.3	137	1.1	375.7	116.9	69.3	4.1	42.1	12.6
RMN	1	13	5.1	162.7	161.6	8.7	67.3	137.7	1.1	373.6	115	68.5	4.1	41.9	12.5
RMN	1	14	4.4	174	163.9	8.6	62.2	142.6	1.1	368.9	112.2	67.5	4.1	41.5	12.4
RMN	1	15	4.3	178.1	156.4	8.3	58.3	142.4	1.1	359.4	107.6	65.8	4.1	40.5	11.9
RMN	1	16	4.4	167.1	151.7	7.8	59.9	136.8	2.9	338.6	101.1	62.4	4.1	37.9	10.5
RMN	1	17	4.9	153.7	141.9	7.1	65.5	135.7	7.5	293.9	92	57.9	4.1	35.1	8.9
RMN	1	18	5.4	124.1	127.3	6.2	64.4	129.5	19	259.9	82.7	52.9	4	32.4	7.4
RMN	1	19	4.6	88.3	114.4	5.3	55.5	127.6	40.1	227.6	76.1	47.9	4	29	6.3
RMN	1	20	7.9	60.3	108.8	4.6	45.8	125.7	95.6	207.1	72	43	4	25.3	5.5
RMN	1	21	8	45.1	101.1	3.9	31.7	119.4	92.2	178.5	68.8	38	3.9	22.8	4.9
RMN	1	22	9.2	34.1	90.4	3.4	20.1	118.1	88.8	143	66.9	32.8	3.7	18.5	4.2
RMN	1	23	8.7	28.4	84.6	3.1	12.3	112.5	88	121.2	65.8	29.1	3.7	16.6	3.7
RMN	1	24	8.9	25	77.1	3	7.8	111.6	83.5	103.2	65.3	25.9	3.7	15.8	3.3
NCC	1	1	15.4	66.3	102.1	5.8	11.1	151.3	86.2	177.6	76.7	34.4	0.6	25.2	3.2
NCC	1	2	16.3	60.1	101.5	5.8	10.6	151	84.6	177	76.8	33.6	0.6	25.3	3.3
NCC	1	3	16.8	55.2	100.3	6.1	14.4	151.3	84.2	189.2	78.2	35.6	0.6	27.1	3.7
NCC	1	4	17.9	60.5	105.6	7.1	21.5	152.4	83.3	221.6	81.3	40.3	0.8	32.1	5.1
NCC	1	5	19.4	68.1	116.8	8.6	36.7	159.2	83.2	279.1	90.5	49.2	1.7	45.3	7.8
NCC	1	6	26.2	90.8	154.6	10.8	51.5	160.8	27.1	382.4	112.6	63.6	2.2	61.1	11
NCC	1	7	31.7	139.5	203	12.9	65	163.2	5.3	498.2	137.9	79.4	2.9	79.6	14.9
NCC	1	8	30.6	192.2	226.8	14.7	75	165.6	2.5	572	159.1	91.6	3.8	89.9	17.2
NCC	1	9	27.1	257.1	237	15.8	83.4	172.7	1.8	604.1	171.1	97.9	4.8	94.2	18
NCC	1	10	23.8	324.2	242.5	17.7	90	174.6	1.8	615	176.9	100.7	5.1	95.6	18.4
NCC	1	11	21.2	386.3	245.6	18.5	96.9	176.4	1.8	612.9	178.4	101.6	5.1	96	18.4
NCC	1	12	18.4	440.2	247.5	18.7	100.5	182.8	1.8	613.3	178.4	101.8	5	95.5	18.4
NCC	1	13	16.2	479.6	248.5	18.6	94.1	183.8	1.8	611.2	176.6	101.8	5	94.8	18.3
NCC	1	14	14.6	506.1	250	18.5	88.4	189	1.9	606.5	172.9	100.7	4.9	92.1	17.5
NCC	1	15	14.5	519	250.6	17.9	87.9	188.5	2.9	590.4	165.1	98	4.9	87.8	16.2
NCC	1	16	15	515	250.3	17	89.4	182	4.9	563.9	150.8	92.8	4.8	80.8	14.1
NCC	1	17	16.3	476	240.3	15.7	87.4	180.2	24	520.8	130.4	83.9	4.4	69.7	11
NCC	1	18	15.4	386	208	14.1	81.8	172.9	43.5	453.1	106.5	74.3	4	60.4	8.1
NCC	1	19	10.8	255.8	171.9	12.8	72.1	170.4	63.3	398.9	92.6	67.5	3.6	52.9	6.1
NCC	1	20	11.7	199.8	150.8	11.5	58.2	168.2	114.6	350.8	85.9	61.7	3	46	5
NCC	1	21	12.3	151.9	137.4	10.1	46.6	161.3	113.2	293.3	81.9	54	2.2	40.8	4.4
NCC	1	22	12.8	111.8	119.3	8.6	33	159.7	107.4	245.3	79.5	48.4	1.6	35.5	3.9
NCC	1	23	14.5	91.3	112.2	6.8	20.1	153.1	106	208.1	77.8	42.7	1.2	31.6	3.5
NCC	1	24	14.8	73.7	104.5	6.1	13	151.9	88.8	186.5	76.9	37.1	0.7	26.4	3.3
NCV	1	1	1.7	46.5	41.8	0.9	2.7	106.6	55.8	48.9	10.9	16.4	0.3	9.7	2
NCV	1	2	1.7	39.4	40.4	0.9	3.1	105.9	55.4	49.2	11.1	16.1	0.3	10	2.1
NCV	1	3	1.8	35.1	41.2	1	4.6	105.5	55.4	52.7	11.7	17.9	0.3	11	2.6
NCV	1	4	1.8	32.9	43.4	1.3	7.9	105.7	54.5	67.3	13.9	24.5	0.5	14.7	4.2
NCV	1	5	1.8	38.8	46.8	1.7	14.2	110.8	54	99.3	20.1	35.8	0.6	20.8	6.4
NCV	1	6	2.1	56	57.1	2.2	23	112	19.1	154.3	32.4	47.4	0.7	28	9.1
NCV	1	7	1.8	94.7	72.5	2.6	28.3	114.3	0.6	203.9	45.8	56.6	0.8	33.2	11.8
NCV	1	8	1.5	150.9	82.6	2.9	31	116.7	0.3	236.2	53.4	63.4	0.8	36.1	13.3
NCV	1	9	1.2	208.9	88	3.1	33.4	124.2	0.3	248.1	57.6	66.8	0.8	37	14
NCV	1	10	1	255.5	92.6	3.2	35.6	126.7	0.3	255.7	59.1	68.5	0.8	37.3	14.1
NCV	1	11	0.7	296.3	95.8	3.3	37.3	128.3	0.3	256.4	59	69	0.8	37.3	14.1
NCV	1	12	0.7	331.4	97.7	3.3	36.1	133.8	0.3	257.3	58.4	68.8	0.8	37.2	14.1
NCV	1	13	0.6	357.8	99.2	3.1	32.4	134.4	0.3	254.4	57.6	68.3	0.8	37	14
NCV	1	14	0.6	381.2	100.4	3	30	139	1.1	249.3	55.8	67.1	0.8	36	13.7
NCV	1	15	0.6	393.8	100.7	2.8	28.5	138.3	1.2	242.5	51	63.9	0.7	32.5	12.4
NCV	1	16	0.6	387.4	98.9	2.4	27.1	131.6	0.6	224	41.3	58.6	0.6	26.9	9.8
NCV	1	17	0.7	308.4	86.4	2	25.9	130.6	14.1	194.6	29.6	51	0.6	22	7.2
NCV	1	18	0.9	248.2	75.6	1.7	24.6	124.3	25.6	163.1	22.9	44	0.6	19	5.4
NCV	1	19	1	200.3	67.8	1.5	22.3	124.3	60.2	146.2	19.4	39.3	0.5	16.6	4.4
NCV	1	20	1	160.2	63.4	1.4	19.5	123.2	80.7	125.1	16.5	34.1	0.4	14.7	3.6
NCV	1	21	1.1	127.7	57.4	1.3	14.9	116.8	79.6	103	14.1	29.6	0.3	13.1	3
NCV	1	22	1.3	93.2	50.4	1.3	9.6	114.1	69.8	80.2	13	25.7	0.4	11.8	2.8
NCV	1	23	1.4	73.5	47.5	1.2	5	108.7	62.7	62.5	11.8	20.7	0.3	10.4	2.3
NCV	1	24	1.6	55.9	43.7	1	3.1	107.4	58	51.9	11	18.2	0.3	10	2.1
NCI	1	1	6.3	53.6	79.8	3	5.8	112.1	82.9	102.5	64.7	24.9	3.7	14.5	3.1
NCI	1	2	6.8	46.2	77.4	2.9	6.1	111.7	79.7	101	65	24.7	3.7	14.6	3.2
NCI	1	3	7.4	43.6	76.7	2.8	7.4	111.7	78.4	103.8	66.5	25.8	3.8	16.6	3.7
NCI	1	4	7.9	44.4	77.9	3.1	10	112.3	70.6	121.8	68.2	29.1	3.9	19.6	4.7
NCI	1	5	9	45.3	81.8	3.9	15.5	117.8	65.8	158.8	71.3	36	3.9	22.7	6.4
NCI	1	6	9.6	59.3	104.9	5	23.5	117.6	20.7	217.5	79	44.8	4	27.4	8.8
NCI	1	7	12.3	77.5	129	6.3	33.9	119.1	3.7	288.3	92.4	54	4.1	34.9	11.2
NCI	1	8	10.1	117.8	148.9	7.6	43.7	120.8	1.1	341.1	103.8	61.5	4.1	38.7	12.3
NCI	1	9	7.9	164.8	154.3	8.4	52.8	127.6	1.1	364.3	111.4	65.3	4.1	40.8	12.8
NCI	1	10	6	221.8	160.9	8.7	64.6	130	1.1	370.6	115	67.8	4.1	42.1	13
NCI	1	11	4.7	278.5	163.9	8.8	74	132.1	1.1	373.6	115.9	68.6	4.1	42.7	13

Climate	Day	Hour	Heat	Cool	Vent	WH	Cook	Refrig	ExtLight	IntLight	Office	Misc	Proc.	Motors	Comp
NCI	1	12	4.1	328.1	166.3	8.8	71.6	138.2	1.1	375.1	116.1	68.6	4.1	43	13
NCI	1	13	3.6	368.3	167.7	8.6	65.9	139.2	1.1	375.4	114.4	67.9	4.1	42.8	13
NCI	1	14	3.3	396.4	169.1	8.5	61.1	144.2	1.1	371.8	111.7	67.2	4.1	42.4	12.8
NCI	1	15	3.2	402.3	160.6	8.4	57.9	143.9	1.1	362.9	107.4	65.7	4.1	41.3	12.2
NCI	1	16	3.3	383.4	153.3	8.1	60	138.1	2.9	344.2	101.1	62.6	4.1	38.6	10.7
NCI	1	17	3.5	352.3	148	7.4	65.4	136.8	7.7	301.5	92	58.2	4.1	35.7	9
NCI	1	18	4	280.4	132.4	6.6	63.7	130.3	19	266.8	82.5	53.4	4	32.9	7.4
NCI	1	19	2.7	202.8	116.4	5.8	54.2	128.2	54.5	235.2	76	48.5	4	29.4	6.3
NCI	1	20	5.2	147.5	111.1	5.2	44.3	126.6	95.7	212.4	71.9	43.8	4	25.3	5.5
NCI	1	21	5.5	113.9	105.1	4.5	30.2	120.5	92.2	183.6	68.8	38.8	3.9	22.6	4.9
NCI	1	22	5.8	86.9	93.9	3.9	18.1	119	88.8	146.5	66.9	33.5	3.7	18.3	4.2
NCI	1	23	5.7	70	87	3.4	10.4	113.5	87.8	122.3	65.7	29.3	3.7	16	3.7
NCI	1	24	6.3	57.9	80.8	3	6.7	112.5	83.4	106.2	65.2	26	3.7	15	3.3
SCC	1	1	6.7	65.2	114.2	7.6	11	155.4	141.7	191.2	65.9	33.6	8.3	20.8	4
SCC	1	2	6.9	60.3	109.5	7.4	10.3	154.7	139.5	187.8	65.9	33	8.4	20.4	4
SCC	1	3	7	56.6	107.6	7.4	12.1	154.6	134.4	193.9	67.9	34.4	8.5	20.9	4.4
SCC	1	4	7.7	60.7	118.3	8	18.3	155.8	133.2	227.7	72.1	39.1	8.7	25.9	6
SCC	1	5	8.7	77.6	130.2	10.1	34.6	163	131.5	318.6	85.6	52.3	9.2	43	10.4
SCC	1	6	17.4	117.5	168.9	13.6	52.3	165.6	25.8	441.8	110.6	71.6	10.3	66.6	16.4
SCC	1	7	21.1	169.1	212.5	17.4	64.2	168.5	3.9	577.7	142.3	91.8	12.8	90.2	23.3
SCC	1	8	18.4	226.1	235.6	21	71.1	171.7	3.8	694.5	168.1	106	14.4	104.5	27.4
SCC	1	9	16.3	279.6	250.1	22.8	77.5	179.9	3.8	744.2	184.7	115.3	15.4	109.8	29.4
SCC	1	10	14.2	331	262.3	23.5	86	181.5	3.8	756	191.1	118.5	15.9	112	30.1
SCC	1	11	12.8	358.5	265.2	24.2	91.7	182	3.8	755.1	192.4	121	16	112.4	30.2
SCC	1	12	11.6	374.6	266.4	24.3	90.7	187.1	3.8	757.5	192.1	121.4	16	112.3	30.1
SCC	1	13	10.9	390.7	268.5	23.7	84.7	187.3	3.8	759.1	189.4	119.5	16	111.6	29.8
SCC	1	14	10.2	404.1	270.8	23.2	79.4	192.1	3.8	754.9	184.5	117.8	15.9	107.1	28.2
SCC	1	15	9.9	407.2	267.2	22.1	78.1	191.6	4.4	737.3	174.7	113.7	15.4	99.9	25.7
SCC	1	16	10.1	393.7	261.1	20.6	79.5	185.1	8.3	696.8	158.6	106.1	13.7	86.4	21.2
SCC	1	17	10.9	356.2	249.2	18.7	80.2	183.2	33.3	643.5	133.5	95	12.6	70.9	15.7
SCC	1	18	10.8	275.2	219.3	16.4	73.9	176	79.3	567.3	107.6	81.1	11.6	59.1	11.5
SCC	1	19	11	195.5	185.4	14.5	65	174.3	125.4	497.3	90.6	69.9	10.7	50.8	8.8
SCC	1	20	12.3	153.5	166	12.9	53.3	172.7	169.4	426.9	82	58.9	9.9	44.2	7.3
SCC	1	21	14	127.1	153.3	11.1	41.9	166	168.1	342.9	75.4	50.3	9.2	38.3	6.1
SCC	1	22	14.8	105.6	141.6	9.6	31	164.1	159.7	283.3	71	44.3	8.9	32.3	5
SCC	1	23	6.2	80.5	123.2	8.5	18.2	157.6	153	231	67.8	38.4	8.6	25.5	4.4
SCC	1	24	6.4	70.5	115.4	7.9	13	156.2	146.3	201.7	66.4	35.3	8.4	22.2	4.1
SCV	1	1	6.7	130.4	114.2	7.6	11	155.4	141.7	191.2	65.9	33.6	8.3	20.8	4
SCV	1	2	6.9	120.5	109.5	7.4	10.3	154.7	139.5	187.8	65.9	33	8.4	20.4	4
SCV	1	3	7	113.2	107.6	7.4	12.1	154.6	134.4	193.9	67.9	34.4	8.5	20.9	4.4
SCV	1	4	7.7	121.4	118.3	8	18.3	155.8	133.2	227.7	72.1	39.1	8.7	25.9	6
SCV	1	5	8.7	155.2	130.2	10.1	34.6	163	131.5	318.6	85.6	52.3	9.2	43	10.4
SCV	1	6	17.4	234.9	168.9	13.6	52.3	165.6	25.8	441.8	110.6	71.6	10.3	66.6	16.4
SCV	1	7	21.1	338.2	212.5	17.4	64.2	168.5	3.9	577.7	142.3	91.8	12.8	90.2	23.3
SCV	1	8	18.4	452.1	235.6	21	71.1	171.7	3.8	694.5	168.1	106	14.4	104.5	27.4
SCV	1	9	16.3	559.2	250.1	22.8	77.5	179.9	3.8	744.2	184.7	115.3	15.4	109.8	29.4
SCV	1	10	14.2	661.9	262.3	23.5	86	181.5	3.8	756	191.1	118.5	15.9	112	30.1
SCV	1	11	12.8	717	265.2	24.2	91.7	182	3.8	755.1	192.4	121	16	112.4	30.2
SCV	1	12	11.6	749.1	266.4	24.3	90.7	187.1	3.8	757.5	192.1	121.4	16	112.3	30.1
SCV	1	13	10.9	781.5	268.5	23.7	84.7	187.3	3.8	759.1	189.4	119.5	16	111.6	29.8
SCV	1	14	10.2	808.2	270.8	23.2	79.4	192.1	3.8	754.9	184.5	117.8	15.9	107.1	28.2
SCV	1	15	9.9	814.5	267.2	22.1	78.1	191.6	4.4	737.3	174.7	113.7	15.4	99.9	25.7
SCV	1	16	10.1	787.5	261.1	20.6	79.5	185.1	8.3	696.8	158.6	106.1	13.7	86.4	21.2
SCV	1	17	10.9	712.3	249.2	18.7	80.2	183.2	33.3	643.5	133.5	95	12.6	70.9	15.7
SCV	1	18	10.8	550.3	219.3	16.4	73.9	176	79.3	567.3	107.6	81.1	11.6	59.1	11.5
SCV	1	19	11	391	185.4	14.5	65	174.3	125.4	497.3	90.6	69.9	10.7	50.8	8.8
SCV	1	20	12.3	306.9	166	12.9	53.3	172.7	169.4	426.9	82	58.9	9.9	44.2	7.3
SCV	1	21	14	254.2	153.3	11.1	41.9	166	168.1	342.9	75.4	50.3	9.2	38.3	6.1
SCV	1	22	14.8	211.1	141.6	9.6	31	164.1	159.7	283.3	71	44.3	8.9	32.3	5
SCV	1	23	6.2	161.1	123.2	8.5	18.2	157.6	153	231	67.8	38.4	8.6	25.5	4.4
SCV	1	24	6.4	141	115.4	7.9	13	156.2	146.3	201.7	66.4	35.3	8.4	22.2	4.1
SCI	1	1	6.7	91.3	114.2	7.6	11	155.4	141.7	191.2	65.9	33.6	8.3	20.8	4
SCI	1	2	6.9	84.4	109.5	7.4	10.3	154.7	139.5	187.8	65.9	33	8.4	20.4	4
SCI	1	3	7	79.2	107.6	7.4	12.1	154.6	134.4	193.9	67.9	34.4	8.5	20.9	4.4
SCI	1	4	7.7	85	118.3	8	18.3	155.8	133.2	227.7	72.1	39.1	8.7	25.9	6
SCI	1	5	8.7	108.7	130.2	10.1	34.6	163	131.5	318.6	85.6	52.3	9.2	43	10.4
SCI	1	6	17.4	164.5	168.9	13.6	52.3	165.6	25.8	441.8	110.6	71.6	10.3	66.6	16.4
SCI	1	7	21.1	236.7	212.5	17.4	64.2	168.5	3.9	577.7	142.3	91.8	12.8	90.2	23.3
SCI	1	8	18.4	316.5	235.6	21	71.1	171.7	3.8	694.5	168.1	106	14.4	104.5	27.4
SCI	1	9	16.3	391.4	250.1	22.8	77.5	179.9	3.8	744.2	184.7	115.3	15.4	109.8	29.4
SCI	1	10	14.2	463.4	262.3	23.5	86	181.5	3.8	756	191.1	118.5	15.9	112	30.1
SCI	1	11	12.8	501.9	265.2	24.2	91.7	182	3.8	755.1	192.4	121	16	112.4	30.2
SCI	1	12	11.6	524.4	266.4	24.3	90.7	187.1	3.8	757.5	192.1	121.4	16	112.3	30.1
SCI	1	13	10.9	547	268.5	23.7	84.7	187.3	3.8	759.1	189.4	119.5	16	111.6	29.8
SCI	1	14	10.2	565.8	270.8	23.2	79.4	192.1	3.8	754.9	184.5	117.8	15.9	107.1	28.2
SCI	1	15	9.9	570.1	267.2	22.1	78.1	191.6	4.4	737.3	174.7	113.7	15.4	99.9	25.7
SCI	1	16	10.1	551.2	261.1	20.6	79.5	185.1	8.3	696.8	158.6	106.1	13.7	86.4	21.2
SCI	1	17	10.9	498.6	249.2	18.7	80.2	183.2	33.3	643.5	133.5	95	12.6	70.9	15.7
SCI	1	18	10.8	385.2	219.3	16.4	73.9	176	79.3	567.3	107.6	81.1	11.6	59.1	11.5
SCI	1	19	11	273.7	185.4	14.5	65	174.3	125.4	497.3	90.6	69.9	10.7	50.8	8.8
SCI	1	20	12.3	214.8	166	12.9	53.3	172.7	169.4	426.9	82	58.9	9.9	44.2	7.3
SCI	1	21	14	177.9	153.3	11.1	41.9	166	168.1	342.9	75.4	50.3	9.2	38.3	6.1
SCI	1	22	14.8	147.8	141.6	9.6	31	164.1	159.7	283.3	71	44.3	8.9	32.3	5
SCI	1	23	6.2	112.8	123.2	8.5	18.2	157.6	153	231	67.8	38.4	8.6	25.5	4.4
SCI	1	24	6.4	98.7	115.4	7.9	13	156.2	146.3	201.7	66.4	35.3	8.4	22.2	4.1
DSW	1	1	3.3	67	48.8	3.3	5.8	77.4	79.6	96.8	13.6	25.6	1.1	15.7	2.3
DSW	1	2	3.4	59.4	48	3.3	3.7	76.9	77.1	97.2	13.7	25.2	1.1	17	2.6
DSW	1	3	3.6	55.6	47.8	3.5	5	76.8	72.5	103.6	14.3	26.5	1.5	22.3	3.8
DSW	1	4	3.6	56.8	48.7	4.3	8.7	77.5	71.1	124.9	15.8	30.1	2.6	28.7	4.9
DSW	1	5	3.7	61.3	51.3	5.3	16.7	81.2	68.5	164.8	19.6	35.8	3.2	34.7	6.5
DSW	1	6	4.3	90.6	65.2	6.7	25.2	82.4	14.6	228.4	27.4	45.6	3.7	38	8.2
DSW	1	7	4.1	144.2	83.7	8	30	84.7	1	285.1	39.5	56.8	3.9	44.1	10
DSW	1	8	3.6	245	99.7	9	34.2	87.2	0.6	330.1	48.1	66.5	4	50.8	11.4
DSW	1	9	3.2	322.7	104.6	9.5	39.6	93	0.6	345.9	53.8	70.4	4.2	56.5	12.2
DSW	1	10	3	398.5	119.2	9.7	42.5	94.8	0.6	347.2	56	72.7	4.2	57.6	12.4

Climate	Day	Hour	Heat	Cool	Vent	WH	Cook	Refrig	ExtLight	IntLight	Office	Misc	Proc.	Motors	Comp
DSW	1	11	2.8	451.2	120.9	9.8	44.3	95.6	0.6	345.4	56.4	73.3	4.2	56.9	12.4
DSW	1	12	2.7	489.4	122.5	9.8	44.2	98.9	0.6	345.7	56.5	73.3	4.2	57	12.4
DSW	1	13	2.6	521.9	123.5	9.5	40.3	99.1	0.6	344.4	55.8	72.8	4.2	55.3	12.4
DSW	1	14	2.4	542.2	123.8	9.3	37.5	101.9	0.6	339.6	53.2	71.3	4	54.8	12.3
DSW	1	15	2.4	549.5	124.1	9	35.3	101.4	0.6	330.6	48.2	68.6	4	53.3	11.6
DSW	1	16	2.4	512	119.7	8.5	35	97.3	3.9	308.1	41.5	63.5	3.8	50	9.9
DSW	1	17	3.1	409.2	107.5	7.7	34.1	96.1	25.1	276.3	31	57.5	3.7	43.4	8.2
DSW	1	18	3	318	97.6	6.8	33.1	91.6	61.3	243.1	23.7	52.3	3.6	38.1	6.8
DSW	1	19	2.8	245.6	86.8	5.9	31.8	90.5	90.6	212.9	19.9	46.7	3.3	31.5	5.5
DSW	1	20	3	202.9	81.7	5.3	28.4	88.9	108.9	182.6	17.4	41.7	3.1	26.7	4.3
DSW	1	21	3.1	160.1	69.8	4.6	23.6	84.5	98.1	150.8	15.6	32.6	2.6	21	3.3
DSW	1	22	3.3	115.9	60.2	4.1	18.3	82.6	92.4	122.6	14.7	29.6	2.3	16.1	2.7
DSW	1	23	3.2	90.6	55	3.5	12	78.9	91.6	108	14.1	28.1	1.6	14	2.4
DSW	1	24	3.2	76.7	49.4	3.3	10.2	78	80.6	100.3	13.8	26.8	1.1	15.8	2.3
HID	1	1	4.1	27.1	41.5	3.5	5.7	75.8	79.6	97	13.7	25.5	1.1	15.8	2.3
HID	1	2	4.6	24.6	41.5	3.6	3.7	75.4	77.1	97.5	13.8	25.1	1.1	17.1	2.6
HID	1	3	4.8	24.4	42.6	3.8	5	75.4	72.5	103.9	14.4	26.4	1.5	22.4	3.7
HID	1	4	4.9	26.6	44.3	4.6	8.8	76.1	71.1	125.2	15.9	30.1	2.6	28.6	4.8
HID	1	5	5.4	27.7	47.5	5.8	16.8	79.8	66.5	164.3	19.5	35.6	3.2	35.2	6.4
HID	1	6	5.8	45.2	59.7	7.3	25.3	81.5	6.1	228.3	27.3	45.2	3.7	37.7	8.2
HID	1	7	4.8	76.4	77.7	8.8	30.2	83.5	1	284.5	39.6	56.3	3.9	43.8	9.9
HID	1	8	4.8	125.7	94.5	9.8	34.3	85.8	0.6	332.7	48.4	66	4	50.6	11.3
HID	1	9	4.3	165.3	98.1	10.4	39.7	91.1	0.6	349.1	54	70	4.2	56.3	12
HID	1	10	4	208.9	111.9	10.5	42.6	92.7	0.6	350.2	56.2	72.4	4.2	57.4	12.3
HID	1	11	3.7	241.3	112.5	10.7	44.4	93.5	0.6	348.2	56.7	73	4.2	56.8	12.3
HID	1	12	3.4	261	113.1	10.7	44.3	96.7	0.6	348.5	56.7	73	4.2	56.8	12.3
HID	1	13	3.3	291.9	113.5	10.4	40.4	97	0.6	347	56.2	72.4	4.2	55.2	12.3
HID	1	14	3.1	304.9	113.2	10.2	37.6	100	0.6	343	53.6	71	4	54.7	12.2
HID	1	15	2.9	327.9	113.8	9.9	35.4	99.6	0.6	333.4	48.6	68.2	4	53.2	11.5
HID	1	16	2.9	314.2	110.6	9.3	35.1	95.7	3.9	310.2	41.8	62.9	3.8	49.9	9.8
HID	1	17	3	265	101	8.4	34.2	94.6	25.1	277.6	31.3	56.9	3.7	43.1	8.2
HID	1	18	3.3	203.4	93.6	7.4	33.1	90.3	61.3	243.1	24.1	51.8	3.6	37.8	6.7
HID	1	19	3.4	149	83.1	6.4	31.7	88.9	70.3	213.4	20.2	46.3	3.2	31.3	5.4
HID	1	20	3.8	109.8	77	5.7	28.2	87.1	108.9	183.4	17.6	41.4	3.1	26.5	4.3
HID	1	21	4	74.3	65	5	23.3	82.7	98.1	151.5	15.7	32.3	2.6	20.9	3.2
HID	1	22	4.1	53.7	54.3	4.4	17.9	81.1	92.4	122.7	14.8	29.3	2.3	16	2.6
HID	1	23	3.7	37.6	48.7	3.8	11.6	77.4	91.6	108.4	14.1	27.8	1.6	13.9	2.4
HID	1	24	3.8	33.7	44.4	3.6	10	76.4	80.6	101.1	13.9	26.6	1.1	16.3	2.3
NWC	2	1	15.4	66.3	102.1	5.8	11.1	151.3	86.2	177.6	76.7	34.4	0.6	25.2	3.2
NWC	2	2	16.3	60.1	101.5	5.8	10.6	151	84.6	177	76.8	33.6	0.6	25.3	3.3
NWC	2	3	16.8	55.2	100.3	6.1	14.4	151.3	84.2	189.2	78.2	35.6	0.6	27.1	3.7
NWC	2	4	17.9	60.5	105.6	7.1	21.5	152.4	83.3	221.6	81.3	40.3	0.8	32.1	5.1
NWC	2	5	19.4	68.1	116.8	8.6	36.7	159.2	83.2	279.1	90.5	49.2	1.7	45.3	7.8
NWC	2	6	26.2	90.8	154.6	10.8	51.5	160.8	27.1	382.4	112.6	63.6	2.2	61.1	11
NWC	2	7	31.7	139.5	203	12.9	65	163.2	5.3	498.2	137.9	79.4	2.9	79.6	14.9
NWC	2	8	30.6	192.2	226.8	14.7	75	165.6	2.5	572	159.1	91.6	3.8	89.9	17.2
NWC	2	9	27.1	257.1	237	15.8	83.4	172.7	1.8	604.1	171.1	97.9	4.8	94.2	18
NWC	2	10	23.8	324.2	242.5	17.7	90	174.6	1.8	615	176.9	100.7	5.1	95.6	18.4
NWC	2	11	21.2	386.3	245.6	18.5	96.9	176.4	1.8	612.9	178.4	101.6	5.1	96	18.4
NWC	2	12	18.4	440.2	247.5	18.7	100.5	182.8	1.8	613.3	178.4	101.8	5	95.5	18.4
NWC	2	13	16.2	479.6	248.5	18.6	94.1	183.8	1.8	611.2	176.6	101.8	5	94.8	18.3
NWC	2	14	14.6	506.1	250	18.5	88.4	189	1.9	606.5	172.9	100.7	4.9	92.1	17.5
NWC	2	15	14.5	519	250.6	17.9	87.9	188.5	2.9	590.4	165.1	98	4.9	87.8	16.2
NWC	2	16	15	515	250.3	17	89.4	182	4.9	563.9	150.8	92.8	4.8	80.8	14.1
NWC	2	17	16.3	476	240.3	15.7	87.4	180.2	24	520.8	130.4	83.9	4.4	69.7	11
NWC	2	18	15.4	386	208	14.1	81.8	172.9	43.5	453.1	106.5	74.3	4	60.4	8.1
NWC	2	19	10.8	255.8	171.9	12.8	72.1	170.4	63.3	398.9	92.6	67.5	3.6	52.9	6.1
NWC	2	20	11.7	199.8	150.8	11.5	58.2	168.2	114.6	350.8	85.9	61.7	3	46	5
NWC	2	21	12.3	151.9	137.4	10.1	46.6	161.3	113.2	293.3	81.9	54	2.2	40.8	4.4
NWC	2	22	12.8	111.8	119.3	8.6	33	159.7	107.4	245.3	79.5	48.4	1.6	35.5	3.9
NWC	2	23	14.5	91.3	112.2	6.8	20.1	153.1	106	208.1	77.8	42.7	1.2	31.6	3.5
NWC	2	24	14.8	73.7	104.5	6.1	13	151.9	88.8	186.5	76.9	37.1	0.7	26.4	3.3
NWV	2	1	6.3	53.6	79.8	3	5.8	112.1	82.9	102.5	64.7	24.9	3.7	14.5	3.1
NWV	2	2	6.8	46.2	77.4	2.9	6.1	111.7	79.7	101	65	24.7	3.7	14.6	3.2
NWV	2	3	7.4	43.6	76.7	2.8	7.4	111.7	78.4	103.8	66.5	25.8	3.8	16.6	3.7
NWV	2	4	7.9	44.4	77.9	3.1	10	112.3	70.6	121.8	68.2	29.1	3.9	19.6	4.7
NWV	2	5	9	45.3	81.8	3.9	15.5	117.8	65.8	158.8	71.3	36	3.9	22.7	6.4
NWV	2	6	9.6	59.3	104.9	5	23.5	117.6	20.7	217.5	79	44.8	4	27.4	8.8
NWV	2	7	12.3	77.5	129	6.3	33.9	119.1	3.7	288.3	92.4	54	4.1	34.9	11.2
NWV	2	8	10.1	117.8	148.9	7.6	43.7	120.8	1.1	341.1	103.8	61.5	4.1	38.7	12.3
NWV	2	9	7.9	164.8	154.3	8.4	52.8	127.6	1.1	364.3	111.4	65.3	4.1	40.8	12.8
NWV	2	10	6	221.8	160.9	8.7	64.6	130	1.1	370.6	115	67.8	4.1	42.1	13
NWV	2	11	4.7	278.5	163.9	8.8	74	132.1	1.1	373.6	115.9	68.6	4.1	42.7	13
NWV	2	12	4.1	328.1	166.3	8.8	71.6	138.2	1.1	375.1	116.1	68.6	4.1	43	13
NWV	2	13	3.6	368.3	167.7	8.6	65.9	139.2	1.1	375.4	114.4	67.9	4.1	42.8	13
NWV	2	14	3.3	396.4	169.1	8.5	61.1	144.2	1.1	371.8	111.7	67.2	4.1	42.4	12.8
NWV	2	15	3.2	402.3	160.6	8.4	57.9	143.9	1.1	362.9	107.4	65.7	4.1	41.3	12.2
NWV	2	16	3.3	383.4	153.3	8.1	60	138.1	2.9	344.2	101.1	62.6	4.1	38.6	10.7
NWV	2	17	3.5	352.3	148	7.4	65.4	136.8	7.7	301.5	92	58.2	4.1	35.7	9
NWV	2	18	4	280.4	132.4	6.6	63.7	130.3	19	266.8	82.5	53.4	4	32.9	7.4
NWV	2	19	2.7	202.8	116.4	5.8	54.2	128.2	54.5	235.2	76	48.5	4	29.4	6.3
NWV	2	20	5.2	147.5	111.1	5.2	44.3	126.6	95.7	212.4	71.9	43.8	4	25.3	5.5
NWV	2	21	5.5	113.9	105.1	4.5	30.2	120.5	92.2	183.6	68.8	38.8	3.9	22.6	4.9
NWV	2	22	5.8	86.9	93.9	3.9	18.1	119	88.8	146.5	66.9	33.5	3.7	18.3	4.2
NWV	2	23	5.7	70	87	3.4	10.4	113.5	87.8	122.3	65.7	29.3	3.7	16	3.7
NWV	2	24	6.3	57.9	80.8	3	6.7	112.5	83.4	106.2	65.2	26	3.7	15	3.3
NWI	2	1	1.7	46.5	41.8	0.9	2.7	106.6	55.8	48.9	10.9	16.4	0.3	9.7	2
NWI	2	2	1.7	39.4	40.4	0.9	3.1	105.9	55.4	49.2	11.1	16.1	0.3	10	2.1
NWI	2	3	1.8	35.1	41.2	1	4.6	105.5	55.4	52.7	11.7	17.9	0.3	11	2.6
NWI	2	4	1.8	32.9	43.4	1.3	7.9	105.7	54.5	67.3	13.9	24.5	0.5	14.7	4.2
NWI	2	5	1.8	38.8	46.8	1.7	14.2	110.8	54	99.3	20.1	35.8	0.6	20.8	6.4
NWI	2	6	2.1	56	57.1	2.2	23	112	19.1	154.3	32.4	47.4	0.7	28	9.1
NWI	2	7	1.8	94.7	72.5	2.6	28.3	114.3	0.6	203.9	45.8	56.6	0.8	33.2	11.8
NWI	2	8	1.5	150.9	82.6	2.9	31	116.7	0.3	236.2	53.4	63.4	0.8	36.1	13.3
NWI	2	9	1.2	208.9	88	3.1	33.4	124.2	0.3	248.1	57.6	66.8	0.8	37	14

Climate	Day	Hour	Heat	Cool	Vent	WH	Cook	Refrig	ExtLight	IntLight	Office	Misc	Proc.	Motors	Comp
NWI	2	10	1	255.5	92.6	3.2	35.6	126.7	0.3	255.7	59.1	68.5	0.8	37.3	14.1
NWI	2	11	0.7	296.3	95.8	3.3	37.3	128.3	0.3	256.4	59	69	0.8	37.3	14.1
NWI	2	12	0.7	331.4	97.7	3.3	36.1	133.8	0.3	257.3	58.4	68.8	0.8	37.2	14.1
NWI	2	13	0.6	357.8	99.2	3.1	32.4	134.4	0.3	254.4	57.6	68.3	0.8	37	14
NWI	2	14	0.6	381.2	100.4	3	30	139	1.1	249.3	55.8	67.1	0.8	36	13.7
NWI	2	15	0.6	393.8	100.7	2.8	28.5	138.3	1.2	242.5	51	63.9	0.7	32.5	12.4
NWI	2	16	0.6	387.4	98.9	2.4	27.1	131.6	0.6	224	41.3	58.6	0.6	26.9	9.8
NWI	2	17	0.7	308.4	86.4	2	25.9	130.6	14.1	194.6	29.6	51	0.6	22	7.2
NWI	2	18	0.9	248.2	75.6	1.7	24.6	124.3	25.6	163.1	22.9	44	0.6	19	5.4
NWI	2	19	1	200.3	67.8	1.5	22.3	124.3	60.2	146.2	19.4	39.3	0.5	16.6	4.4
NWI	2	20	1	160.2	63.4	1.4	19.5	123.2	80.7	125.1	16.5	34.1	0.4	14.7	3.6
NWI	2	21	1.1	127.7	57.4	1.3	14.9	116.8	79.6	103	14.1	29.6	0.3	13.1	3
NWI	2	22	1.3	93.2	50.4	1.3	9.6	114.1	69.8	80.2	13	25.7	0.4	11.8	2.8
NWI	2	23	1.4	73.5	47.5	1.2	5	108.7	62.7	62.5	11.8	20.7	0.3	10.4	2.3
NWI	2	24	1.6	55.9	43.7	1	3.1	107.4	58	51.9	11	18.2	0.3	10	2.1
RMN	2	1	6.3	37.5	79.8	3	5.8	112.1	82.9	102.5	64.7	24.9	3.7	14.5	3.1
RMN	2	2	6.8	32.4	77.4	2.9	6.1	111.7	79.7	101	65	24.7	3.7	14.6	3.2
RMN	2	3	7.4	30.5	76.7	2.8	7.4	111.7	78.4	103.8	66.5	25.8	3.8	16.6	3.7
RMN	2	4	7.9	31.1	77.9	3.1	10	112.3	70.6	121.8	68.2	29.1	3.9	19.6	4.7
RMN	2	5	9	31.7	81.8	3.9	15.5	117.8	65.8	158.8	71.3	36	3.9	22.7	6.4
RMN	2	6	9.6	41.5	104.9	5	23.5	117.6	20.7	217.5	79	44.8	4	27.4	8.8
RMN	2	7	12.3	54.2	129	6.3	33.9	119.1	3.7	288.3	92.4	54	4.1	34.9	11.2
RMN	2	8	10.1	82.4	148.9	7.6	43.7	120.8	1.1	341.1	103.8	61.5	4.1	38.7	12.3
RMN	2	9	7.9	115.4	154.3	8.4	52.8	127.6	1.1	364.3	111.4	65.3	4.1	40.8	12.8
RMN	2	10	6	155.3	160.9	8.7	64.6	130	1.1	370.6	115	67.8	4.1	42.1	13
RMN	2	11	4.7	194.9	163.9	8.8	74	132.1	1.1	373.6	115.9	68.6	4.1	42.7	13
RMN	2	12	4.1	229.7	166.3	8.8	71.6	138.2	1.1	375.1	116.1	68.6	4.1	43	13
RMN	2	13	3.6	257.8	167.7	8.6	65.9	139.2	1.1	375.4	114.4	67.9	4.1	42.8	13
RMN	2	14	3.3	277.5	169.1	8.5	61.1	144.2	1.1	371.8	111.7	67.2	4.1	42.4	12.8
RMN	2	15	3.2	281.6	160.6	8.4	57.9	143.9	1.1	362.9	107.4	65.7	4.1	41.3	12.2
RMN	2	16	3.3	268.4	153.3	8.1	60	138.1	2.9	344.2	101.1	62.6	4.1	38.6	10.7
RMN	2	17	3.5	246.6	148	7.4	65.4	136.8	7.7	301.5	92	58.2	4.1	35.7	9
RMN	2	18	4	196.3	132.4	6.6	63.7	130.3	19	266.8	82.5	53.4	4	32.9	7.4
RMN	2	19	2.7	142	116.4	5.8	54.2	128.2	54.5	235.2	76	48.5	4	29.4	6.3
RMN	2	20	5.2	103.3	111.1	5.2	44.3	126.6	95.7	212.4	71.9	43.8	4	25.3	5.5
RMN	2	21	5.5	79.8	105.1	4.5	30.2	120.5	92.2	183.6	68.8	38.8	3.9	22.6	4.9
RMN	2	22	5.8	60.8	93.9	3.9	18.1	119	88.8	146.5	66.9	33.5	3.7	18.3	4.2
RMN	2	23	5.7	49	87	3.4	10.4	113.5	87.8	122.3	65.7	29.3	3.7	16	3.7
RMN	2	24	6.3	40.6	80.8	3	6.7	112.5	83.4	106.2	65.2	26	3.7	15	3.3
NCC	2	1	12.1	96	107	5.7	11.8	152.2	86.2	176.9	76.6	34.9	0.6	24.3	3
NCC	2	2	13.5	91.2	106.1	5.7	10.9	151.9	84.8	175.9	76.7	33.8	0.6	24.4	3
NCC	2	3	13.8	87.4	104	6	14.6	152	84.2	187.7	78.1	35.5	0.6	26.3	3.5
NCC	2	4	15	84.3	109.9	7	22	153.2	83.3	218.8	81.1	40	0.8	31.6	4.9
NCC	2	5	15.9	97	121.7	8.4	37.1	159.9	83.2	275.8	90.3	48.6	1.7	44.7	7.6
NCC	2	6	22.1	129.1	158.8	10.6	51.3	161.2	11.3	378	112.5	62.8	2.2	60.2	10.8
NCC	2	7	25.6	168.7	206.1	12.7	64.5	163.7	5.3	490.1	137.6	78.5	2.9	78.3	14.7
NCC	2	8	24.9	266.1	225	14.6	74.7	166	2.5	565.7	158.7	90.7	3.7	88.2	17
NCC	2	9	20.3	381.2	236.2	15.7	83.3	173.2	1.8	598.4	170.5	97	4.6	92.1	17.8
NCC	2	10	17.5	468	243.4	17	89.9	175.2	1.8	610.4	176.3	100	4.9	93.5	18.2
NCC	2	11	14.7	546.1	248.1	18.1	96.1	177.1	1.8	609.3	177.8	101	4.9	93.9	18.2
NCC	2	12	12.6	614.2	253.8	18.4	100.7	183.6	1.8	609.8	177.7	101.2	4.9	93.8	18.2
NCC	2	13	11	677.2	255.9	18.2	95	184.7	1.8	605.1	175.9	101	4.9	93.5	18.1
NCC	2	14	9.8	725	259.4	18.2	90	190	1.9	602	172.4	100	4.8	90.6	17.4
NCC	2	15	9.4	755.5	262.2	17.8	89.9	189.6	2.9	587.1	164.7	97.4	4.8	86.4	16
NCC	2	16	10.7	739	262.1	16.7	91.9	183	4.9	562.6	150.4	92.3	4.7	79.3	13.8
NCC	2	17	12.5	694.9	251.9	15.3	90.5	181.3	24	520	129.7	83.4	4.4	68	10.6
NCC	2	18	11.1	575.7	215.4	13.7	84.4	173.9	43.4	451	105.6	73.8	4	58.6	7.6
NCC	2	19	6.9	394.2	177.6	12.5	74.3	171.2	47.5	397.5	91.6	66.9	3.6	51.3	5.8
NCC	2	20	8.9	333.3	160.3	11.4	60.2	169.2	114.6	347.5	85	61.1	3	44.8	4.8
NCC	2	21	8.1	276	148.3	10	48.1	162.2	113.2	291	81.4	53.5	2.2	39.9	4.2
NCC	2	22	9.5	190.4	128.4	8.7	35.2	160.6	107.4	243.4	79.3	48	1.6	34.8	3.7
NCC	2	23	10.9	163.7	117.8	7.3	21.3	154	106	207.3	77.7	43	1.2	30.9	3.4
NCC	2	24	9.1	133.4	103.3	6.2	13.7	153	88.8	180.4	76.9	38	0.7	25.7	3.1
NCV	2	1	1.2	70.2	44.2	0.9	2.6	112.2	55.8	48.5	10.7	16.1	0.3	9.4	2
NCV	2	2	1.3	61.7	43	0.9	3	111.4	55.4	48.9	10.9	15.8	0.3	9.7	2.1
NCV	2	3	1.7	54.2	42.4	1	4.5	111.1	55.4	52.4	11.5	17.3	0.3	10.7	2.4
NCV	2	4	1.5	53.9	44.9	1.3	7.8	111.2	54.5	66.9	13.6	23.7	0.5	14.4	4
NCV	2	5	1.6	64.4	48.9	1.7	14.2	116.6	54	98	19.8	35.1	0.6	20.5	6.2
NCV	2	6	3.3	90.3	59.6	2.2	21.4	118	9.8	148.3	32	46.6	0.7	27.7	9
NCV	2	7	1.2	164.1	77	2.6	27	120.5	0.6	195.5	44.8	55.5	0.8	32.7	11.8
NCV	2	8	1.1	245.8	87.8	3	29.7	123.1	0.3	226.3	51.9	61.8	0.8	35.4	13.3
NCV	2	9	0.9	331.6	93.2	3.1	32.2	131.1	0.3	237.7	56	64.7	0.8	36.3	14
NCV	2	10	0.8	378	97.6	3.2	34.5	133.8	0.3	245.3	57.8	66	0.8	36.5	14.1
NCV	2	11	0.6	421.7	100.6	3.3	36.3	135.5	0.3	246.1	58.3	66.4	0.8	36.5	14.1
NCV	2	12	0.6	449.4	102.3	3.2	34.9	141.2	0.3	246.9	58.2	66.2	0.8	36.5	14.1
NCV	2	13	0.6	479.7	103.9	3.1	32.6	141.6	0.3	244.4	57.5	66.2	0.8	36.4	14
NCV	2	14	0.4	509.4	104.8	2.9	30.1	146.2	1.1	240.1	55.8	65.7	0.8	35.5	13.6
NCV	2	15	0.4	508.8	104.8	2.7	28.8	145.2	1.2	235	51	62.9	0.7	32.1	12.2
NCV	2	16	0.4	515.1	103.9	2.4	27.5	137.9	0.6	217	41.1	57.7	0.6	26.6	9.6
NCV	2	17	0.4	434.4	92.9	2	26.3	136.9	14.1	187.3	29.3	50.2	0.6	21.7	6.9
NCV	2	18	0.4	354.6	80.5	1.7	25.1	130.1	25.6	162.4	22.6	43.3	0.6	18.6	5.2
NCV	2	19	0.8	308.9	74	1.6	22.7	130.6	42.1	145.5	19.2	38.6	0.5	16.3	4.2
NCV	2	20	0.8	251.1	68.6	1.5	19.7	129.7	80.7	124.2	16.3	33.4	0.4	14.3	3.4
NCV	2	21	0.9	203.8	62.2	1.4	14.9	123	79.6	102.5	13.9	29	0.3	12.8	2.9
NCV	2	22	0.9	156.6	55	1.3	9.5	120	69.8	79.7	12.8	25.4	0.4	11.5	2.8
NCV	2	23	1.1	125.1	52.3	1.2	4.8	114.4	62.7	62	11.6	20.5	0.3	10.1	2.3
NCV	2	24	1.2	99	47.2	1.1	3	113.2	58	51.6	10.8	17.9	0.3	9.7	2.1
NCI	2	1	4.7	81.1	83.8	2.9	6.6	112	83	99.4	64.2	24.7	3.7	13.6	3.1
NCI	2	2	5.2	64.7	82.7	2.8	6.2	111.6	79.9	98.1	64.5	24.6	3.7	13.8	3.1
NCI	2	3	5.1	62.4	80	2.8	7.4	111.6	78.4	101.2	66	25.7	3.8	15.8	3.6
NCI	2	4	5.2	61.9	80.7	3.1	10	112.2	70.6	119.6	67.6	29.2	3.9	19.1	4.7
NCI	2	5	5.4	64.6	83.6	3.9	15.4	117.6	65.8	155.6	70.8	36	3.9	22.6	6.3
NCI	2	6	5.9	83.5	106.9	5	23.2	117	7.6	213.3	78.3	44.6	4	27.5	8.8
NCI	2	7	8.1	104.5	130.9	6.3	33.4	118.4	3.7	280.4	91.4	53.7	4.1	35	11.1
NCI	2	8	6.5	177.7	150.3	7.5	43	120.1	1.1	332.1	102.1	61.2	4.1	38.7	12.3

Climate	Day	Hour	Heat	Cool	Vent	WH	Cook	Refrig	ExtLight	IntLight	Office	Misc	Proc.	Motors	Comp
NCI	2	9	5.2	247.3	155.8	8.2	52.1	126.9	1.1	353.1	108.4	65	4.1	41	12.8
NCI	2	10	3.8	329.3	163.5	8.5	64.4	129.6	1.1	359	111.8	67.5	4.1	42.2	13
NCI	2	11	3	417.2	167	8.6	74.7	131.8	1.1	362	112.7	68.3	4.1	42.9	13.1
NCI	2	12	3.2	492.2	170.1	8.6	72.5	138	1.1	362.7	113	68	4.1	42.9	13.1
NCI	2	13	2.8	546	172.4	8.3	66.4	139.1	1.1	362.7	112	67.3	4.1	42.7	13.1
NCI	2	14	2.7	596.1	174.6	8.1	61.4	144.1	1.1	361.2	110.3	66.4	4.1	42.3	12.9
NCI	2	15	2.6	604.4	172	7.9	57.8	143.9	1.1	352.1	106.6	65	4.1	41.3	12.3
NCI	2	16	2.7	573.6	163.7	7.5	60	138	2.9	334	100.5	61.8	4.1	38.5	10.8
NCI	2	17	2.8	549.6	159.5	6.7	66.4	136.7	7.5	291.5	91.5	57.4	4.1	35.5	9
NCI	2	18	3.1	443	142.8	5.9	65.3	130.1	19	259.6	82.1	52.6	4	32.8	7.4
NCI	2	19	1.6	335	124.9	5	55.9	127.9	45.5	230.4	75.5	47.7	4	29.2	6.3
NCI	2	20	4.3	246.3	117.2	4.3	46.1	126.5	95.7	207.1	71.4	42.9	4	24.6	5.5
NCI	2	21	4.1	194.9	110.7	3.7	31.7	120.4	92.2	177.5	68.2	37.9	3.9	21.9	4.9
NCI	2	22	4.2	148.1	99.4	3.3	20	119	88.8	141.3	66.3	32.7	3.7	17.9	4.2
NCI	2	23	4	124.5	92	3	12.2	113.5	88	118.5	65.1	28.9	3.7	15.3	3.7
NCI	2	24	4.1	101.5	85.1	2.9	7.7	112.6	83.5	100.3	64.6	25.6	3.7	14.1	3.2
SCC	2	1	5.9	81.7	120	7.5	11	156.9	141.7	188.7	65.3	33.2	8.3	20.9	4
SCC	2	2	5.9	76.1	114.2	7.2	10.4	156.2	139.5	185.3	65.3	32.6	8.4	20.4	4
SCC	2	3	6.1	73.5	112	7.3	12.1	156	134.4	191.6	67.2	34	8.5	20.9	4.4
SCC	2	4	6.5	77	123.8	7.9	18.2	157.1	133.2	225.5	71.4	38.7	8.7	25.8	6
SCC	2	5	7.7	93.2	132.6	10	34.3	164.3	131.5	316.5	85	51.9	9.2	42.9	10.3
SCC	2	6	14.3	141	169.8	13.5	51.6	166.9	6.3	438.9	110	71.3	10.2	66.3	16.3
SCC	2	7	17.9	202.3	213.7	17.3	63.4	170.2	3.9	574.1	141.3	91.7	12.7	89.9	23.2
SCC	2	8	14.7	272.8	234.2	20.4	70.2	173.9	3.8	689.9	166.2	106.1	14.3	104.3	27.4
SCC	2	9	13.6	337.4	250.3	21.8	76.4	182.7	3.8	740.7	181.6	115.2	15.5	109.6	29.4
SCC	2	10	10.1	410	263.5	22.5	85	184.5	3.8	752.4	187.6	118.3	15.9	111.7	30.1
SCC	2	11	7.4	466.3	268.5	23.2	90.7	184.8	3.8	750.9	188.9	120.9	15.9	112.1	30.2
SCC	2	12	5.6	499.3	273	23.3	89.6	189.9	3.8	752.2	188.5	121.4	15.9	112	30.2
SCC	2	13	4.6	508.7	276.3	22.6	83.6	190.1	3.8	752	186.3	119.6	15.9	111.3	29.9
SCC	2	14	4.1	519.6	277.6	22.2	78.5	194.9	3.8	746.1	182.4	118.1	15.8	106.8	28.4
SCC	2	15	4.3	502.2	271.2	21.3	77.5	194.3	4.4	728.9	173.5	114	15.3	99.7	25.9
SCC	2	16	4.4	491.3	267.2	20	79.3	187.5	8.3	688.6	157.8	106.3	13.7	86.3	21.4
SCC	2	17	5.2	425.3	254.7	18.2	80.2	185.6	33.3	635.9	132.7	94.8	12.9	71	15.8
SCC	2	18	5.5	341	224.6	16	74.2	178.2	79.3	560.2	106.9	80.9	12.2	59.3	11.5
SCC	2	19	6.7	252	195.3	14.2	65.3	176.5	165.2	492.2	90	69.8	11.6	51.2	8.8
SCC	2	20	10.1	204.2	173.6	12.7	53.6	174.9	169.4	422.7	81.5	58.7	10.6	44.5	7.3
SCC	2	21	10.9	170.8	162.2	10.9	42.1	168.1	168.1	339	74.7	50.1	9.5	38.5	6.1
SCC	2	22	12	141.4	149.2	9.4	31	165.9	159.7	279.2	70.3	44.1	8.9	32.4	5
SCC	2	23	5.4	112.2	132.6	8.3	18.2	159.4	153	228	67.1	38.2	8.6	25.6	4.4
SCC	2	24	5.4	99.5	126.4	7.8	13.1	157.8	146.3	201	65.7	35	8.4	22.3	4.1
SCV	2	1	5.9	163.3	120	7.5	11	156.9	141.7	188.7	65.3	33.2	8.3	20.9	4
SCV	2	2	5.9	152.2	114.2	7.2	10.4	156.2	139.5	185.3	65.3	32.6	8.4	20.4	4
SCV	2	3	6.1	146.9	112	7.3	12.1	156	134.4	191.6	67.2	34	8.5	20.9	4.4
SCV	2	4	6.5	153.9	123.8	7.9	18.2	157.1	133.2	225.5	71.4	38.7	8.7	25.8	6
SCV	2	5	7.7	186.3	132.6	10	34.3	164.3	131.5	316.5	85	51.9	9.2	42.9	10.3
SCV	2	6	14.3	282	169.8	13.5	51.6	166.9	6.3	438.9	110	71.3	10.2	66.3	16.3
SCV	2	7	17.9	404.6	213.7	17.3	63.4	170.2	3.9	574.1	141.3	91.7	12.7	89.9	23.2
SCV	2	8	14.7	545.6	234.2	20.4	70.2	173.9	3.8	689.9	166.2	106.1	14.3	104.3	27.4
SCV	2	9	13.6	674.7	250.3	21.8	76.4	182.7	3.8	740.7	181.6	115.2	15.5	109.6	29.4
SCV	2	10	10.1	820	263.5	22.5	85	184.5	3.8	752.4	187.6	118.3	15.9	111.7	30.1
SCV	2	11	7.4	932.6	268.5	23.2	90.7	184.8	3.8	750.9	188.9	120.9	15.9	112.1	30.2
SCV	2	12	5.6	998.6	273	23.3	89.6	189.9	3.8	752.2	188.5	121.4	15.9	112	30.2
SCV	2	16	4.4	982.5	267.2	20	79.3	187.5	8.3	688.6	157.8	106.3	13.7	86.3	21.4
SCV	2	17	5.2	850.7	254.7	18.2	80.2	185.6	33.3	635.9	132.7	94.8	12.9	71	15.8
SCV	2	18	5.5	681.9	224.6	16	74.2	178.2	79.3	560.2	106.9	80.9	12.2	59.3	11.5
SCV	2	19	6.7	504	195.3	14.2	65.3	176.5	165.2	492.2	90	69.8	11.6	51.2	8.8
SCV	2	20	10.1	408.5	173.6	12.7	53.6	174.9	169.4	422.7	81.5	58.7	10.6	44.5	7.3
SCV	2	21	10.9	341.6	162.2	10.9	42.1	168.1	168.1	339	74.7	50.1	9.5	38.5	6.1
SCV	2	22	12	282.8	149.2	9.4	31	165.9	159.7	279.2	70.3	44.1	8.9	32.4	5
SCV	2	23	5.4	224.4	132.6	8.3	18.2	159.4	153	228	67.1	38.2	8.6	25.6	4.4
SCV	2	24	5.4	199	126.4	7.8	13.1	157.8	146.3	201	65.7	35	8.4	22.3	4.1
SCI	2	1	5.9	114.3	120	7.5	11	156.9	141.7	188.7	65.3	33.2	8.3	20.9	4
SCI	2	2	5.9	106.6	114.2	7.2	10.4	156.2	139.5	185.3	65.3	32.6	8.4	20.4	4
SCI	2	3	6.1	102.8	112	7.3	12.1	156	134.4	191.6	67.2	34	8.5	20.9	4.4
SCI	2	4	6.5	107.7	123.8	7.9	18.2	157.1	133.2	225.5	71.4	38.7	8.7	25.8	6
SCI	2	5	7.7	130.4	132.6	10	34.3	164.3	131.5	316.5	85	51.9	9.2	42.9	10.3
SCI	2	6	14.3	197.4	169.8	13.5	51.6	166.9	6.3	438.9	110	71.3	10.2	66.3	16.3
SCI	2	7	17.9	283.2	213.7	17.3	63.4	170.2	3.9	574.1	141.3	91.7	12.7	89.9	23.2
SCI	2	8	14.7	382	234.2	20.4	70.2	173.9	3.8	689.9	166.2	106.1	14.3	104.3	27.4
SCI	2	9	13.6	472.3	250.3	21.8	76.4	182.7	3.8	740.7	181.6	115.2	15.5	109.6	29.4
SCI	2	10	10.1	574	263.5	22.5	85	184.5	3.8	752.4	187.6	118.3	15.9	111.7	30.1
SCI	2	11	7.4	652.8	268.5	23.2	90.7	184.8	3.8	750.9	188.9	120.9	15.9	112.1	30.2
SCI	2	12	5.6	699	273	23.3	89.6	189.9	3.8	752.2	188.5	121.4	15.9	112	30.2
SCI	2	13	4.6	712.2	276.3	22.6	83.6	190.1	3.8	752	186.3	119.6	15.9	111.3	29.9
SCI	2	14	4.1	727.5	277.6	22.2	78.5	194.9	3.8	746.1	182.4	118.1	15.8	106.8	28.4
SCI	2	15	4.3	703.1	271.2	21.3	77.5	194.3	4.4	728.9	173.5	114	15.3	99.7	25.9
SCI	2	16	4.4	687.8	267.2	20	79.3	187.5	8.3	688.6	157.8	106.3	13.7	86.3	21.4
SCI	2	17	5.2	595.5	254.7	18.2	80.2	185.6	33.3	635.9	132.7	94.8	12.9	71	15.8
SCI	2	18	5.5	477.3	224.6	16	74.2	178.2	79.3	560.2	106.9	80.9	12.2	59.3	11.5
SCI	2	19	6.7	352.8	195.3	14.2	65.3	176.5	165.2	492.2	90	69.8	11.6	51.2	8.8
SCI	2	20	10.1	285.9	173.6	12.7	53.6	174.9	169.4	422.7	81.5	58.7	10.6	44.5	7.3
SCI	2	21	10.9	239.1	162.2	10.9	42.1	168.1	168.1	339	74.7	50.1	9.5	38.5	6.1
SCI	2	22	12	198	149.2	9.4	31	165.9	159.7	279.2	70.3	44.1	8.9	32.4	5
SCI	2	23	5.4	157.1	132.6	8.3	18.2	159.4	153	228	67.1	38.2	8.6	25.6	4.4
SCI	2	24	5.4	139.3	126.4	7.8	13.1	157.8	146.3	201	65.7	35	8.4	22.3	4.1
DSW	2	1	3	102.3	54.8	3.1	5.7	78.4	79.6	96.5	13.4	25.5	1.1	15.9	2.4
DSW	2	2	3	92.7	52.6	3.2	3.7	77.9	77.1	97	13.5	25.1	1.1	17.3	2.6
DSW	2	3	3	89.2	53.5	3.4	5	77.8	72.5	103.8	14.1	26.5	1.5	22.6	3.8
DSW	2	4	3	92.3	54.9	4.1	8.8	78.5	71.1	125.1	15.7	30.2	2.6	29.1	5
DSW	2	5	3	98.8	56	5.2	16.8	82.1	70.4	164.8	19.6	35.8	3.2	35.8	6.5
DSW	2	6	3.2	144.1	72	6.5	25.3	83.3	6.1	229.8	27.6	45.4	3.7	38.2	8.3
DSW	2	7	3.3	212.5	88.6	7.7	30.2	85.8	1	286.9	39.7	56.6	3.9	44.3	10.1
DSW	2	8	2.7	341.4	104.5	8.6	34.3	88.6	0.6	330.3	48.4	66.3	4	50.9	11.5
DSW	2	9	2.4	444.5	110.7	9.1	39.6	94.9	0.6	346.8	53.8	70.3	4.2	56.6	12.2
DSW	2	10	2.5	544.4	125.9	9.3	42.5	97	0.6	347.8	55.9	72.6	4.2	57.7	12.5

Climate	Day	Hour	Heat	Cool	Vent	WH	Cook	Refrig	ExtLight	IntLight	Office	Misc	Proc.	Motors	Comp
DSW	2	11	2.5	614.6	127.7	9.4	44.3	97.5	0.6	346	56.5	73.3	4.2	57	12.5
DSW	2	12	2.4	651.5	129.3	9.5	44.3	100.9	0.6	346.2	56.6	73.3	4.2	57	12.5
DSW	2	13	2.3	686.7	130.7	9.2	40.4	101	0.6	344.9	55.9	72.7	4.2	55.3	12.5
DSW	2	14	2.2	704	130.8	9	37.6	103.8	0.6	340.6	53.1	71.3	4	54.9	12.3
DSW	2	15	2.2	707.9	131.6	8.8	35.4	103.2	0.6	330.8	48	68.4	4	53.4	11.7
DSW	2	16	2.2	652.9	125.9	8.3	35.1	98.9	3.9	308.2	41.2	63.1	3.8	50.1	10
DSW	2	17	2.4	522.1	112.6	7.5	34.2	97.6	25.1	275.6	30.6	57.1	3.7	43.4	8.3
DSW	2	18	2.3	417.2	101.3	6.6	33.1	93	61.3	242.3	23.4	51.9	3.6	38.1	6.8
DSW	2	19	2.3	329.2	90.3	5.8	31.7	92.1	108.9	212.7	19.5	46.4	3.2	31.5	5.5
DSW	2	20	2.4	267.1	86	5.1	28.2	90.4	108.9	182.3	17.1	41.4	3.1	26.7	4.3
DSW	2	21	2.5	215.9	74.1	4.4	23.3	85.9	98.1	150.5	15.3	32.4	2.6	20.9	3.3
DSW	2	22	2.5	163.1	63.6	3.9	17.9	83.7	92.4	122.3	14.5	29.3	2.3	16	2.7
DSW	2	23	2.5	129.9	58.6	3.4	11.6	80.1	91.6	108	13.8	27.8	1.6	14	2.4
DSW	2	24	3	112	55.2	3.2	10	79.1	80.6	100.6	13.6	26.6	1.1	16.4	2.4
HID	2	1	3.3	53.6	48.8	3.3	5.8	77.4	79.6	96.8	13.6	25.6	1.1	15.7	2.3
HID	2	2	3.4	47.6	48	3.3	3.7	76.9	77.1	97.2	13.7	25.2	1.1	17	2.6
HID	2	3	3.6	44.5	47.8	3.5	5	76.8	72.5	103.6	14.3	26.5	1.5	22.3	3.8
HID	2	4	3.6	45.5	48.7	4.3	8.7	77.5	71.1	124.9	15.8	30.1	2.6	28.7	4.9
HID	2	5	3.7	49	51.3	5.3	16.7	81.2	68.5	164.8	19.6	35.8	3.2	34.7	6.5
HID	2	6	4.3	72.5	65.2	6.7	25.2	82.4	14.6	228.4	27.4	45.6	3.7	38	8.2
HID	2	7	4.1	115.4	83.7	8	30	84.7	1	285.1	39.5	56.8	3.9	44.1	10
HID	2	8	3.6	196	99.7	9	34.2	87.2	0.6	330.1	48.1	66.5	4	50.8	11.4
HID	2	9	3.2	258.1	104.6	9.5	39.6	93	0.6	345.9	53.8	70.4	4.2	56.5	12.2
HID	2	10	3	318.8	119.2	9.7	42.5	94.8	0.6	347.2	56	72.7	4.2	57.6	12.4
HID	2	11	2.8	360.9	120.9	9.8	44.3	95.6	0.6	345.4	56.4	73.3	4.2	56.9	12.4
HID	2	12	2.7	391.5	122.5	9.8	44.2	98.9	0.6	345.7	56.5	73.3	4.2	57	12.4
HID	2	13	2.6	417.6	123.5	9.5	40.3	99.1	0.6	344.4	55.8	72.8	4.2	55.3	12.4
HID	2	14	2.4	433.7	123.8	9.3	37.5	101.9	0.6	339.6	53.2	71.3	4	54.8	12.3
HID	2	15	2.4	439.6	124.1	9	35.3	101.4	0.6	330.6	48.2	68.6	4	53.3	11.6
HID	2	16	2.4	409.6	119.7	8.5	35	97.3	3.9	308.1	41.5	63.5	3.8	50	9.9
HID	2	17	3.1	327.4	107.5	7.7	34.1	96.1	25.1	276.3	31	57.5	3.7	43.4	8.2
HID	2	18	3	254.4	97.6	6.8	33.1	91.6	61.3	243.1	23.7	52.3	3.6	38.1	6.8
HID	2	19	2.8	196.5	86.8	5.9	31.8	90.5	90.6	212.9	19.9	46.7	3.3	31.5	5.5
HID	2	20	3	162.3	81.7	5.3	28.4	88.9	108.9	182.6	17.4	41.7	3.1	26.7	4.3
HID	2	21	3.1	128.1	69.8	4.6	23.6	84.5	98.1	150.8	15.6	32.6	2.6	21	3.3
HID	2	22	3.3	92.7	60.2	4.1	18.3	82.6	92.4	122.6	14.7	29.6	2.3	16.1	2.7
HID	2	23	3.2	72.5	55	3.5	12	78.9	91.6	108	14.1	28.1	1.6	14	2.4
HID	2	24	3.2	61.4	49.4	3.3	10.2	78	80.6	100.3	13.8	26.8	1.1	15.8	2.3
NWC	3	1	18	9.1	98.5	6	11.8	150.1	86.2	176.5	76.9	35.1	0.6	24.8	3.2
NWC	3	2	19.8	8.2	98.6	6	10.9	149.8	84.8	175.5	77	34.1	0.6	24.8	3.2
NWC	3	3	19.8	7.7	96.8	6.3	14.5	150	84.2	187.2	78.4	35.7	0.6	26.7	3.7
NWC	3	4	21.1	9.2	103.4	7.3	21.6	151.1	83.3	217.9	81.4	40.2	0.8	32	5.1
NWC	3	5	22.7	10.6	114.9	8.8	36	157.9	83.2	273.6	90.6	48.7	1.7	45.2	7.8
NWC	3	6	29.5	13.4	152.3	11	49.2	159.9	11.3	372.2	112.4	62.9	2.2	60.8	11
NWC	3	7	39.9	19.9	194.1	13.1	61.5	162.3	5.3	483.5	137.1	78.5	2.9	78.7	14.9
NWC	3	8	40.9	25.8	220.8	14.8	71.4	164.4	2.5	558.7	158.2	90.7	3.7	88.7	17.1
NWC	3	9	36.9	30.7	231.6	15.5	79.7	171.3	1.8	591.5	170.5	97.1	4.6	92.7	18
NWC	3	10	33.3	41.1	236.4	15.7	86.6	173.1	1.8	603.6	176.4	100	4.9	94	18.3
NWC	3	11	30.6	48.6	238.8	16.1	92.9	174.9	1.8	602.2	177.8	101	4.9	94.4	18.4
NWC	3	12	27.8	57.3	240.6	16.1	97.3	181	1.8	602.2	177.7	101.1	4.9	94.1	18.3
NWC	3	13	24.5	62.1	241.4	15.8	91.1	181.7	1.8	601.1	175.8	100.9	4.9	93.5	18.3
NWC	3	14	23.9	65.5	243.5	15.6	86.3	186.8	1.9	596.2	172.1	99.8	4.9	90.3	17.5
NWC	3	15	23.6	67.5	243.7	15.3	86.4	186.4	2.9	581.1	164.1	97	4.8	86.1	16.1
NWC	3	16	22.8	67.6	244	14.2	88.7	180.2	4.9	555.4	149.7	91.7	4.7	79	14
NWC	3	17	22.8	64.3	230.6	12.9	88.4	178.6	24	511.7	129.3	82.9	4.4	67.9	10.8
NWC	3	18	19.9	51	200.4	11.4	83.4	171.8	43.4	444	105.6	73.4	4	58.7	7.9
NWC	3	19	14.1	34.3	167	10.2	74	169.4	47.5	392.4	91.9	66.7	3.6	51.6	6
NWC	3	20	14.2	26	145	9.2	60.2	166.8	114.6	344.7	85.3	61.1	3	45.3	5
NWC	3	21	15.1	17.9	133.7	8.1	48.1	159.9	113.2	289.1	81.7	53.5	2.2	40.4	4.4
NWC	3	22	15.1	12.4	113.3	7.2	35.2	158.5	107.4	242.4	79.6	48.1	1.6	35.3	4
NWC	3	23	16.6	10.8	108.5	6.6	21.3	151.9	106	206.6	78	43.1	1.2	31.4	3.6
NWC	3	24	15.4	8.5	93.3	6.5	13.7	150.8	88.8	181.1	77.2	38.2	0.7	26.1	3.3
NWV	3	1	9.3	10.7	76.5	3	6.7	111	83	101.9	64.8	24.9	3.7	15.3	3.1
NWV	3	2	9.8	9.6	73.9	3	6.3	110.7	79.9	100.6	65.1	24.9	3.7	15.5	3.2
NWV	3	3	11	8.8	72.2	2.9	7.5	110.6	78.4	103.4	66.6	26	3.8	17.3	3.7
NWV	3	4	11.9	9.6	76.5	3.3	10.1	111.2	70.6	121.3	68.2	29.6	3.9	19.9	4.7
NWV	3	5	14.7	9.7	81.2	4.1	15.7	116.7	65.8	160	71.4	36.6	3.9	22.8	6.2
NWV	3	6	16.5	12.4	109.3	5.3	23.8	117.3	7.6	221.2	79.1	45.2	4	27.3	8.5
NWV	3	7	23.8	14.3	126.5	6.6	34.2	119.2	3.7	287.2	92.4	54.5	4.1	34.6	10.8
NWV	3	8	19.8	18.9	144.1	7.8	44	120.9	1.1	342.2	104.1	62.1	4.1	38.3	11.8
NWV	3	9	11.3	28.4	149.8	8.6	53.3	127.5	1.1	367.1	112.1	66.2	4.1	40.3	12.3
NWV	3	10	7.6	37.2	156.2	8.9	65.5	129.5	1.1	372.5	115.9	68.7	4.1	41.4	12.5
NWV	3	11	6.1	48.8	159.2	9.1	75.5	131.3	1.1	375.5	116.7	69.5	4.1	42	12.5
NWV	3	12	5.8	59.3	160.5	9	73.3	137	1.1	375.7	116.9	69.3	4.1	42.1	12.6
NWV	3	13	5.1	69.7	161.6	8.7	67.3	137.7	1.1	373.6	115	68.5	4.1	41.9	12.5
NWV	3	14	4.4	74.6	163.9	8.6	62.2	142.6	1.1	368.9	112.2	67.5	4.1	41.5	12.4
NWV	3	15	4.3	76.3	156.4	8.3	58.3	142.4	1.1	359.4	107.6	65.8	4.1	40.5	11.9
NWV	3	16	4.4	71.6	151.7	7.8	59.9	136.8	2.9	338.6	101.1	62.4	4.1	37.9	10.5
NWV	3	17	4.9	65.9	141.9	7.1	65.5	135.7	7.5	293.9	92	57.9	4.1	35.1	8.9
NWV	3	18	5.4	53.2	127.3	6.2	64.4	129.5	19	259.9	82.7	52.9	4	32.4	7.4
NWV	3	19	4.6	37.8	114.4	5.3	55.5	127.6	40.1	227.6	76.1	47.9	4	29	6.3
NWV	3	20	7.9	25.8	108.8	4.6	45.8	125.7	95.6	207.1	72	43	4	25.3	5.5
NWV	3	21	8	19.3	101.1	3.9	31.7	119.4	92.2	178.5	68.8	38	3.9	22.8	4.9
NWV	3	22	9.2	14.6	90.4	3.4	20.1	118.1	88.8	143	66.9	32.8	3.7	18.5	4.2
NWV	3	23	8.7	12.2	84.6	3.1	12.3	112.5	88	121.2	65.8	29.1	3.7	16.6	3.7
NWV	3	24	8.9	10.7	77.1	3	7.8	111.6	83.5	103.2	65.3	25.9	3.7	15.8	3.3
NWI	3	1	2.1	7.5	39.8	0.9	2.8	107.3	55.8	49.5	11	16.6	0.3	9.8	2
NWI	3	2	1.5	5.6	38.9	0.9	3.1	106.6	55.4	49.6	11.1	16.3	0.3	10.1	2.1
NWI	3	3	1.8	5	39.8	0.9	4.6	106.3	55.4	53	11.8	18.2	0.3	11.2	2.7
NWI	3	4	1.8	4.8	42.2	1.3	8	106.6	54.5	68	14.6	24.9	0.5	14.8	4.4
NWI	3	5	1.7	5.7	44.9	1.7	14.4	111.8	54	100.8	20.9	36.2	0.6	20.9	6.5
NWI	3	6	3.9	8.5	57.6	2.1	23.9	112.4	50	157.5	32.9	47.8	0.7	28.2	9.2
NWI	3	7	4.5	12.3	69.6	2.5	29.5	114.5	0.6	209.8	47.2	57.3	0.8	33.4	11.8
NWI	3	8	2.9	23	78.8	2.8	32.6	116.9	0.3	244.2	54.8	64.4	0.8	36.4	13.4
NWI	3	9	1.3	33.9	83.2	3	35.3	124.6	0.3	257.8	58.6	68.1	0.8	37.4	14

Climate	Day	Hour	Heat	Cool	Vent	WH	Cook	Refrig	ExtLight	IntLight	Office	Misc	Proc.	Motors	Comp
NWI	3	10	1.2	48.6	87.3	3	37.5	127.2	0.3	265.8	58.5	70	0.8	37.7	14.2
NWI	3	11	0.8	56.8	90.2	3.1	39.4	128.9	0.3	265.8	55.7	70.4	0.8	37.7	14.2
NWI	3	12	0.8	62.6	91.6	3.1	38.4	134.8	0.3	266.4	53.6	70.1	0.8	37.6	14.2
NWI	3	13	0.7	67	92.3	3	34.1	135.7	0.3	263	52.2	69.3	0.8	37.3	14.1
NWI	3	14	0.7	71.2	93.6	2.9	31.5	140.5	1.1	256.8	50.6	67.7	0.8	36.3	13.8
NWI	3	15	0.8	74.2	93.6	2.6	29.7	140.1	1.2	248.8	46.9	64.5	0.7	32.8	12.6
NWI	3	16	0.7	72.4	91.7	2.3	28.2	133.7	0.6	229.9	40	59.2	0.6	27.2	10
NWI	3	17	1.1	57.6	79.1	1.9	26.9	132.6	14.1	200.8	29.5	51.5	0.6	22.3	7.4
NWI	3	18	1.1	41.5	70.2	1.6	25.5	126	25.6	165.3	23	44.5	0.6	19.2	5.6
NWI	3	19	1.1	32.1	62.1	1.5	23	125.3	82.3	148.2	19.5	39.7	0.5	16.8	4.6
NWI	3	20	1.2	26	58.2	1.4	20.1	124.2	80.7	126.5	16.6	34.5	0.4	14.8	3.7
NWI	3	21	1.4	21.3	54.3	1.3	15.3	117.7	79.6	103.7	14.2	29.9	0.3	13.3	3.1
NWI	3	22	1.9	14.8	48.8	1.2	10.1	115.2	69.8	80.9	13.1	25.8	0.4	11.9	2.8
NWI	3	23	2.1	10.7	44.2	1.1	5.5	109.5	62.7	63.2	11.9	21	0.3	10.5	2.4
NWI	3	24	2.2	8.2	40.3	1	3.6	108.3	58	51.6	11.1	18.5	0.3	10.1	2.2
RMN	3	1	9.3	3.6	76.5	3	6.7	111	83	101.9	64.8	24.9	3.7	15.3	3.1
RMN	3	2	9.8	3.2	73.9	3	6.3	110.7	79.9	100.6	65.1	24.9	3.7	15.5	3.2
RMN	3	3	11	2.9	72.2	2.9	7.5	110.6	78.4	103.4	66.6	26	3.8	17.3	3.7
RMN	3	4	11.9	3.2	76.5	3.3	10.1	111.2	70.6	121.3	68.2	29.6	3.9	19.9	4.7
RMN	3	5	14.7	3.2	81.2	4.1	15.7	116.7	65.8	160	71.4	36.6	3.9	22.8	6.2
RMN	3	6	16.5	4.1	109.3	5.3	23.8	117.3	7.6	221.2	79.1	45.2	4	27.3	8.5
RMN	3	7	23.8	4.8	126.5	6.6	34.2	119.2	3.7	287.2	92.4	54.5	4.1	34.6	10.8
RMN	3	8	19.8	6.3	144.1	7.8	44	120.9	1.1	342.2	104.1	62.1	4.1	38.3	11.8
RMN	3	9	11.3	9.5	149.8	8.6	53.3	127.5	1.1	367.1	112.1	66.2	4.1	40.3	12.3
RMN	3	10	7.6	12.4	156.2	8.9	65.5	129.5	1.1	372.5	115.9	68.7	4.1	41.4	12.5
RMN	3	11	6.1	16.3	159.2	9.1	75.5	131.3	1.1	375.5	116.7	69.5	4.1	42	12.5
RMN	3	12	5.8	19.8	160.5	9	73.3	137	1.1	375.7	116.9	69.3	4.1	42.1	12.6
RMN	3	13	5.1	23.2	161.6	8.7	67.3	137.7	1.1	373.6	115	68.5	4.1	41.9	12.5
RMN	3	14	4.4	24.9	163.9	8.6	62.2	142.6	1.1	368.9	112.2	67.5	4.1	41.5	12.4
RMN	3	15	4.3	25.4	156.4	8.3	58.3	142.4	1.1	359.4	107.6	65.8	4.1	40.5	11.9
RMN	3	16	4.4	23.9	151.7	7.8	59.9	136.8	2.9	338.6	101.1	62.4	4.1	37.9	10.5
RMN	3	17	4.9	22	141.9	7.1	65.5	135.7	7.5	293.9	92	57.9	4.1	35.1	8.9
RMN	3	18	5.4	17.7	127.3	6.2	64.4	129.5	19	259.9	82.7	52.9	4	32.4	7.4
RMN	3	19	4.6	12.6	114.4	5.3	55.5	127.6	40.1	227.6	76.1	47.9	4	29	6.3
RMN	3	20	7.9	8.6	108.8	4.6	45.8	125.7	95.6	207.1	72	43	4	25.3	5.5
RMN	3	21	8	6.4	101.1	3.9	31.7	119.4	92.2	178.5	68.8	38	3.9	22.8	4.9
RMN	3	22	9.2	4.9	90.4	3.4	20.1	118.1	88.8	143	66.9	32.8	3.7	18.5	4.2
RMN	3	23	8.7	4.1	84.6	3.1	12.3	112.5	88	121.2	65.8	29.1	3.7	16.6	3.7
RMN	3	24	8.9	3.6	77.1	3	7.8	111.6	83.5	103.2	65.3	25.9	3.7	15.8	3.3
NCC	3	1	18	45.5	98.5	6	11.8	150.1	86.2	176.5	76.9	35.1	0.6	24.8	3.2
NCC	3	2	19.8	41.1	98.6	6	10.9	149.8	84.8	175.5	77	34.1	0.6	24.8	3.2
NCC	3	3	19.8	38.7	96.8	6.3	14.5	150	84.2	187.2	78.4	35.7	0.6	26.7	3.7
NCC	3	4	21.1	46.2	103.4	7.3	21.6	151.1	83.3	217.9	81.4	40.2	0.8	32	5.1
NCC	3	5	22.7	53.1	114.9	8.8	36	157.9	83.2	273.6	90.6	48.7	1.7	45.2	7.8
NCC	3	6	29.5	66.8	152.3	11	49.2	159.9	11.3	372.2	112.4	62.9	2.2	60.8	11
NCC	3	7	39.9	99.3	194.1	13.1	61.5	162.3	5.3	483.5	137.1	78.5	2.9	78.7	14.9
NCC	3	8	40.9	129.1	220.8	14.8	71.4	164.4	2.5	558.7	158.2	90.7	3.7	88.7	17.1
NCC	3	9	36.9	153.5	231.6	15.5	79.7	171.3	1.8	591.5	170.5	97.1	4.6	92.7	18
NCC	3	10	33.3	205.3	236.4	15.7	86.6	173.1	1.8	603.6	176.4	100	4.9	94	18.3
NCC	3	11	30.6	243.2	238.8	16.1	92.9	174.9	1.8	602.2	177.8	101	4.9	94.4	18.4
NCC	3	12	27.8	286.6	240.6	16.1	97.3	181	1.8	602.2	177.7	101.1	4.9	94.1	18.3
NCC	3	13	24.5	310.3	241.4	15.8	91.1	181.7	1.8	601.1	175.8	100.9	4.9	93.5	18.3
NCC	3	14	23.9	327.4	243.5	15.6	86.3	186.8	1.9	596.2	172.1	99.8	4.9	90.3	17.5
NCC	3	15	23.6	337.5	243.7	15.3	86.4	186.4	2.9	581.1	164.1	97	4.8	86.1	16.1
NCC	3	16	22.8	337.8	244	14.2	88.7	180.2	4.9	555.4	149.7	91.7	4.7	79	14
NCC	3	17	22.8	321.5	230.6	12.9	88.4	178.6	24	511.7	129.3	82.9	4.4	67.9	10.8
NCC	3	18	19.9	255.1	200.4	11.4	83.4	171.8	43.4	444	105.6	73.4	4	58.7	7.9
NCC	3	19	14.1	171.7	167	10.2	74	169.4	47.5	392.4	91.9	66.7	3.6	51.6	6
NCC	3	20	14.2	129.9	145	9.2	60.2	166.8	114.6	344.7	85.3	61.1	3	45.3	5
NCC	3	21	15.1	89.7	133.7	8.1	48.1	159.9	113.2	289.1	81.7	53.5	2.2	40.4	4.4
NCC	3	22	15.1	61.8	113.3	7.2	35.2	158.5	107.4	242.4	79.6	48.1	1.6	35.3	4
NCC	3	23	16.6	54.2	108.5	6.6	21.3	151.9	106	206.6	78	43.1	1.2	31.4	3.6
NCC	3	24	15.4	42.7	93.3	6.5	13.7	150.8	88.8	181.1	77.2	38.2	0.7	26.1	3.3
NCV	3	1	2.1	24.9	39.8	0.9	2.8	107.3	55.8	49.5	11	16.6	0.3	9.8	2
NCV	3	2	1.5	18.6	38.9	0.9	3.1	106.6	55.4	49.6	11.1	16.3	0.3	10.1	2.1
NCV	3	3	1.8	16.6	39.8	0.9	4.6	106.3	55.4	53	11.8	18.2	0.3	11.2	2.7
NCV	3	4	1.8	15.9	42.2	1.3	8	106.6	54.5	68	14.6	24.9	0.5	14.8	4.4
NCV	3	5	1.7	19.1	44.9	1.7	14.4	111.8	54	100.8	20.9	36.2	0.6	20.9	6.5
NCV	3	6	3.9	28.4	57.6	2.1	23.9	112.4	50	157.5	32.9	47.8	0.7	28.2	9.2
NCV	3	7	4.5	40.9	69.6	2.5	29.5	114.5	0.6	209.8	47.2	57.3	0.8	33.4	11.8
NCV	3	8	2.9	76.8	78.8	2.8	32.6	116.9	0.3	244.2	54.8	64.4	0.8	36.4	13.4
NCV	3	9	1.3	113.1	83.2	3	35.3	124.6	0.3	257.8	58.6	68.1	0.8	37.4	14
NCV	3	10	1.2	162.1	87.3	3	37.5	127.2	0.3	265.8	58.5	70	0.8	37.7	14.2
NCV	3	11	0.8	189.4	90.2	3.1	39.4	128.9	0.3	265.8	55.7	70.4	0.8	37.7	14.2
NCV	3	12	0.8	208.6	91.6	3.1	38.4	134.8	0.3	266.4	53.6	70.1	0.8	37.6	14.2
NCV	3	13	0.7	223.4	92.3	3	34.1	135.7	0.3	263	52.2	69.3	0.8	37.3	14.1
NCV	3	14	0.7	237.3	93.6	2.9	31.5	140.5	1.1	256.8	50.6	67.7	0.8	36.3	13.8
NCV	3	15	0.8	247.2	93.6	2.6	29.7	140.1	1.2	248.8	46.9	64.5	0.7	32.8	12.6
NCV	3	16	0.7	241.4	91.7	2.3	28.2	133.7	0.6	229.9	40	59.2	0.6	27.2	10
NCV	3	17	1.1	192	79.1	1.9	26.9	132.6	14.1	200.8	29.5	51.5	0.6	22.3	7.4
NCV	3	18	1.1	138.4	70.2	1.6	25.5	126	25.6	165.3	23	44.5	0.6	19.2	5.6
NCV	3	19	1.1	107	62.1	1.5	23	125.3	82.3	148.2	19.5	39.7	0.5	16.8	4.6
NCV	3	20	1.2	86.7	58.2	1.4	20.1	124.2	80.7	126.5	16.6	34.5	0.4	14.8	3.7
NCV	3	21	1.4	71.1	54.3	1.3	15.3	117.7	79.6	103.7	14.2	29.9	0.3	13.3	3.1
NCV	3	22	1.9	49.4	48.8	1.2	10.1	115.2	69.8	80.9	13.1	25.8	0.4	11.9	2.8
NCV	3	23	2.1	35.8	44.2	1.1	5.5	109.5	62.7	63.2	11.9	21	0.3	10.5	2.4
NCV	3	24	2.2	27.4	40.3	1	3.6	108.3	58	51.6	11.1	18.5	0.3	10.1	2.2
NCI	3	1	9.3	35.8	76.5	3	6.7	111	83	101.9	64.8	24.9	3.7	15.3	3.1
NCI	3	2	9.8	31.9	73.9	3	6.3	110.7	79.9	100.6	65.1	24.9	3.7	15.5	3.2
NCI	3	3	11	29.3	72.2	2.9	7.5	110.6	78.4	103.4	66.6	26	3.8	17.3	3.7
NCI	3	4	11.9	32.1	76.5	3.3	10.1	111.2	70.6	121.3	68.2	29.6	3.9	19.9	4.7
NCI	3	5	14.7	32.3	81.2	4.1	15.7	116.7	65.8	160	71.4	36.6	3.9	22.8	6.2
NCI	3	6	16.5	41.2	109.3	5.3	23.8	117.3	7.6	221.2	79.1	45.2	4	27.3	8.5
NCI	3	7	23.8	47.8	126.5	6.6	34.2	119.2	3.7	287.2	92.4	54.5	4.1	34.6	10.8
NCI	3	8	19.8	62.9	144.1	7.8	44	120.9	1.1	342.2	104.1	62.1	4.1	38.3	11.8

Climate	Day	Hour	Heat	Cool	Vent	WH	Cook	Refrig	ExtLight	IntLight	Office	Misc	Proc.	Motors	Comp
NCI	3	9	11.3	94.7	149.8	8.6	53.3	127.5	1.1	367.1	112.1	66.2	4.1	40.3	12.3
NCI	3	10	7.6	124.1	156.2	8.9	65.5	129.5	1.1	372.5	115.9	68.7	4.1	41.4	12.5
NCI	3	11	6.1	162.6	159.2	9.1	75.5	131.3	1.1	375.5	116.7	69.5	4.1	42	12.5
NCI	3	12	5.8	197.5	160.5	9	73.3	137	1.1	375.7	116.9	69.3	4.1	42.1	12.6
NCI	3	13	5.1	232.4	161.6	8.7	67.3	137.7	1.1	373.6	115	68.5	4.1	41.9	12.5
NCI	3	14	4.4	248.6	163.9	8.6	62.2	142.6	1.1	368.9	112.2	67.5	4.1	41.5	12.4
NCI	3	15	4.3	254.5	156.4	8.3	58.3	142.4	1.1	359.4	107.6	65.8	4.1	40.5	11.9
NCI	3	16	4.4	238.7	151.7	7.8	59.9	136.8	2.9	338.6	101.1	62.4	4.1	37.9	10.5
NCI	3	17	4.9	219.6	141.9	7.1	65.5	135.7	7.5	293.9	92	57.9	4.1	35.1	8.9
NCI	3	18	5.4	177.3	127.3	6.2	64.4	129.5	19	259.9	82.7	52.9	4	32.4	7.4
NCI	3	19	4.6	126.1	114.4	5.3	55.5	127.6	40.1	227.6	76.1	47.9	4	29	6.3
NCI	3	20	7.9	86.1	108.8	4.6	45.8	125.7	95.6	207.1	72	43	4	25.3	5.5
NCI	3	21	8	64.5	101.1	3.9	31.7	119.4	92.2	178.5	68.8	38	3.9	22.8	4.9
NCI	3	22	9.2	48.7	90.4	3.4	20.1	118.1	88.8	143	66.9	32.8	3.7	18.5	4.2
NCI	3	23	8.7	40.5	84.6	3.1	12.3	112.5	88	121.2	65.8	29.1	3.7	16.6	3.7
NCI	3	24	8.9	35.8	77.1	3	7.8	111.6	83.5	103.2	65.3	25.9	3.7	15.8	3.3
SCC	3	1	7.2	47.6	109.2	8	11	153.7	141.7	190.8	66.1	33.5	8.3	20.8	4
SCC	3	2	7.8	45.3	106.7	7.8	10.3	153.1	139.5	187.4	66.1	32.9	8.4	20.4	4
SCC	3	3	7.5	43.6	106	7.8	12	153.1	134.4	193.6	68	34.2	8.5	20.9	4.4
SCC	3	4	8.6	43	112.9	8.5	18.2	154.4	133.2	227	72.2	38.9	8.7	25.9	6
SCC	3	5	8.8	59.8	124.5	10.8	34.4	161.7	131.5	316.7	85.5	52.1	9.2	43	10.4
SCC	3	6	21.3	93.7	165.1	14.8	52.1	164.6	6.3	438.8	110.2	71.2	10.3	66.6	16.5
SCC	3	7	26.2	130.4	205	19.1	63.9	167.2	3.9	571.3	141.5	90.7	12.8	90.2	23.2
SCC	3	8	24.2	169.3	226.7	22.6	70.6	169.9	3.8	683.6	166.9	104.4	14.4	104.6	27.4
SCC	3	9	20.9	209.9	237.4	24.2	76.8	177.2	3.8	730.7	183.1	113.3	15.4	109.9	29.3
SCC	3	10	19.3	248	251.4	24.8	85.4	178.4	3.8	742	189.3	116.4	15.9	112.1	30.1
SCC	3	11	18	266.8	254.5	25.7	91.2	178.9	3.8	741.5	190.5	119	15.9	112.5	30.2
SCC	3	12	16.9	281.6	255.5	25.8	90.7	183.9	3.8	743.5	190.1	119.5	15.9	112.3	30.2
SCC	3	13	15.2	296.8	258.2	25	84.8	184.1	3.8	745.4	187.3	117.9	15.9	111.6	29.8
SCC	3	14	14.8	311.9	260.9	24.4	79.4	189.1	3.8	743.1	182.8	115.7	15.8	107.1	28
SCC	3	15	14.5	319	256.7	23.2	77.8	188.9	4.4	727.3	172.7	111.3	15.3	99.9	25.4
SCC	3	16	15.2	311.5	248.7	21.5	79.2	182.7	8.3	687	157.2	104	13.6	86.4	21
SCC	3	17	15.9	282.2	237.1	19.4	80.4	181.1	33.3	633.7	132.8	93.6	12.5	70.8	15.7
SCC	3	18	13.4	228	211.2	17.1	74	174.2	79.3	557.3	107.2	80	11.3	58.8	11.5
SCC	3	19	12.2	158.1	176.4	15.1	65.2	172.1	85.6	489.9	90.4	68.7	10.4	50.5	8.8
SCC	3	20	13.8	122.7	156.9	13.6	53.3	170.3	169.4	421.5	82	58	9.6	43.9	7.3
SCC	3	21	15.6	100.7	145.5	11.7	42.2	163.8	168.1	340.2	75.5	49.9	9.1	38.2	6.1
SCC	3	22	16.7	80.1	134.7	10.2	31.5	162.3	159.7	282.9	71.1	43.9	8.8	32.3	5
SCC	3	23	7	59.7	116.5	9	18.6	155.9	153	230.7	67.9	38.1	8.6	25.5	4.4
SCC	3	24	7.9	51.3	106.3	8.3	13.1	154.5	146.3	197.2	66.5	35.1	8.4	22.3	4.1
SCV	3	1	7.2	95.3	109.2	8	11	153.7	141.7	190.8	66.1	33.5	8.3	20.8	4
SCV	3	2	7.8	90.5	106.7	7.8	10.3	153.1	139.5	187.4	66.1	32.9	8.4	20.4	4
SCV	3	3	7.5	87.1	106	7.8	12	153.1	134.4	193.6	68	34.2	8.5	20.9	4.4
SCV	3	4	8.6	86	112.9	8.5	18.2	154.4	133.2	227	72.2	38.9	8.7	25.9	6
SCV	3	5	8.8	119.6	124.5	10.8	34.4	161.7	131.5	316.7	85.5	52.1	9.2	43	10.4
SCV	3	6	21.3	187.5	165.1	14.8	52.1	164.6	6.3	438.8	110.2	71.2	10.3	66.6	16.5
SCV	3	7	26.2	260.8	205	19.1	63.9	167.2	3.9	571.3	141.5	90.7	12.8	90.2	23.2
SCV	3	8	24.2	338.5	226.7	22.6	70.6	169.9	3.8	683.6	166.9	104.4	14.4	104.6	27.4
SCV	3	9	20.9	419.9	237.4	24.2	76.8	177.2	3.8	730.7	183.1	113.3	15.4	109.9	29.3
SCV	3	10	19.3	496	251.4	24.8	85.4	178.4	3.8	742	189.3	116.4	15.9	112.1	30.1
SCV	3	11	18	533.6	254.5	25.7	91.2	178.9	3.8	741.5	190.5	119	15.9	112.5	30.2
SCV	3	12	16.9	563.2	255.5	25.8	90.7	183.9	3.8	743.5	190.1	119.5	15.9	112.3	30.2
SCV	3	13	15.2	593.5	258.2	25	84.8	184.1	3.8	745.4	187.3	117.9	15.9	111.6	29.8
SCV	3	14	14.8	623.9	260.9	24.4	79.4	189.1	3.8	743.1	182.8	115.7	15.8	107.1	28
SCV	3	15	14.5	638.1	256.7	23.2	77.8	188.9	4.4	727.3	172.7	111.3	15.3	99.9	25.4
SCV	3	16	15.2	623	248.7	21.5	79.2	182.7	8.3	687	157.2	104	13.6	86.4	21
SCV	3	17	15.9	564.4	237.1	19.4	80.4	181.1	33.3	633.7	132.8	93.6	12.5	70.8	15.7
SCV	3	18	13.4	456.1	211.2	17.1	74	174.2	79.3	557.3	107.2	80	11.3	58.8	11.5
SCV	3	19	12.2	316.3	176.4	15.1	65.2	172.1	85.6	489.9	90.4	68.7	10.4	50.5	8.8
SCV	3	20	13.8	245.3	156.9	13.6	53.3	170.3	169.4	421.5	82	58	9.6	43.9	7.3
SCV	3	21	15.6	201.4	145.5	11.7	42.2	163.8	168.1	340.2	75.5	49.9	9.1	38.2	6.1
SCV	3	22	16.7	160.2	134.7	10.2	31.5	162.3	159.7	282.9	71.1	43.9	8.8	32.3	5
SCV	3	23	7	119.4	116.5	9	18.6	155.9	153	230.7	67.9	38.1	8.6	25.5	4.4
SCV	3	24	7.9	102.6	106.3	8.3	13.1	154.5	146.3	197.2	66.5	35.1	8.4	22.3	4.1
SCI	3	1	7.2	66.7	109.2	8	11	153.7	141.7	190.8	66.1	33.5	8.3	20.8	4
SCI	3	2	7.8	63.4	106.7	7.8	10.3	153.1	139.5	187.4	66.1	32.9	8.4	20.4	4
SCI	3	3	7.5	61	106	7.8	12	153.1	134.4	193.6	68	34.2	8.5	20.9	4.4
SCI	3	4	8.6	60.2	112.9	8.5	18.2	154.4	133.2	227	72.2	38.9	8.7	25.9	6
SCI	3	5	8.8	83.7	124.5	10.8	34.4	161.7	131.5	316.7	85.5	52.1	9.2	43	10.4
SCI	3	6	21.3	131.2	165.1	14.8	52.1	164.6	6.3	438.8	110.2	71.2	10.3	66.6	16.5
SCI	3	7	26.2	182.6	205	19.1	63.9	167.2	3.9	571.3	141.5	90.7	12.8	90.2	23.2
SCI	3	8	24.2	237	226.7	22.6	70.6	169.9	3.8	683.6	166.9	104.4	14.4	104.6	27.4
SCI	3	9	20.9	293.9	237.4	24.2	76.8	177.2	3.8	730.7	183.1	113.3	15.4	109.9	29.3
SCI	3	10	19.3	347.2	251.4	24.8	85.4	178.4	3.8	742	189.3	116.4	15.9	112.1	30.1
SCI	3	11	18	373.5	254.5	25.7	91.2	178.9	3.8	741.5	190.5	119	15.9	112.5	30.2
SCI	3	12	16.9	394.3	255.5	25.8	90.7	183.9	3.8	743.5	190.1	119.5	15.9	112.3	30.2
SCI	3	13	15.2	415.5	258.2	25	84.8	184.1	3.8	745.4	187.3	117.9	15.9	111.6	29.8
SCI	3	14	14.8	436.7	260.9	24.4	79.4	189.1	3.8	743.1	182.8	115.7	15.8	107.1	28
SCI	3	15	14.5	446.7	256.7	23.2	77.8	188.9	4.4	727.3	172.7	111.3	15.3	99.9	25.4
SCI	3	16	15.2	436.1	248.7	21.5	79.2	182.7	8.3	687	157.2	104	13.6	86.4	21
SCI	3	17	15.9	395.1	237.1	19.4	80.4	181.1	33.3	633.7	132.8	93.6	12.5	70.8	15.7
SCI	3	18	13.4	319.2	211.2	17.1	74	174.2	79.3	557.3	107.2	80	11.3	58.8	11.5
SCI	3	19	12.2	221.4	176.4	15.1	65.2	172.1	85.6	489.9	90.4	68.7	10.4	50.5	8.8
SCI	3	20	13.8	171.7	156.9	13.6	53.3	170.3	169.4	421.5	82	58	9.6	43.9	7.3
SCI	3	21	15.6	141	145.5	11.7	42.2	163.8	168.1	340.2	75.5	49.9	9.1	38.2	6.1
SCI	3	22	16.7	112.1	134.7	10.2	31.5	162.3	159.7	282.9	71.1	43.9	8.8	32.3	5
SCI	3	23	7	83.6	116.5	9	18.6	155.9	153	230.7	67.9	38.1	8.6	25.5	4.4
SCI	3	24	7.9	71.8	106.3	8.3	13.1	154.5	146.3	197.2	66.5	35.1	8.4	22.3	4.1
DSW	3	1	4.1	27.1	41.5	3.5	5.7	75.8	79.6	97	13.7	25.5	1.1	15.8	2.3
DSW	3	2	4.6	24.6	41.5	3.6	3.7	75.4	77.1	97.5	13.8	25.1	1.1	17.1	2.6
DSW	3	3	4.8	24.4	42.6	3.8	5	75.4	72.5	103.9	14.4	26.4	1.5	22.4	3.7
DSW	3	4	4.9	26.6	44.3	4.6	8.8	76.1	71.1	125.2	15.9	30.1	2.6	28.6	4.8
DSW	3	5	5.4	27.7	47.5	5.8	16.8	79.8	66.5	164.3	19.5	35.6	3.2	35.2	6.4
DSW	3	6	5.8	45.2	59.7	7.3	25.3	81.5	6.1	228.3	27.3	45.2	3.7	37.7	8.2
DSW	3	7	4.8	76.4	77.7	8.8	30.2	83.5	1	284.5	39.6	56.3	3.9	43.8	9.9

Climate	Day	Hour	Heat	Cool	Vent	WH	Cook	Refrig	ExtLight	IntLight	Office	Misc	Proc.	Motors	Comp
DSW	3	8	4.8	125.7	94.5	9.8	34.3	85.8	0.6	332.7	48.4	66	4	50.6	11.3
DSW	3	9	4.3	165.3	98.1	10.4	39.7	91.1	0.6	349.1	54	70	4.2	56.3	12
DSW	3	10	4	208.9	111.9	10.5	42.6	92.7	0.6	350.2	56.2	72.4	4.2	57.4	12.3
DSW	3	11	3.7	241.3	112.5	10.7	44.4	93.5	0.6	348.2	56.7	73	4.2	56.8	12.3
DSW	3	12	3.4	261	113.1	10.7	44.3	96.7	0.6	348.5	56.7	73	4.2	56.8	12.3
DSW	3	13	3.3	291.9	113.5	10.4	40.4	97	0.6	347	56.2	72.4	4.2	55.2	12.3
DSW	3	14	3.1	304.9	113.2	10.2	37.6	100	0.6	343	53.6	71	4	54.7	12.2
DSW	3	15	2.9	327.9	113.8	9.9	35.4	99.6	0.6	333.4	48.6	68.2	4	53.2	11.5
DSW	3	16	2.9	314.2	110.6	9.3	35.1	95.7	3.9	310.2	41.8	62.9	3.8	49.9	9.8
DSW	3	17	3	265	101	8.4	34.2	94.6	25.1	277.6	31.3	56.9	3.7	43.1	8.2
DSW	3	18	3.3	203.4	93.6	7.4	33.1	90.3	61.3	243.1	24.1	51.8	3.6	37.8	6.7
DSW	3	19	3.4	149	83.1	6.4	31.7	88.9	70.3	213.4	20.2	46.3	3.2	31.3	5.4
DSW	3	20	3.8	109.8	77	5.7	28.2	87.1	108.9	183.4	17.6	41.4	3.1	26.5	4.3
DSW	3	21	4	74.3	65	5	23.3	82.7	98.1	151.5	15.7	32.3	2.6	20.9	3.2
DSW	3	22	4.1	53.7	54.3	4.4	17.9	81.1	92.4	122.7	14.8	29.3	2.3	16	2.6
DSW	3	23	3.7	37.6	48.7	3.8	11.6	77.4	91.6	108.4	14.1	27.8	1.6	13.9	2.4
DSW	3	24	3.8	33.7	44.4	3.6	10	76.4	80.6	101.1	13.9	26.6	1.1	16.3	2.3
HID	3	1	4.1	13.5	41.5	3.5	5.7	75.8	79.6	97	13.7	25.5	1.1	15.8	2.3
HID	3	2	4.6	12.3	41.5	3.6	3.7	75.4	77.1	97.5	13.8	25.1	1.1	17.1	2.6
HID	3	3	4.8	12.2	42.6	3.8	5	75.4	72.5	103.9	14.4	26.4	1.5	22.4	3.7
HID	3	4	4.9	13.3	44.3	4.6	8.8	76.1	71.1	125.2	15.9	30.1	2.6	28.6	4.8
HID	3	5	5.4	13.9	47.5	5.8	16.8	79.8	66.5	164.3	19.5	35.6	3.2	35.2	6.4
HID	3	6	5.8	22.6	59.7	7.3	25.3	81.5	6.1	228.3	27.3	45.2	3.7	37.7	8.2
HID	3	7	4.8	38.2	77.7	8.8	30.2	83.5	1	284.5	39.6	56.3	3.9	43.8	9.9
HID	3	8	4.8	62.9	94.5	9.8	34.3	85.8	0.6	332.7	48.4	66	4	50.6	11.3
HID	3	9	4.3	82.6	98.1	10.4	39.7	91.1	0.6	349.1	54	70	4.2	56.3	12
HID	3	10	4	104.4	111.9	10.5	42.6	92.7	0.6	350.2	56.2	72.4	4.2	57.4	12.3
HID	3	11	3.7	120.7	112.5	10.7	44.4	93.5	0.6	348.2	56.7	73	4.2	56.8	12.3
HID	3	12	3.4	130.5	113.1	10.7	44.3	96.7	0.6	348.5	56.7	73	4.2	56.8	12.3
HID	3	13	3.3	146	113.5	10.4	40.4	97	0.6	347	56.2	72.4	4.2	55.2	12.3
HID	3	14	3.1	152.5	113.2	10.2	37.6	100	0.6	343	53.6	71	4	54.7	12.2
HID	3	15	2.9	163.9	113.8	9.9	35.4	99.6	0.6	333.4	48.6	68.2	4	53.2	11.5
HID	3	16	2.9	157.1	110.6	9.3	35.1	95.7	3.9	310.2	41.8	62.9	3.8	49.9	9.8
HID	3	17	3	132.5	101	8.4	34.2	94.6	25.1	277.6	31.3	56.9	3.7	43.1	8.2
HID	3	18	3.3	101.7	93.6	7.4	33.1	90.3	61.3	243.1	24.1	51.8	3.6	37.8	6.7
HID	3	19	3.4	74.5	83.1	6.4	31.7	88.9	70.3	213.4	20.2	46.3	3.2	31.3	5.4
HID	3	20	3.8	54.9	77	5.7	28.2	87.1	108.9	183.4	17.6	41.4	3.1	26.5	4.3
HID	3	21	4	37.1	65	5	23.3	82.7	98.1	151.5	15.7	32.3	2.6	20.9	3.2
HID	3	22	4.1	26.8	54.3	4.4	17.9	81.1	92.4	122.7	14.8	29.3	2.3	16	2.6
HID	3	23	3.7	18.8	48.7	3.8	11.6	77.4	91.6	108.4	14.1	27.8	1.6	13.9	2.4
HID	3	24	3.8	16.8	44.4	3.6	10	76.4	80.6	101.1	13.9	26.6	1.1	16.3	2.3
NWC	4	1	88.4	5	105.8	7.5	13.7	145.9	88.8	186.5	76.8	38.9	0.7	25.8	3.2
NWC	4	2	97.4	4.7	105	7	11.8	145.2	86.2	174.9	76.5	35.5	0.6	24.3	3
NWC	4	3	104.5	4.2	103.6	7	10.9	144.8	84.2	174.3	76.5	34.5	0.6	24.4	3.1
NWC	4	4	108.5	4.2	105	7.3	14.6	145.1	84.2	188	78	36.5	0.6	26.6	3.7
NWC	4	5	124	4.3	113.7	8.5	21.8	146.3	83.3	222.3	81	41.7	0.8	32.5	5.2
NWC	4	6	126	4.3	119.9	10.3	37	152.9	83.2	281.4	90.3	51	1.7	46.3	8
NWC	4	7	153.5	5.5	162.1	13	52.2	154.1	11.3	387.8	112.7	66	2.2	62.7	11.2
NWC	4	8	179.3	10.4	206.8	15.6	66.6	154.8	5.3	514	138.8	82.5	3	81.6	15.2
NWC	4	9	113.5	13.3	223.1	17.8	76.5	157.1	2.5	590.4	161.5	95.2	4	92.7	17.6
NWC	4	10	98.4	17	235.7	19.2	85.1	163.3	1.8	623.5	174.9	101.9	5.1	97.5	18.4
NWC	4	11	89.9	22.6	239	20.8	91.9	164.6	1.8	633	181.1	105	5.4	99.1	18.8
NWC	4	12	84.9	25.3	241.6	22.1	99.6	166.2	1.8	629.6	182.5	105.9	5.4	99.3	18.8
NWC	4	13	79.6	30.3	243.9	22.5	104	172	1.8	630	182.3	105.9	5.2	98.5	18.8
NWC	4	14	74.8	31.7	245.5	22.2	97	173.1	1.8	634.6	180	105.5	5.1	97.6	18.7
NWC	4	15	71.9	32.8	245.3	22.1	91	178.6	1.9	630.6	175.5	104.1	5	93.9	17.9
NWC	4	16	69	33.5	243.3	21.7	90.7	178.8	2.9	613	166.5	101	4.9	89.1	16.5
NWC	4	17	71.7	31.9	239.7	20.3	91.7	173.4	4.9	578	151.4	95.4	4.8	81.5	14.3
NWC	4	18	83.9	24.8	223.5	18.6	89.7	171.9	24	527.9	130.5	86.1	4.4	69.7	11.1
NWC	4	19	72.4	17.8	184.7	16.8	84.1	165.1	109	456.9	106.6	76.2	4	60.2	8.2
NWC	4	20	50.3	10.7	158.5	15.3	74.5	162.4	112.5	401.1	92.5	69.4	3.6	52.8	6.3
NWC	4	21	48.1	9.3	144.6	13.9	60.6	160.9	114.6	352.8	85.9	63.6	3	46.4	5.3
NWC	4	22	47	7.3	136	12.3	48.4	154.7	113.2	296.3	82.1	56	2.2	41.4	4.6
NWC	4	23	46.4	5.4	114.9	10.7	35.4	153.8	107.4	244.3	79.8	50.4	1.6	36.1	4.1
NWC	4	24	54.8	4.8	110.8	8.9	21.4	147.2	106	206.7	77.7	44.6	1.2	31.7	3.6
NWV	4	1	44.8	4	80.9	3.6	7.9	96.8	82.9	106.6	65.5	25.8	3.7	13.2	3.2
NWV	4	2	50.1	3.6	83.4	3.6	6.8	96.2	82.4	102	65.1	24.9	3.7	12.5	3.1
NWV	4	3	51.8	3.6	77.9	3.5	6.4	95.9	79.2	100.7	65.4	24.8	3.7	12.7	3.1
NWV	4	4	57.3	3.5	81.5	3.5	7.5	96	78.4	103.7	66.9	25.9	3.8	14.6	3.6
NWV	4	5	61.9	3.4	84.7	3.9	10.1	96.5	70.6	122.1	68.6	29.6	3.9	17.9	4.7
NWV	4	6	69.8	3.5	89.4	4.9	15.8	101.1	66.2	161.1	71.9	36.6	3.9	21.9	6.3
NWV	4	7	74.6	4.6	116.2	6.3	24.3	101.5	7.8	224.5	79.8	45.4	4	26.6	8.8
NWV	4	8	85.5	5.3	130.6	7.8	35.1	100.8	3.7	291	93.6	54.8	4.1	34.1	11.1
NWV	4	9	74.1	7.3	150.9	9.4	45.7	102.4	1.1	350.5	105.8	62.6	4.1	37.9	12.3
NWV	4	10	46.6	10.6	155	10.3	55.3	107.9	1.1	375.7	114	66.9	4.1	40.2	12.8
NWV	4	11	50.2	13.9	155.9	10.7	67.5	109.9	1.1	380.9	117.8	69.4	4.1	41.3	13
NWV	4	12	35.3	16.1	157.6	10.9	77.8	111.8	1.1	383.4	118.6	70.3	4.1	42	13.1
NWV	4	13	28.4	18.1	158.4	10.8	75.3	116.7	1.1	383.6	118.8	70	4.1	42	13.1
NWV	4	14	26.3	19.9	158.4	10.4	67.7	117.6	1.1	381.1	116.6	69.2	4.1	41.9	13.1
NWV	4	15	26.3	20.4	158.4	10.2	62.4	121.9	1.1	375.9	113.4	68.1	4.1	41.5	12.9
NWV	4	16	23.2	20.6	150	9.9	58.3	122	1.1	366	108.5	66.2	4.1	40.6	12.3
NWV	4	17	26.8	18.9	144.6	9.4	60.1	117.9	2.9	345	101.8	62.6	4.1	38.1	10.8
NWV	4	18	36.2	13.9	131	8.5	66.3	117	8.2	297	92.6	57.9	4.1	35.2	9
NWV	4	19	42.8	10.5	119.6	7.4	65.2	111.6	72.8	265	83.1	52.9	4	32.5	7.4
NWV	4	20	44.7	7.4	108.4	6.3	55.8	109.4	93.5	231.7	76.5	47.8	4	28.8	6.3
NWV	4	21	36.8	6.4	106.9	5.4	46	108	95.7	207	72.5	42.9	4	24	5.5
NWV	4	22	38.6	5.6	100	4.7	31.9	103.5	92.2	178.3	69.2	37.9	3.9	20.7	4.9
NWV	4	23	36.5	4.6	88.7	4.1	20.2	102.6	88.8	143.1	67.3	32.7	3.7	16.9	4.2
NWV	4	24	37.1	4.2	84.1	3.7	12.4	97.7	87.3	121.1	66.1	29	3.7	14.4	3.7
NWI	4	1	8.4	0.7	44.4	1.6	3.6	76.1	58	52.5	11.3	18.1	0.3	7.3	1.9
NWI	4	2	9.9	0.7	43.7	1.4	2.8	75.5	55.8	49	11.1	16.1	0.3	7	1.7
NWI	4	3	13.2	0.6	43.6	1.4	3.1	75.1	55.4	49	11.3	15.8	0.3	7.2	1.8
NWI	4	4	17.4	0.6	44.2	1.5	4.6	75.1	55.4	52.3	12	17.7	0.3	8.2	2.4
NWI	4	5	23.4	0.7	44.6	2	7.9	75.5	54.5	67.3	14.6	24.5	0.5	11.8	4
NWI	4	6	23.3	0.8	46.2	2.7	14.3	79.2	54	100.3	20.9	35.8	0.6	17.5	6.3

Climate	Day	Hour	Heat	Cool	Vent	WH	Cook	Refrig	ExtLight	IntLight	Office	Misc	Proc.	Motors	Comp
NWI	4	7	42.7	1	53.1	3.4	23.9	79.6	9.8	157.2	33	47.7	0.7	24.2	9.5
NWI	4	8	42.7	1.4	64.1	4	29.5	80.3	0.6	209.7	47.2	57.5	0.8	29.2	12.6
NWI	4	9	39.5	2.1	70.2	4.5	32.6	81.7	0.3	243.5	54.8	64.7	0.8	32.1	14.4
NWI	4	10	28.2	3.2	71.3	4.7	35.2	85.9	0.3	256.2	58.6	68.4	0.8	33.1	15
NWI	4	11	23.7	4.9	73.1	4.8	37.5	87.3	0.3	263.4	58.4	70.2	0.8	33.3	15.2
NWI	4	12	21.3	7.3	75	4.9	39.4	88.4	0.3	263.4	55.7	70.6	0.8	33.3	15.2
NWI	4	13	19.7	8.2	75.6	4.9	38.4	92.2	0.3	264.2	53.5	70.3	0.8	33.2	15.2
NWI	4	14	18.5	8.4	75.1	4.8	34.1	92.9	0.3	260.8	52.2	69.5	0.8	33	15.1
NWI	4	15	15.9	8.8	74.6	4.5	31.5	96.3	1.1	254	50.6	67.9	0.8	32.2	14.8
NWI	4	16	9.5	8.2	74.5	4.2	29.7	96.7	1.2	245.9	46.9	64.7	0.7	29.5	13.7
NWI	4	17	10.1	7.5	72.9	3.6	28.2	93.6	0.6	227.4	40	59.4	0.7	24.8	11.3
NWI	4	18	14.7	5.1	62.6	3	26.8	93.1	14.1	199.1	29.6	51.8	0.6	20.4	8.7
NWI	4	19	8.6	3.8	57.2	2.6	25.5	89.1	65.8	164.6	23	44.7	0.6	17.4	6.8
NWI	4	20	8.9	2.6	54.9	2.3	23	87.7	82.3	148.1	19.6	39.9	0.6	15.1	5.7
NWI	4	21	6.7	1.6	52	2.2	20	86.6	80.7	126.4	16.7	34.5	0.4	13.1	4.8
NWI	4	22	7.8	1.2	50.9	2	15.3	82.4	79.6	103.5	14.3	29.9	0.3	11.4	4
NWI	4	23	8.1	0.8	46.2	1.9	10.1	81.1	69.8	80.9	13.2	25.7	0.4	9.8	3.4
NWI	4	24	9.1	0.7	47.1	1.7	5.5	77.1	62.7	63.1	12	20.7	0.3	7.9	2.4
RMN	4	1	112.1	4	80.9	3.6	7.9	96.8	82.9	106.6	65.5	25.8	3.7	13.2	3.2
RMN	4	2	125.1	3.6	83.4	3.6	6.8	96.2	82.4	102	65.1	24.9	3.7	12.5	3.1
RMN	4	3	129.4	3.6	77.9	3.5	6.4	95.9	79.2	100.7	65.4	24.8	3.7	12.7	3.1
RMN	4	4	143.4	3.5	81.5	3.5	7.5	96	78.4	103.7	66.9	25.9	3.8	14.6	3.6
RMN	4	5	154.7	3.4	84.7	3.9	10.1	96.5	70.6	122.1	68.6	29.6	3.9	17.9	4.7
RMN	4	6	174.6	3.5	89.4	4.9	15.8	101.1	66.2	161.1	71.9	36.6	3.9	21.9	6.3
RMN	4	7	186.6	4.6	116.2	6.3	24.3	101.5	7.8	224.5	79.8	45.4	4	26.6	8.8
RMN	4	8	213.7	5.3	130.6	7.8	35.1	100.8	3.7	291	93.6	54.8	4.1	34.1	11.1
RMN	4	9	185.4	7.3	150.9	9.4	45.7	102.4	1.1	350.5	105.8	62.6	4.1	37.9	12.3
RMN	4	10	116.4	10.6	155	10.3	55.3	107.9	1.1	375.7	114	66.9	4.1	40.2	12.8
RMN	4	11	125.5	13.9	155.9	10.7	67.5	109.9	1.1	380.9	117.8	69.4	4.1	41.3	13
RMN	4	12	88.4	16.1	157.6	10.9	77.8	111.8	1.1	383.4	118.6	70.3	4.1	42	13.1
RMN	4	13	70.9	18.1	158.4	10.8	75.3	116.7	1.1	383.6	118.8	70	4.1	42	13.1
RMN	4	14	65.8	19.9	158.4	10.4	67.7	117.6	1.1	381.1	116.6	69.2	4.1	41.9	13.1
RMN	4	15	65.7	20.4	158.4	10.2	62.4	121.9	1.1	375.9	113.4	68.1	4.1	41.5	12.9
RMN	4	16	57.9	20.6	150	9.9	58.3	122	1.1	366	108.5	66.2	4.1	40.6	12.3
RMN	4	17	67	18.9	144.6	9.4	60.1	117.9	2.9	345	101.8	62.6	4.1	38.1	10.8
RMN	4	18	90.4	13.9	131	8.5	66.3	117	8.2	297	92.6	57.9	4.1	35.2	9
RMN	4	19	106.9	10.5	119.6	7.4	65.2	111.6	72.8	265	83.1	52.9	4	32.5	7.4
RMN	4	20	111.8	7.4	108.4	6.3	55.8	109.4	93.5	231.7	76.5	47.8	4	28.8	6.3
RMN	4	21	92	6.4	106.9	5.4	46	108	95.7	207	72.5	42.9	4	24	5.5
RMN	4	22	96.5	5.6	100	4.7	31.9	103.5	92.2	178.3	69.2	37.9	3.9	20.7	4.9
RMN	4	23	91.4	4.6	88.7	4.1	20.2	102.6	88.8	143.1	67.3	32.7	3.7	16.9	4.2
RMN	4	24	92.6	4.2	84.1	3.7	12.4	97.7	87.3	121.1	66.1	29	3.7	14.4	3.7
NCC	4	1	25.9	35	100.3	6.8	11.8	146.8	87.3	181.2	76.7	35.6	0.6	25.7	3.3
NCC	4	2	28	32.4	99.6	6.7	10.8	146.4	85	176.8	76.7	34.1	0.6	25.3	3.3
NCC	4	3	30	30.5	99.4	6.9	12.9	146.5	84.2	184.4	77.6	35.1	0.6	26.4	3.7
NCC	4	4	34	32.7	102.4	7.7	18.7	147.3	83.6	209.9	80	38.9	0.7	30.4	4.7
NCC	4	5	38.8	35.1	112.6	9.2	30.7	151.8	83.2	258.6	86.8	46.4	1.3	40.5	6.9
NCC	4	6	45.2	42.8	140.9	11.4	45.9	155.4	57.4	345.3	103.9	58.8	2	55.5	9.9
NCC	4	7	52.3	66	183.5	13.9	60.3	157.4	12.8	459.5	128.3	74.4	2.7	73.1	13.6
NCC	4	8	52.9	99.3	214.8	16.1	72.1	159	3.6	555.4	151.9	88.4	3.6	87	16.5
NCC	4	9	45.8	132.2	230	17.7	81	163.8	2.1	605	168.5	97.3	4.6	94	17.9
NCC	4	10	40.1	167	237.3	19.5	88.4	167.1	1.8	624	177.3	101.6	5.2	96.8	18.5
NCC	4	11	36.1	201.1	240.5	20.9	95.4	168.6	1.8	625.8	180.6	103.2	5.4	97.5	18.6
NCC	4	12	32.5	234	242.4	21.5	100.7	172.8	1.8	624.4	181.2	103.6	5.2	97.2	18.6
NCC	4	13	28.7	262.6	244	21.5	98.2	175.5	1.8	625.3	180	103.5	5.1	96.3	18.6
NCC	4	14	26.7	282.5	245.4	21.3	91.8	179	1.9	623.9	176.6	102.7	5	94.2	18.1
NCC	4	15	25.9	292.7	245.4	20.9	89	181	2.5	611.8	169.7	100.5	5	90.2	16.9
NCC	4	16	26.5	287.9	243.6	20	89.5	177.4	4.1	586.8	157.4	96.1	4.8	84.1	15.2
NCC	4	17	28	263.4	234.8	18.7	88.8	174.3	16.4	544.9	139	88.5	4.6	74.5	12.5
NCC	4	18	27.6	213.2	209.6	17	84.7	169.7	36	483.6	116.4	79	4.1	64.4	9.5
NCC	4	19	22.3	141.4	173.9	15.4	76.7	165.3	66.7	422.9	98.5	71	3.8	56.2	7.2
NCC	4	20	19.5	100.1	150.3	13.9	64.4	163	108.6	372.2	88.8	64.8	3.2	49.1	5.7
NCC	4	21	20.2	76.6	137.6	12.3	51.8	158.5	113.8	317.9	83.7	57.9	2.5	43.3	4.9
NCC	4	22	21.2	57.8	121.8	10.6	38.8	155.3	109.7	265.9	80.6	51.4	1.8	38	4.3
NCC	4	23	23.1	46.3	110.5	8.7	25.4	151	106.6	222.9	78.5	45.5	1.3	33.4	3.9
NCC	4	24	24.8	38.3	103.7	7.4	15.9	147.7	95.6	195.1	77.2	39.6	0.9	28.5	3.5
NCV	4	1	2.2	12.7	40.1	1.4	2.9	78.8	56.7	50	11.1	16.8	0.3	8	1.8
NCV	4	2	2.3	10.2	39.6	1.3	2.9	78.3	55.6	48.9	11.2	15.9	0.3	8	1.8
NCV	4	3	2.4	8.9	40.2	1.3	4	78	55.4	51	11.6	16.9	0.3	8.7	2.2
NCV	4	4	2.6	8.3	41.5	1.6	6.6	78.2	54.9	61.2	13.2	21.7	0.4	11.3	3.4
NCV	4	5	2.8	9.4	43.3	2.2	11.7	80.6	54.2	86.8	17.8	31.2	0.6	16.2	5.4
NCV	4	6	4.7	11.8	49.9	2.8	19.9	82.7	38	134.1	27.6	42.8	0.7	22.5	8
NCV	4	7	7.6	19.7	60.7	3.4	26.9	84.1	7.4	188	40.6	53.3	0.8	28	11
NCV	4	8	7	35.7	69.6	3.9	30.7	85.4	0.4	229	50.8	61.5	0.8	31.7	13.2
NCV	4	9	4.9	57.8	74.2	4.2	33.3	88.8	0.3	250.2	56.6	66.5	0.8	33.4	14.3
NCV	4	10	3.9	80.9	76.9	4.4	35.7	91.3	0.3	259.9	59.2	69.3	0.8	33.9	14.6
NCV	4	11	3.3	104.1	79.5	4.5	37.7	92.5	0.3	263.4	59.7	70.4	0.8	34	14.7
NCV	4	12	2.8	124	81.6	4.5	37.8	95.3	0.3	264.4	59.4	70.6	0.8	33.9	14.7
NCV	4	13	2.5	141.4	83	4.5	34.9	97.2	0.3	263.3	58.7	70.1	0.8	33.8	14.6
NCV	4	14	2.1	154.7	84.1	4.3	31.6	99.6	0.8	258.3	57.2	68.8	0.8	33.2	14.4
NCV	4	15	1.9	162.1	84.4	4	29.5	101	1.2	250.6	53.4	66.1	0.8	31.1	13.6
NCV	4	16	2	156.7	83	3.6	28	98.9	0.8	235.8	45.5	61.4	0.7	27.1	11.7
NCV	4	17	2	130.7	75.5	3.1	26.6	97.3	8.7	211	34.5	54.6	0.6	22.5	9.2
NCV	4	18	1.9	97.7	66.1	2.6	25.3	94.5	21	178.3	25.7	47.3	0.6	19	7.1
NCV	4	19	1.6	71.5	58.8	2.2	23.4	92.3	48.5	154.1	21	41.6	0.6	16.5	5.7
NCV	4	20	1.7	55.1	55.3	2.1	20.7	90.9	78.2	134.5	17.9	36.5	0.4	14.4	4.7
NCV	4	21	2	42.8	51.7	1.9	16.8	87.7	80	112.3	15.3	31.6	0.4	12.6	3.9
NCV	4	22	2.1	30.5	47.1	1.8	11.7	85	73.7	89.4	13.6	27.2	0.4	11.1	3.4
NCV	4	23	2.1	21.8	43.6	1.7	6.8	81.9	65.5	69.6	12.4	22.5	0.4	9.5	2.7
NCV	4	24	2.2	15.6	41.7	1.5	3.9	79.8	59.9	56	11.5	18.9	0.3	8.4	2.1
NCI	4	1	13.6	29.8	77.1	3.5	6.3	100.2	82.8	105	65.2	25.4	3.7	13.3	3.2
NCI	4	2	14.6	27.3	75.7	3.4	6.1	99.8	80.6	102.2	65.2	24.9	3.7	13.2	3.1
NCI	4	3	16	25.9	75.2	3.3	7	99.8	78.5	103.3	66.2	25.5	3.8	14.4	3.4
NCI	4	4	17.2	25.7	76.7	3.5	9.1	100.2	73.5	115.4	67.8	28	3.8	17.2	4.3
NCI	4	5	19.8	25.6	80.8	4.2	13.5	103.4	67.8	146	70.4	33.7	3.9	20.7	5.7

Climate	Day	Hour	Heat	Cool	Vent	WH	Cook	Refrig	ExtLight	IntLight	Office	Misc	Proc.	Motors	Comp
NCI	4	6	22	30.3	100.2	5.4	20.8	105.3	45.3	199.4	76.4	41.8	4	25.2	7.8
NCI	4	7	26.7	37.6	121.1	6.8	30.6	106.4	9.6	265.2	87.8	51	4.1	31.6	10.2
NCI	4	8	27.8	52.3	138.6	8.3	40.9	107.4	2.2	325.3	100.4	59.4	4.1	36.9	11.9
NCI	4	9	23.3	74.9	149	9.4	50.7	111.7	1.1	362.5	110	64.9	4.1	39.7	12.6
NCI	4	10	16.9	104.5	153.2	10	61.5	114.9	1.1	375.6	115.4	68	4.1	41.3	12.9
NCI	4	11	12.5	135.5	156.5	10.3	71.9	116.6	1.1	379.3	117.4	69.6	4.1	42.1	13
NCI	4	12	9.7	162.8	158.8	10.3	74.1	120.3	1.1	381.2	117.9	69.9	4.1	42.5	13
NCI	4	13	7.7	185.8	159.9	10.2	69.3	122.7	1.1	381.6	116.8	69.5	4.1	42.5	13
NCI	4	14	7	200.9	160.6	10	63.7	125.7	1.1	379	114.1	68.6	4.1	42.2	12.9
NCI	4	15	6.8	206.9	156.3	9.9	59.6	127.4	1.1	372	110	67.2	4.1	41.4	12.5
NCI	4	16	7.1	198.5	149.8	9.7	59.3	124.6	2.2	356.7	104.1	64.4	4.1	39.5	11.3
NCI	4	17	7.9	178.8	141.8	9	63.3	122.3	5.9	321.5	95.9	60.3	4.1	36.7	9.7
NCI	4	18	9.4	140.5	128.1	8.2	64.4	118.6	14.8	281.3	86.6	55.5	4.1	33.9	8
NCI	4	19	10.3	97.9	114.9	7.2	58	115	48.8	249.3	78.9	50.5	4	30.6	6.7
NCI	4	20	11.9	70.6	108.1	6.4	48.3	113	90.6	221.3	73.8	45.7	4	26.3	5.8
NCI	4	21	12.4	55.1	104	5.6	35.9	109.4	93.6	194.3	70.3	40.8	3.9	22.5	5.1
NCI	4	22	12.7	44.1	94.7	4.9	23.1	107	90.2	161.2	67.9	35.6	3.8	18.8	4.5
NCI	4	23	11.9	36.7	85.6	4.2	13.6	103.5	88.1	132.4	66.5	31	3.7	15.7	3.9
NCI	4	24	12.3	31.8	79.8	3.7	8.4	101.1	84.9	113.3	65.7	27.4	3.7	14.1	3.4
SCC	4	1	12.1	28.7	107.6	8.8	11.7	148.6	143.5	199.3	66.6	34.5	8.4	21.4	4
SCC	4	2	13.1	26.4	105.6	8.5	10.5	147.9	140.4	192.5	66.4	33.5	8.4	20.5	4
SCC	4	3	14	24.8	104.2	8.4	11.3	147.7	136.4	194.6	67.5	34	8.5	20.7	4.3
SCC	4	4	15.4	25.4	110.2	8.8	15.9	148.4	133.7	217	70.8	37.3	8.6	23.9	5.4
SCC	4	5	17.9	32.1	121	10.2	28.2	153.1	132.2	284.7	80.5	47.1	9	36.1	8.6
SCC	4	6	29.2	46.7	146	13.2	45.5	157.4	76.2	395	100.7	63.9	9.9	57.2	14
SCC	4	7	40.9	70.1	182.9	17.2	59.8	159.8	11.2	526.3	129.6	83.7	11.8	81	20.5
SCC	4	8	42.1	98	215.7	21.7	68.9	162	3.9	651.9	158.4	100.4	13.7	99.1	25.7
SCC	4	9	35.2	131.1	234.6	25.1	75.7	167.6	3.8	729.6	179.7	112	15.1	108.1	28.6
SCC	4	10	29.2	166.5	246.3	26.6	83.4	171.2	3.8	757.2	190.9	117.6	15.8	111.6	29.8
SCC	4	11	24.7	193.4	252.1	27.4	90.1	172.4	3.8	762.5	194.4	120.5	16	112.7	30.1
SCC	4	12	21.9	212.8	254	27.9	91.7	175.8	3.8	763.1	194.8	121.6	16.1	112.8	30.1
SCC	4	13	20.2	225.4	255.8	27.6	87.6	177.7	3.8	764.6	192.9	120.5	16.1	112.3	29.9
SCC	4	14	19.1	236.7	257.5	27	81.9	180.6	3.8	762.8	188.3	118.6	16	109.3	28.8
SCC	4	15	18.8	240.9	256.4	26.1	78.8	182.1	4.2	748.9	179.7	115.6	15.6	103.2	26.6
SCC	4	16	19.8	231.7	250.4	24.7	78.9	178.5	6.8	717.8	165.7	109.5	14.4	92.2	23
SCC	4	17	21.3	207.9	239.5	22.7	79.6	175.1	23.4	670.8	144.1	99.9	13.1	77.5	17.9
SCC	4	18	22.6	158.3	215.7	20.1	75.8	170.2	61.1	604.4	118.5	87.2	12.1	64.1	13.2
SCC	4	19	22.3	108.6	182.3	17.6	67.8	166.2	128.6	531.5	97.9	75.1	11.1	54.4	9.9
SCC	4	20	21.3	80.2	159.8	15.6	57.3	164.5	167.4	459.8	85.9	64.1	10.3	47.1	7.9
SCC	4	21	22.7	63.1	146.9	13.6	45.9	160.3	168.1	380.7	78.4	54.4	9.5	40.7	6.6
SCC	4	22	23.4	51	135.4	11.7	34.9	157.3	162.8	311.3	73.2	47.1	9	34.6	5.5
SCC	4	23	16.3	39.6	120.9	10.2	23.1	153.1	155.6	255.6	69.5	41	8.7	28	4.6
SCC	4	24	11	32.2	110	9.3	15	149.8	148.9	216.9	67.4	36.8	8.5	23.4	4.2
SCV	4	1	12.1	57.4	107.6	8.8	11.7	148.6	143.5	199.3	66.6	34.5	8.4	21.4	4
SCV	4	2	13.1	52.9	105.6	8.5	10.5	147.9	140.4	192.5	66.4	33.5	8.4	20.5	4
SCV	4	3	14	49.6	104.2	8.4	11.3	147.7	136.4	194.6	67.5	34	8.5	20.7	4.3
SCV	4	4	15.4	50.8	110.2	8.8	15.9	148.4	133.7	217	70.8	37.3	8.6	23.9	5.4
SCV	4	5	17.9	64.1	121	10.2	28.2	153.1	132.2	284.7	80.5	47.1	9	36.1	8.6
SCV	4	6	29.2	93.4	146	13.2	45.5	157.4	76.2	395	100.7	63.9	9.9	57.2	14
SCV	4	7	40.9	140.1	182.9	17.2	59.8	159.8	11.2	526.3	129.6	83.7	11.8	81	20.5
SCV	4	8	42.1	196	215.7	21.7	68.9	162	3.9	651.9	158.4	100.4	13.7	99.1	25.7
SCV	4	9	35.2	262.2	234.6	25.1	75.7	167.6	3.8	729.6	179.7	112	15.1	108.1	28.6
SCV	4	10	29.2	333	246.3	26.6	83.4	171.2	3.8	757.2	190.9	117.6	15.8	111.6	29.8
SCV	4	11	24.7	386.7	252.1	27.4	90.1	172.4	3.8	762.5	194.4	120.5	16	112.7	30.1
SCV	4	12	21.9	425.7	254	27.9	91.7	175.8	3.8	763.1	194.8	121.6	16.1	112.8	30.1
SCV	4	13	20.2	450.8	255.8	27.6	87.6	177.7	3.8	764.6	192.9	120.5	16.1	112.3	29.9
SCV	4	14	19.1	473.4	257.5	27	81.9	180.6	3.8	762.8	188.3	118.6	16	109.3	28.8
SCV	4	15	18.8	481.9	256.4	26.1	78.8	182.1	4.2	748.9	179.7	115.6	15.6	103.2	26.6
SCV	4	16	19.8	463.3	250.4	24.7	78.9	178.5	6.8	717.8	165.7	109.5	14.4	92.2	23
SCV	4	17	21.3	415.7	239.5	22.7	79.6	175.1	23.4	670.8	144.1	99.9	13.1	77.5	17.9
SCV	4	18	22.6	316.6	215.7	20.1	75.8	170.2	61.1	604.4	118.5	87.2	12.1	64.1	13.2
SCV	4	19	22.3	217.3	182.3	17.6	67.8	166.2	128.6	531.5	97.9	75.1	11.1	54.4	9.9
SCV	4	20	21.3	160.4	159.8	15.6	57.3	164.5	167.4	459.8	85.9	64.1	10.3	47.1	7.9
SCV	4	21	22.7	126.1	146.9	13.6	45.9	160.3	168.1	380.7	78.4	54.4	9.5	40.7	6.6
SCV	4	22	23.4	102	135.4	11.7	34.9	157.3	162.8	311.3	73.2	47.1	9	34.6	5.5
SCV	4	23	16.3	79.2	120.9	10.2	23.1	153.1	155.6	255.6	69.5	41	8.7	28	4.6
SCV	4	24	11	64.4	110	9.3	15	149.8	148.9	216.9	67.4	36.8	8.5	23.4	4.2
SCI	4	1	12.1	40.2	107.6	8.8	11.7	148.6	143.5	199.3	66.6	34.5	8.4	21.4	4
SCI	4	2	13.1	37	105.6	8.5	10.5	147.9	140.4	192.5	66.4	33.5	8.4	20.5	4
SCI	4	3	14	34.7	104.2	8.4	11.3	147.7	136.4	194.6	67.5	34	8.5	20.7	4.3
SCI	4	4	15.4	35.6	110.2	8.8	15.9	148.4	133.7	217	70.8	37.3	8.6	23.9	5.4
SCI	4	5	17.9	44.9	121	10.2	28.2	153.1	132.2	284.7	80.5	47.1	9	36.1	8.6
SCI	4	6	29.2	65.4	146	13.2	45.5	157.4	76.2	395	100.7	63.9	9.9	57.2	14
SCI	4	7	40.9	98.1	182.9	17.2	59.8	159.8	11.2	526.3	129.6	83.7	11.8	81	20.5
SCI	4	8	42.1	137.2	215.7	21.7	68.9	162	3.9	651.9	158.4	100.4	13.7	99.1	25.7
SCI	4	9	35.2	183.6	234.6	25.1	75.7	167.6	3.8	729.6	179.7	112	15.1	108.1	28.6
SCI	4	10	29.2	233.1	246.3	26.6	83.4	171.2	3.8	757.2	190.9	117.6	15.8	111.6	29.8
SCI	4	11	24.7	270.7	252.1	27.4	90.1	172.4	3.8	762.5	194.4	120.5	16	112.7	30.1
SCI	4	12	21.9	298	254	27.9	91.7	175.8	3.8	763.1	194.8	121.6	16.1	112.8	30.1
SCI	4	13	20.2	315.6	255.8	27.6	87.6	177.7	3.8	764.6	192.9	120.5	16.1	112.3	29.9
SCI	4	14	19.1	331.4	257.5	27	81.9	180.6	3.8	762.8	188.3	118.6	16	109.3	28.8
SCI	4	15	18.8	337.3	256.4	26.1	78.8	182.1	4.2	748.9	179.7	115.6	15.6	103.2	26.6
SCI	4	16	19.8	324.3	250.4	24.7	78.9	178.5	6.8	717.8	165.7	109.5	14.4	92.2	23
SCI	4	17	21.3	291	239.5	22.7	79.6	175.1	23.4	670.8	144.1	99.9	13.1	77.5	17.9
SCI	4	18	22.6	221.6	215.7	20.1	75.8	170.2	61.1	604.4	118.5	87.2	12.1	64.1	13.2
SCI	4	19	22.3	152.1	182.3	17.6	67.8	166.2	128.6	531.5	97.9	75.1	11.1	54.4	9.9
SCI	4	20	21.3	112.3	159.8	15.6	57.3	164.5	167.4	459.8	85.9	64.1	10.3	47.1	7.9
SCI	4	21	22.7	88.3	146.9	13.6	45.9	160.3	168.1	380.7	78.4	54.4	9.5	40.7	6.6
SCI	4	22	23.4	71.4	135.4	11.7	34.9	157.3	162.8	311.3	73.2	47.1	9	34.6	5.5
SCI	4	23	16.3	55.4	120.9	10.2	23.1	153.1	155.6	255.6	69.5	41	8.7	28	4.6
SCI	4	24	11	45.1	110	9.3	15	149.8	148.9	216.9	67.4	36.8	8.5	23.4	4.2
DSW	4	1	6.1	19.7	42	4.2	7.5	72.1	80.4	98.8	13.8	26.4	1.1	14.3	2.3
DSW	4	2	6.7	17	41.5	4.2	4.5	71.7	78.7	97.2	13.8	25.7	1.1	15.5	2.4
DSW	4	3	7.3	16	41.6	4.3	4.4	71.6	75.1	101.1	14.1	26.3	1.3	19.3	3.3
DSW	4	4	8.2	16.2	42.8	5	7.2	72.1	72.4	116.4	15.3	29	2.1	25.3	4.4

Climate	Day	Hour	Heat	Cool	Vent	WH	Cook	Refrig	ExtLight	IntLight	Office	Misc	Proc.	Motors	Comp
DSW	4	5	8.8	17.3	45.7	6.2	13.5	74.5	71.5	149	18.1	33.8	3	31.8	5.8
DSW	4	6	10.7	23.5	54.5	7.8	21.7	76.7	32.8	203.4	24.2	41.9	3.5	35.3	7.4
DSW	4	7	12.8	38.3	68.7	9.5	27.9	78.1	3.1	263.1	34.5	52.6	3.8	41.6	9.2
DSW	4	8	12.5	64.4	83.7	11	32.3	79.7	0.7	313.6	44.6	62.8	4	48	10.8
DSW	4	9	10.9	100.6	92.8	12	37.3	83.2	0.6	342.3	51.7	69.1	4.1	54	11.8
DSW	4	10	8.6	142.7	103.3	12.5	41.2	85.8	0.6	350.3	55.4	72.1	4.2	56.9	12.2
DSW	4	11	6	177.8	109.4	12.7	43.4	86.9	0.6	350	56.6	73.4	4.2	56.9	12.3
DSW	4	12	4.9	205.9	110.3	12.7	44.1	89.3	0.6	349.5	56.8	73.7	4.2	56.7	12.3
DSW	4	13	4.4	229.5	111	12.4	41.6	90.8	0.6	348.5	56.3	73.3	4.2	55.7	12.3
DSW	4	14	4.1	246.1	111	12.1	38.4	92.7	0.6	344.6	54.4	72.2	4.1	54.7	12.2
DSW	4	15	3.9	253.3	111	11.7	35.9	93.7	0.6	337.2	50.2	70	4	53.6	11.8
DSW	4	16	3.9	239.5	108.5	11.1	34.9	91.5	2.6	319.5	44.1	65.8	3.9	51	10.5
DSW	4	17	4	198.9	100.8	10.3	34.2	89.6	16.7	290.9	35	60.2	3.8	45.7	8.8
DSW	4	18	4.2	145.3	91.4	9.1	33.3	86.6	46.9	258.5	26.3	54.7	3.7	40	7.3
DSW	4	19	4.7	105.1	82.9	8	32.1	83.8	91.4	226.2	21.2	49.3	3.4	33.8	5.9
DSW	4	20	5.1	79.4	76.8	7.1	29.7	82.2	109.6	195.2	18.4	44.2	3.1	28	4.7
DSW	4	21	5.3	59.1	67.8	6.2	25.5	79.4	103.2	164.2	16.4	36.6	2.8	22.6	3.6
DSW	4	22	5.5	40.6	56.5	5.5	20.4	77.2	95.5	134.6	15.1	31.1	2.4	17.6	2.9
DSW	4	23	5.6	28.7	49.3	4.8	14.5	74.7	92.7	114.4	14.4	29	1.9	14.2	2.5
DSW	4	24	5.8	23.4	44.4	4.3	10.9	72.9	85.5	103.8	14	27.7	1.3	14.5	2.3
HID	4	1	9.7	5.8	41.3	4.5	9.9	70.8	82.7	101.2	13.9	27.4	1.1	12.7	2.2
HID	4	2	9.4	4.9	41.6	4.4	5.6	70.2	81.7	96.8	13.7	26.2	1.1	13.8	2.3
HID	4	3	10.9	4.9	40.9	4.4	3.6	69.9	79.5	97.3	13.8	25.8	1.1	15.2	2.5
HID	4	4	11.6	4.7	43.5	4.7	4.9	70.1	75	103.6	14.4	27.1	1.5	20.5	3.7
HID	4	5	14.2	4.8	45.1	5.8	8.7	70.8	73.6	125	15.9	30.8	2.6	27.1	4.8
HID	4	6	15.4	5.2	48.9	7.1	16.8	74.2	72.9	165.8	19.5	36.5	3.2	31.4	6.4
HID	4	7	20.8	6.4	58.7	9	25.1	74.8	6.1	229.7	27.3	46.9	3.7	38.1	8.2
HID	4	8	24.5	10.1	74.6	10.9	29.9	75.6	1	287.6	39.3	58	3.9	44.2	9.9
HID	4	9	20.2	18.6	88.3	12.4	34.1	77.6	0.6	335.1	48.3	67.7	4	50.7	11.3
HID	4	10	18.7	30.7	93.2	13.1	39.6	81.9	0.6	352.4	54.2	71.8	4.2	56.3	12
HID	4	11	12	41.2	106.6	13.4	42.5	83.5	0.6	354.1	56.5	74.2	4.2	57.2	12.3
HID	4	12	8.4	47.8	106.9	13.6	44.3	84.7	0.6	352.5	56.9	74.8	4.2	56.7	12.3
HID	4	13	6.9	52.9	107.5	13.5	44.2	87.9	0.6	352.7	57	74.8	4.2	56.7	12.3
HID	4	14	5.7	58.9	108	13	40.2	88.4	0.6	352.5	56.2	74.2	4.2	55	12.3
HID	4	15	5.6	61.4	107.3	12.7	37.4	91.3	0.6	347.5	53.4	72.7	4	54.5	12.2
HID	4	16	5.5	55.7	106.2	12.2	35.2	91.4	0.6	335.2	48.3	69.9	4	53	11.5
HID	4	17	5.8	47.5	101.6	11.5	34.9	88.2	3.9	313.4	41.6	64.8	3.8	49.7	9.8
HID	4	18	7.2	32.5	92.2	10.4	34.1	87	25.1	283.7	31	58.8	3.7	43.2	8.2
HID	4	19	8.4	24.6	82.6	9.1	33	82.6	102.2	247.8	23.5	53.5	3.6	38	6.7
HID	4	20	9.2	18.4	76.8	8	31.7	80.8	111.3	214.9	20	47.9	3.2	31	5.4
HID	4	21	8.9	14.6	73	7.1	28.2	79.6	111.3	184.4	17.6	42.3	3.1	25.2	4.3
HID	4	22	9	11.4	59.5	6.2	23.3	75.8	100.6	152.8	15.7	33.3	2.6	20.5	3.2
HID	4	23	9.2	6.3	49.8	5.5	17.9	75.2	94.9	124	14.8	30.2	2.3	15.2	2.6
HID	4	24	10.5	5.6	45.7	4.7	11.5	71.6	94	108.7	14.1	28.6	1.6	12.7	2.4
NWC	5	1	69.2	1.7	102	6.7	12.8	142.2	88.8	182.9	75.2	36	0.7	24	3.2
NWC	5	2	73.4	1.7	100.3	6.5	10.8	141.7	86.2	173	74.9	33.6	0.6	22.9	3.1
NWC	5	3	88.9	1.7	99.3	6.5	10.5	141.5	84.2	172.9	75.1	32.9	0.6	22.9	3.2
NWC	5	4	94.6	1.5	100.3	6.8	14.3	142	84.2	185	76.4	34.5	0.6	24.2	3.5
NWC	5	5	117.6	1.5	105.1	7.8	20.7	143	83.3	214.9	78.8	38.5	0.8	28.4	4.7
NWC	5	6	121.9	1.6	107.8	9.2	34.3	149.5	83.2	261.8	85.9	45.2	1.7	39.6	7
NWC	5	7	145.2	1.8	130.1	11.1	47.6	150.3	75.9	335.4	103	55.8	2.1	52.4	9.3
NWC	5	8	237.4	3.4	166.3	12.8	58.7	149.8	64.2	414.6	120.8	68.8	2.8	66.7	12.1
NWC	5	9	156.9	3.7	177.6	14.1	67.7	149.3	2.5	474.5	136.2	79.2	3.8	74.9	13.8
NWC	5	10	112.7	5	184.7	14.7	75.4	154.9	1.8	500	144.7	84.6	4.9	78.3	14.5
NWC	5	11	101.2	5.4	186.2	15	81.2	156.5	1.8	511.4	149.5	86.9	5.2	79.4	14.8
NWC	5	12	85.1	6.2	187.7	15.4	87.1	158	1.8	511.3	151.1	87.5	5.2	79.5	14.9
NWC	5	13	74.9	7	188.5	15.5	90.5	163.3	1.8	510.9	151.4	87.6	5	78.9	14.8
NWC	5	14	69	7.3	188.3	15.2	85.9	164.5	1.8	509.3	150.3	87.6	4.9	78.3	14.8
NWC	5	15	69.7	7.9	187.9	15.1	80.6	169.8	1.9	507.9	148.4	86.9	4.8	75.3	14.4
NWC	5	16	70.5	7.4	183.9	14.9	81.2	170.4	2.9	496.9	144	85.1	4.8	72	13.5
NWC	5	17	75.2	6.7	181.3	14.2	83.7	165.7	4.9	480.8	134.5	82	4.6	67.3	11.8
NWC	5	18	80	5.8	176.3	13.2	83.1	164.2	89	455.6	119.9	76.1	4.3	59.3	9.4
NWC	5	19	73.8	4.9	156.3	11.9	79.8	158.8	109	407.5	101.2	68.7	3.9	53	7.2
NWC	5	20	69.4	3.4	140.6	10.8	71.5	157	112.5	366.4	89.8	63.6	3.6	47.5	5.7
NWC	5	21	60.1	2.9	136.3	9.8	58.2	155.9	114.6	329.3	84	58.7	3	41.6	4.8
NWC	5	22	60.4	2.3	133.1	8.6	46.8	150	113.2	279	80.4	51.2	2.2	37	4.1
NWC	5	23	64.9	2.1	112.9	7.7	32.8	149.3	107.4	236.4	77.9	45.7	1.6	32.1	3.7
NWC	5	24	64.4	1.8	109.2	7.1	20.1	143.2	106	202.5	76.2	40.7	1.2	28.6	3.3
NWV	5	1	69.9	1.6	89.3	3.4	7.9	94.3	82.9	106.6	65.4	25.8	3.7	13.2	3.2
NWV	5	2	74.2	1.6	88.8	3.3	6.8	93.7	82.4	102	65	24.9	3.7	12.5	3.1
NWV	5	3	80.2	1.6	88.5	3.3	6.4	93.5	79.2	100.7	65.3	24.8	3.7	12.7	3.1
NWV	5	4	91.6	1.6	92.1	3.3	7.5	93.7	78.4	103.7	66.8	25.9	3.8	14.6	3.6
NWV	5	5	88.3	1.5	93.5	3.6	10.2	94.4	70.6	122.1	68.5	29.6	3.9	17.9	4.7
NWV	5	6	135.9	1.5	102	4.6	15.8	99.1	66.2	161.1	71.8	36.7	3.9	21.9	6.3
NWV	5	7	121.3	2	118.7	5.9	24.3	99.5	61.1	224.3	79.6	45.3	4	26.6	8.8
NWV	5	8	166.3	2.2	135.9	7.4	35.1	98.4	43.5	294.3	93.4	54.7	4.1	34.1	11.1
NWV	5	9	168.7	2.4	150	8.8	45.7	97.9	1.1	349	105.5	62.5	4.1	38	12.3
NWV	5	10	125	3.1	157.1	9.7	55.2	103.1	1.1	374	113.7	66.7	4.1	40.2	12.8
NWV	5	11	91.7	4.2	160.2	10.1	67.5	105.3	1.1	379.1	117.5	69.3	4.1	41.4	13
NWV	5	12	70.2	5.7	160.8	10.2	77.8	107.6	1.1	381.8	118.4	70.1	4.1	42	13.1
NWV	5	13	59.5	7	160.4	10.1	75.3	112.5	1.1	382	118.5	69.9	4.1	42.1	13.1
NWV	5	14	54	7.4	158.3	9.8	67.7	113.6	1.1	379.9	116.4	69.1	4.1	41.9	13.1
NWV	5	15	48.7	7.3	157.3	9.6	62.5	118	1.1	375.1	113.1	68	4.1	41.5	12.9
NWV	5	16	47.9	6.6	147.1	9.3	58.4	118.3	1.1	365.5	108.3	66.2	4.1	40.6	12.3
NWV	5	17	63.4	5.6	142.7	8.8	60.1	114.3	2.9	348.4	101.6	62.6	4.1	38.1	10.8
NWV	5	18	75.1	4.7	133.3	8	66.4	112.5	61.6	299.6	92.4	58	4.1	35.2	9
NWV	5	19	61.1	3.7	121.6	7	65.3	107.6	72.8	265.2	83	52.9	4	32.5	7.4
NWV	5	20	61.4	2.9	114.6	5.9	55.9	106.1	93.5	232	76.4	47.8	4	28.8	6.3
NWV	5	21	56.2	2.5	114	5.1	46	105	95.7	207.5	72.3	43	4	24.1	5.5
NWV	5	22	61.3	2.2	107.2	4.4	31.9	100.4	92.2	179.2	69.1	37.9	3.9	20.7	4.9
NWV	5	23	52	1.9	93.9	3.8	20.2	99.8	88.8	143.4	67.2	32.7	3.7	16.9	4.2
NWV	5	24	56.5	1.8	88.1	3.5	12.4	95	87.3	121.2	65.9	29	3.7	14.4	3.7
NWI	5	1	71.4	0.1	48.1	1.5	3	75.6	58	51.9	11.2	17.8	0.3	7.2	1.7
NWI	5	2	77	0.1	48	1.4	2.7	75.4	55.8	48.7	11.1	16	0.3	7	1.6
NWI	5	3	76.6	0	49.6	1.3	3.1	75.3	55.4	49	11.3	15.7	0.3	7.2	1.7

Climate	Day	Hour	Heat	Cool	Vent	WH	Cook	Refrig	ExtLight	IntLight	Office	Misc	Proc.	Motors	Comp
NWI	5	4	79.6	0	48.7	1.5	4.6	75.5	55.4	52.3	11.8	17.1	0.3	8.2	2.1
NWI	5	5	102.2	0.2	51.2	2	7.9	76.1	54.5	66.7	13.8	23.6	0.5	11.8	3.6
NWI	5	6	99	0.2	50.6	2.6	14.3	79.9	54	99.6	20.1	35	0.6	17.4	5.8
NWI	5	7	156.1	0.3	57.6	3.3	23.7	80.4	50	156.4	32.5	46.9	0.7	23.5	8.5
NWI	5	8	258.9	0.4	72.1	3.8	28.9	80.3	7.4	208.2	46.1	56.6	0.8	28.2	11.2
NWI	5	9	222	0.6	77	4.3	31.3	79.5	0.3	241.8	54.1	63.8	0.8	31	12.7
NWI	5	10	167.3	0.5	76.2	4.6	33.5	82.5	0.3	253.4	58.8	67.5	0.8	31.9	13.3
NWI	5	11	126.9	0.6	74	4.7	35.6	83.3	0.3	260.2	60.7	69.6	0.8	32.1	13.6
NWI	5	12	98.2	0.7	73.4	4.8	37.3	84.6	0.3	261.4	61.2	70.2	0.8	32.1	13.5
NWI	5	13	91.6	0.9	72.9	4.8	36.3	88.4	0.3	263.3	61.1	70.1	0.8	32	13.5
NWI	5	14	79.8	1.2	72.3	4.7	32.1	89.3	0.3	260.6	60.5	69.4	0.8	31.8	13.4
NWI	5	15	69.4	1.3	71.6	4.5	29.6	93	1.1	254.1	58.4	67.6	0.8	31	13.1
NWI	5	16	63.3	1.2	71.4	4.1	27.8	93.7	1.2	245.7	53.1	63.9	0.7	28.3	11.7
NWI	5	17	73	0.8	70.3	3.6	26.3	91	0.6	226.3	42.3	58.2	0.6	23.5	9.2
NWI	5	18	70.5	0.4	61.6	3	24.9	90	54.2	197.2	29.9	50.3	0.6	19.1	6.6
NWI	5	19	48.5	0.3	57.6	2.5	23.6	86.3	65.8	162.2	23	43.2	0.6	16.2	4.8
NWI	5	20	30.1	0.3	55.5	2.3	21.4	85.1	82.3	145.5	19.6	38.6	0.5	13.9	3.8
NWI	5	21	33.6	0.3	54.8	2.1	18.9	84.3	80.7	124.9	16.8	33.5	0.4	12	3
NWI	5	22	49.6	0.2	56.3	2	14.6	80.7	79.6	102.8	14.3	29	0.3	10.4	2.5
NWI	5	23	56.5	0.2	51	1.9	9.5	80	69.8	80.2	13.2	25.3	0.4	9	2.3
NWI	5	24	67.4	0.2	52.7	1.7	4.9	76.2	62.7	62.4	12	20.4	0.3	7.6	1.9
RMN	5	1	174.8	1.6	89.3	3.4	7.9	94.3	82.9	106.6	65.4	25.8	3.7	13.2	3.2
RMN	5	2	185.5	1.6	88.8	3.3	6.8	93.7	82.4	102	65	24.9	3.7	12.5	3.1
RMN	5	3	200.5	1.6	88.5	3.3	6.4	93.5	79.2	100.7	65.3	24.8	3.7	12.7	3.1
RMN	5	4	229.1	1.6	92.1	3.3	7.5	93.7	78.4	103.7	66.8	25.9	3.8	14.6	3.6
RMN	5	5	220.6	1.5	93.5	3.6	10.2	94.4	70.6	122.1	68.5	29.6	3.9	17.9	4.7
RMN	5	6	339.7	1.5	102	4.6	15.8	99.1	66.2	161.1	71.8	36.7	3.9	21.9	6.3
RMN	5	7	303.1	2	118.7	5.9	24.3	99.5	61.1	224.3	79.6	45.3	4	26.6	8.8
RMN	5	8	415.6	2.2	135.9	7.4	35.1	98.4	43.5	294.3	93.4	54.7	4.1	34.1	11.1
RMN	5	9	421.7	2.4	150	8.8	45.7	97.9	1.1	349	105.5	62.5	4.1	38	12.3
RMN	5	10	312.6	3.1	157.1	9.7	55.2	103.1	1.1	374	113.7	66.7	4.1	40.2	12.8
RMN	5	11	229.3	4.2	160.2	10.1	67.5	105.3	1.1	379.1	117.5	69.3	4.1	41.4	13
RMN	5	12	175.5	5.7	160.8	10.2	77.8	107.6	1.1	381.8	118.4	70.1	4.1	42	13.1
RMN	5	13	148.6	7	160.4	10.1	75.3	112.5	1.1	382	118.5	69.9	4.1	42.1	13.1
RMN	5	14	135	7.4	158.3	9.8	67.7	113.6	1.1	379.9	116.4	69.1	4.1	41.9	13.1
RMN	5	15	121.7	7.3	157.3	9.6	62.5	118	1.1	375.1	113.1	68	4.1	41.5	12.9
RMN	5	16	119.7	6.6	147.1	9.3	58.4	118.3	1.1	365.5	108.3	66.2	4.1	40.6	12.3
RMN	5	17	158.4	5.6	142.7	8.8	60.1	114.3	2.9	348.4	101.6	62.6	4.1	38.1	10.8
RMN	5	18	187.8	4.7	133.3	8	66.4	112.5	61.6	299.6	92.4	58	4.1	35.2	9
RMN	5	19	152.8	3.7	121.6	7	65.3	107.6	72.8	265.2	83	52.9	4	32.5	7.4
RMN	5	20	153.5	2.9	114.6	5.9	55.9	106.1	93.5	232	76.4	47.8	4	28.8	6.3
RMN	5	21	140.6	2.5	114	5.1	46	105	95.7	207.5	72.3	43	4	24.1	5.5
RMN	5	22	153.3	2.2	107.2	4.4	31.9	100.4	92.2	179.2	69.1	37.9	3.9	20.7	4.9
RMN	5	23	130	1.9	93.9	3.8	20.2	99.8	88.8	143.4	67.2	32.7	3.7	16.9	4.2
RMN	5	24	141.3	1.8	88.1	3.5	12.4	95	87.3	121.2	65.9	29	3.7	14.4	3.7
NCC	5	1	34.1	26.2	106.5	7.1	13	142.9	88.8	186.9	76.5	37.4	0.7	26.1	3.2
NCC	5	2	36.4	23.6	104.5	6.8	11	142.3	86.2	176.4	76.3	34.6	0.6	24.9	3.1
NCC	5	3	38.5	22.6	104.4	6.8	10.6	142.1	84.2	176.3	76.4	34	0.6	25	3.2
NCC	5	4	39.5	21.3	104.3	7.1	14.4	142.5	84.2	189.3	77.8	36.1	0.6	26.9	3.7
NCC	5	5	44.6	23.3	111.9	8.2	21.5	143.7	83.3	223.3	80.9	41.2	0.8	32.2	5.2
NCC	5	6	48.5	22.4	121.2	9.9	36.6	150.4	83.2	282	90.1	50.5	1.7	45.7	7.9
NCC	5	7	62.4	28.8	162.2	12.5	51.9	151.5	76.2	387.1	112.2	65.2	2.2	61.8	11.1
NCC	5	8	96.5	51	209.5	14.9	66	151.5	26.8	509.1	137.6	81.5	3	80.6	15.1
NCC	5	9	78.3	59	225.7	17	75.8	151.6	2.5	584.5	159.6	94	4	91.2	17.4
NCC	5	10	64.3	80.2	233.7	18.3	84.3	157.4	1.8	616.3	172.5	100.6	5.1	95.8	18.3
NCC	5	11	57.9	96.5	235.8	20.5	90.9	158.8	1.8	626	178.5	103.4	5.4	97.4	18.6
NCC	5	12	50.7	113.5	237.6	21.4	98.5	160.4	1.8	622.3	180	104.2	5.4	97.6	18.7
NCC	5	13	45.7	129.5	238	21.6	102.1	165.7	1.8	622.4	179.9	104.3	5.2	96.8	18.6
NCC	5	14	42.5	140.8	240	21.5	95.3	166.8	1.8	625.8	177.9	104.1	5.1	96	18.6
NCC	5	15	41.3	147.9	240	21.3	89.2	172.1	1.9	622	173.7	102.8	5	92.9	17.8
NCC	5	16	41.7	144.6	237.6	20.7	88.7	172.7	2.9	604.8	165.3	99.9	4.9	88.4	16.4
NCC	5	17	45.5	130.2	233.3	19.6	89.8	167.9	4.9	572.4	150.8	94.5	4.8	81.2	14.3
NCC	5	18	49.2	109.2	220.6	18.1	87.5	166.3	69.5	525.1	130.2	85.3	4.4	69.9	11.2
NCC	5	19	43	86.3	185.5	16.3	82.2	160.4	109	456	106.6	75.6	4	60.6	8.2
NCC	5	20	31.4	58.5	158.4	14.8	72.7	158.3	112.5	400.7	92.7	68.8	3.6	53.2	6.3
NCC	5	21	29.2	49.9	145.1	13.3	58.9	157.1	114.6	353.1	86	63	3	46.3	5.2
NCC	5	22	29.4	40.4	136.8	11.7	47.1	151.1	113.2	295.3	81.9	55.2	2.2	41.2	4.5
NCC	5	23	30.6	31.2	116.9	10	33.3	150.4	107.4	246.1	79.4	49.5	1.6	35.9	4
NCC	5	24	31.6	26.6	112.7	7.9	20.2	144	106	208.1	77.4	43.4	1.2	31.7	3.6
NCV	5	1	6.5	2.6	45.4	1.5	3.1	75.7	58	51.9	11.1	17.8	0.3	7.2	1.8
NCV	5	2	7.3	2.3	45.5	1.3	2.7	75.3	55.8	48.6	11	16	0.3	6.9	1.7
NCV	5	3	7.9	2.2	45.3	1.3	3.1	75.2	55.4	48.9	11.2	15.7	0.3	7.2	1.8
NCV	5	4	8.5	2.1	46	1.4	4.6	75.4	55.4	52.2	11.7	17.4	0.3	8.2	2.3
NCV	5	5	11.6	2.4	46.7	1.9	7.9	76	54.5	66.6	13.9	24	0.5	11.8	3.9
NCV	5	6	11.4	2.9	47.8	2.5	14.2	79.8	54	99.1	20	35.2	0.6	17.2	5.9
NCV	5	7	19.8	3.7	54.1	3.2	23.3	80.3	50	154.2	32	46.8	0.7	23.2	8.5
NCV	5	8	29.1	4.1	67.2	3.7	28.7	80.1	5.5	204.8	45.2	56.3	0.8	27.8	11
NCV	5	9	24.6	7	71.4	4.2	31.5	79.7	0.3	237.9	52.9	63.2	0.8	30.4	12.5
NCV	5	10	17.8	10.8	71.1	4.5	34	83.2	0.3	250.5	57.2	66.8	0.8	31.3	13.1
NCV	5	11	14.2	18	71.6	4.6	36.2	84.3	0.3	258	58.7	68.8	0.8	31.5	13.3
NCV	5	12	11.7	26.4	72.8	4.7	38.1	85.6	0.3	258.6	58.6	69.4	0.8	31.5	13.3
NCV	5	13	10.1	33.1	73.3	4.7	37	89.4	0.3	260.2	58.1	69.3	0.8	31.4	13.3
NCV	5	14	9.1	38.7	73.9	4.5	33	90.4	0.3	257.4	57.3	68.6	0.8	31.2	13.2
NCV	5	15	8.6	40.9	73.9	4.3	30.5	93.9	1.1	251.5	55.5	67.1	0.8	30.5	12.9
NCV	5	16	7.9	37.5	72.9	4	28.8	94.5	1.2	243.6	50.7	63.7	0.7	27.9	11.7
NCV	5	17	8.4	28.7	70.2	3.5	27.4	91.7	0.7	225.4	41.2	58.4	0.6	23.2	9.3
NCV	5	18	7.4	19.4	61.3	2.9	26.1	90.7	42.4	196.7	29.6	50.8	0.6	19	6.8
NCV	5	19	5.3	13.9	56.7	2.5	24.8	86.8	65.8	163.3	23	43.8	0.6	16.1	5
NCV	5	20	3.8	10.6	54.2	2.2	22.4	85.7	82.3	146.5	19.5	39.1	0.5	13.9	4
NCV	5	21	3.9	8	52.5	2.1	19.6	84.7	80.7	125.3	16.7	33.9	0.4	12	3.2
NCV	5	22	5	5.7	51.9	1.9	14.9	80.9	79.6	102.9	14.2	29.3	0.3	10.4	2.6
NCV	5	23	5.2	3.9	47.3	1.8	9.6	80.2	69.8	80.2	13.1	25.3	0.4	9	2.4
NCV	5	24	5.9	3.2	47.3	1.7	5	76.3	62.8	62.6	11.9	20.4	0.3	7.6	2
NCI	5	1	23.5	21.3	81.9	3.7	6.8	94.4	82.9	108.5	65.5	26.1	3.7	13.1	3.2
NCI	5	2	26	20.2	83.1	3.6	5.9	93.9	82.4	103.6	65	24.9	3.7	12.5	3.1

Climate	Day	Hour	Heat	Cool	Vent	WH	Cook	Refrig	ExtLight	IntLight	Office	Misc	Proc.	Motors	Comp
NCI	5	3	27.8	19.1	81.9	3.5	6.1	93.7	79.2	102.1	65.3	24.7	3.7	12.7	3.1
NCI	5	4	30.5	18.8	84.1	3.4	7.5	93.9	78.4	104.8	66.8	25.8	3.8	14.6	3.6
NCI	5	5	32	18.7	85.8	3.7	10.1	94.6	70.6	122.9	68.5	29.2	3.9	17.9	4.7
NCI	5	6	36.6	18.6	91.9	4.7	15.6	99.2	66.2	160.9	71.7	36.2	3.9	21.8	6.3
NCI	5	7	36.6	24.4	113.7	6	24	99.6	61.1	222.5	79.4	44.9	4	26.4	8.7
NCI	5	8	50.2	27	130.4	7.5	34.7	98.6	22.3	292.8	92.9	54.2	4.1	33.9	11
NCI	5	9	49.3	31.6	145	9	45	98.1	1.1	344.8	104.7	61.7	4.1	37.6	12.2
NCI	5	10	38.6	45.9	150.9	9.9	54.3	103.1	1.1	368.8	112.6	65.7	4.1	39.8	12.6
NCI	5	11	30.5	63.6	153.2	10.3	66.1	105.1	1.1	374.1	116.3	68.1	4.1	40.9	12.8
NCI	5	12	22.8	78.9	154.1	10.4	75.5	107.1	1.1	376.7	117.1	69	4.1	41.6	12.9
NCI	5	13	17.8	91.8	154.4	10.4	72.9	112	1.1	378.1	117.3	69	4.1	41.8	12.9
NCI	5	14	15.6	102.8	154.4	10.2	66.3	113.1	1.1	378.1	115.4	68.4	4.1	41.7	12.9
NCI	5	15	15.3	105.9	154.1	10.1	61.4	117.4	1.1	374.3	112.3	67.5	4.1	41.3	12.7
NCI	5	16	14.8	101.9	144.9	10	58	117.8	1.1	365.6	107.7	65.9	4.1	40.5	12.1
NCI	5	17	18.5	84.6	139.1	9.6	59.9	114.1	2.9	348.1	101.2	62.6	4.1	38	10.6
NCI	5	18	23.7	65.3	130.2	8.8	65.2	112.8	45.6	304.3	92.1	58.1	4.1	35.2	8.9
NCI	5	19	23	52.4	118.9	7.8	63.6	107.9	72.8	268.7	82.7	53.2	4	32.5	7.3
NCI	5	20	22	41.7	108.4	6.9	54	106.2	93.5	235.5	76.2	48.4	4	28.9	6.3
NCI	5	21	19.9	35.8	107.9	6.1	44.2	105.1	95.7	210.7	72.2	43.6	4	24.1	5.5
NCI	5	22	21.8	30.9	102.4	5.4	30.3	100.6	92.2	183	69	38.6	3.9	20.7	4.9
NCI	5	23	20.1	26	90.9	4.7	18.1	100	88.8	146.8	67.2	33.4	3.7	16.8	4.2
NCI	5	24	20.3	23	85.7	4	10.5	95.2	87.3	123.2	66	29.3	3.7	14.2	3.7
SCC	5	1	19.7	20.4	109.3	9.1	12.9	144.1	146.3	206.3	66.8	36.3	8.4	22.1	4.1
SCC	5	2	22	18.5	109.2	8.7	10.9	143.3	141.7	194.6	66.3	34.6	8.3	20.7	4
SCC	5	3	24	17	107.5	8.5	10.3	142.6	139.5	191.2	66.3	34	8.4	20.3	4
SCC	5	4	26.1	15.6	108.8	8.5	12	142.4	134.4	197	68.2	35.3	8.5	20.8	4.4
SCC	5	5	28.5	17	118.5	9.1	18.3	143.5	133.2	229.7	72.3	40.5	8.7	25.7	6
SCC	5	6	33.3	20.9	127.8	11.1	34.5	150.3	131.5	319	85.4	53.5	9.2	42.3	10.2
SCC	5	7	54	30.9	153.3	14.8	52.2	151.8	86	440.7	109.8	72.3	10.3	66	16.2
SCC	5	8	76.3	44.4	191.3	19.1	64.1	152.1	3.9	575.4	141	92.4	12.7	89.3	22.9
SCC	5	9	64.6	60.1	218.1	23.6	71.2	153.7	3.8	692.6	167.2	107.8	14.3	103.5	27
SCC	5	10	53.1	87.8	233.3	26.2	77.6	161.2	3.8	742.6	184.4	115.3	15.4	108.8	28.9
SCC	5	11	41.3	118.2	244.3	26.9	86	164.6	3.8	755.1	191.1	118.8	15.9	111	29.7
SCC	5	12	33.6	145.7	247.3	27.8	91.6	167.2	3.8	755.5	192.4	121.3	16	111.4	29.8
SCC	5	13	29.2	164.1	249.1	28	90.6	172.8	3.8	756.6	192.2	121.6	16	111.3	29.7
SCC	5	14	26.8	175.5	250.2	27.4	84.4	173.2	3.8	758.5	189.3	119.7	16	110.6	29.3
SCC	5	15	26	175.7	249	26.9	79.1	177.4	3.8	754.1	184.1	118	15.8	106.2	27.8
SCC	5	16	27	166	244.9	25.8	77.7	176.9	4.4	735.1	173.9	114.2	15.4	99.2	25.4
SCC	5	17	31.4	137.4	233.6	24.1	78.9	170.9	8.3	697.2	158	106.1	13.7	85.9	21
SCC	5	18	37.4	108.5	219.9	21.9	79.3	168.5	112.9	645.4	133.2	95.1	12.7	70.6	15.6
SCC	5	19	35.6	81.7	191.9	19.1	72.9	162.2	159	569.2	107.6	82.1	11.7	58.9	11.4
SCC	5	20	27.6	60.4	162.3	16.8	64	160.4	165.2	498	90.7	71.4	10.8	50.7	8.7
SCC	5	21	28.9	47.5	150.4	14.9	52.5	159	168.8	428.4	82.1	60.5	10	44.1	7.2
SCC	5	22	30.2	38.2	139.4	12.8	41.2	152.9	167.6	345	75.6	51.7	9.3	37.8	6.1
SCC	5	23	31.4	31.4	128.2	11.1	30.5	151.9	159.7	286.1	71.3	44.9	8.9	31.8	5
SCC	5	24	16.9	24	114	9.7	18.1	145.6	153	233.9	68.1	39.8	8.6	25	4.4
SCV	5	1	19.7	40.8	109.3	9.1	12.9	144.1	146.3	206.3	66.8	36.3	8.4	22.1	4.1
SCV	5	2	22	37.1	109.2	8.7	10.9	143.3	141.7	194.6	66.3	34.6	8.3	20.7	4
SCV	5	3	24	34	107.5	8.5	10.3	142.6	139.5	191.2	66.3	34	8.4	20.3	4
SCV	5	4	26.1	31.2	108.8	8.5	12	142.4	134.4	197	68.2	35.3	8.5	20.8	4.4
SCV	5	5	28.5	34	118.5	9.1	18.3	143.5	133.2	229.7	72.3	40.5	8.7	25.7	6
SCV	5	6	33.3	41.8	127.8	11.1	34.5	150.3	131.5	319	85.4	53.5	9.2	42.3	10.2
SCV	5	7	54	61.9	153.3	14.8	52.2	151.8	86	440.7	109.8	72.3	10.3	66	16.2
SCV	5	8	76.3	88.9	191.3	19.1	64.1	152.1	3.9	575.4	141	92.4	12.7	89.3	22.9
SCV	5	9	64.6	120.2	218.1	23.6	71.2	153.7	3.8	692.6	167.2	107.8	14.3	103.5	27
SCV	5	10	53.1	175.6	233.3	26.2	77.6	161.2	3.8	742.6	184.4	115.3	15.4	108.8	28.9
SCV	5	11	41.3	236.3	244.3	26.9	86	164.6	3.8	755.1	191.1	118.8	15.9	111	29.7
SCV	5	12	33.6	291.3	247.3	27.8	91.6	167.2	3.8	755.5	192.4	121.3	16	111.4	29.8
SCV	5	13	29.2	328.2	249.1	28	90.6	172.8	3.8	756.6	192.2	121.6	16	111.3	29.7
SCV	5	14	26.8	351.1	250.2	27.4	84.4	173.2	3.8	758.5	189.3	119.7	16	110.6	29.3
SCV	5	15	26	351.4	249	26.9	79.1	177.4	3.8	754.1	184.1	118	15.8	106.2	27.8
SCV	5	16	27	332	244.9	25.8	77.7	176.9	4.4	735.1	173.9	114.2	15.4	99.2	25.4
SCV	5	17	31.4	274.7	233.6	24.1	78.9	170.9	8.3	697.2	158	106.1	13.7	85.9	21
SCV	5	18	37.4	216.9	219.9	21.9	79.3	168.5	112.9	645.4	133.2	95.1	12.7	70.6	15.6
SCV	5	19	35.6	163.3	191.9	19.1	72.9	162.2	159	569.2	107.6	82.1	11.7	58.9	11.4
SCV	5	20	27.6	120.8	162.3	16.8	64	160.4	165.2	498	90.7	71.4	10.8	50.7	8.7
SCV	5	21	28.9	95	150.4	14.9	52.5	159	168.8	428.4	82.1	60.5	10	44.1	7.2
SCV	5	22	30.2	76.4	139.4	12.8	41.2	152.9	167.6	345	75.6	51.7	9.3	37.8	6.1
SCV	5	23	31.4	62.8	128.2	11.1	30.5	151.9	159.7	286.1	71.3	44.9	8.9	31.8	5
SCV	5	24	16.9	48	114	9.7	18.1	145.6	153	233.9	68.1	39.8	8.6	25	4.4
SCI	5	1	19.7	28.5	109.3	9.1	12.9	144.1	146.3	206.3	66.8	36.3	8.4	22.1	4.1
SCI	5	2	22	26	109.2	8.7	10.9	143.3	141.7	194.6	66.3	34.6	8.3	20.7	4
SCI	5	3	24	23.8	107.5	8.5	10.3	142.6	139.5	191.2	66.3	34	8.4	20.3	4
SCI	5	4	26.1	21.8	108.8	8.5	12	142.4	134.4	197	68.2	35.3	8.5	20.8	4.4
SCI	5	5	28.5	23.8	118.5	9.1	18.3	143.5	133.2	229.7	72.3	40.5	8.7	25.7	6
SCI	5	6	33.3	29.3	127.8	11.1	34.5	150.3	131.5	319	85.4	53.5	9.2	42.3	10.2
SCI	5	7	54	43.3	153.3	14.8	52.2	151.8	86	440.7	109.8	72.3	10.3	66	16.2
SCI	5	8	76.3	62.2	191.3	19.1	64.1	152.1	3.9	575.4	141	92.4	12.7	89.3	22.9
SCI	5	9	64.6	84.1	218.1	23.6	71.2	153.7	3.8	692.6	167.2	107.8	14.3	103.5	27
SCI	5	10	53.1	122.9	233.3	26.2	77.6	161.2	3.8	742.6	184.4	115.3	15.4	108.8	28.9
SCI	5	11	41.3	165.4	244.3	26.9	86	164.6	3.8	755.1	191.1	118.8	15.9	111	29.7
SCI	5	12	33.6	203.9	247.3	27.8	91.6	167.2	3.8	755.5	192.4	121.3	16	111.4	29.8
SCI	5	13	29.2	229.7	249.1	28	90.6	172.8	3.8	756.6	192.2	121.6	16	111.3	29.7
SCI	5	14	26.8	245.8	250.2	27.4	84.4	173.2	3.8	758.5	189.3	119.7	16	110.6	29.3
SCI	5	15	26	246	249	26.9	79.1	177.4	3.8	754.1	184.1	118	15.8	106.2	27.8
SCI	5	16	27	232.4	244.9	25.8	77.7	176.9	4.4	735.1	173.9	114.2	15.4	99.2	25.4
SCI	5	17	31.4	192.3	233.6	24.1	78.9	170.9	8.3	697.2	158	106.1	13.7	85.9	21
SCI	5	18	37.4	151.8	219.9	21.9	79.3	168.5	112.9	645.4	133.2	95.1	12.7	70.6	15.6
SCI	5	19	35.6	114.3	191.9	19.1	72.9	162.2	159	569.2	107.6	82.1	11.7	58.9	11.4
SCI	5	20	27.6	84.6	162.3	16.8	64	160.4	165.2	498	90.7	71.4	10.8	50.7	8.7
SCI	5	21	28.9	66.5	150.4	14.9	52.5	159	168.8	428.4	82.1	60.5	10	44.1	7.2
SCI	5	22	30.2	53.5	139.4	12.8	41.2	152.9	167.6	345	75.6	51.7	9.3	37.8	6.1
SCI	5	23	31.4	44	128.2	11.1	30.5	151.9	159.7	286.1	71.3	44.9	8.9	31.8	5
SCI	5	24	16.9	33.6	114	9.7	18.1	145.6	153	233.9	68.1	39.8	8.6	25	4.4
DSW	5	1	13.7	9.8	43.4	4.4	10.1	69.4	81	101.4	13.9	27.5	1.1	12.8	2.3

Climate	Day	Hour	Heat	Cool	Vent	WH	Cook	Refrig	ExtLight	IntLight	Office	Misc	Proc.	Motors	Comp
DSW	5	2	15.2	8.9	43.3	4.3	5.7	69	80	96.9	13.7	26.3	1.1	13.8	2.3
DSW	5	3	17.4	8.4	43.5	4.3	3.6	68.7	77.9	97.2	13.8	25.9	1.1	15.2	2.6
DSW	5	4	19.3	8.1	44.5	4.6	4.9	68.8	73.4	103.5	14.4	27.2	1.5	20.5	3.7
DSW	5	5	20.6	8.5	46.5	5.6	8.7	69.6	71.9	124.5	15.9	30.8	2.6	27.1	4.8
DSW	5	6	20.8	9.7	49.8	6.9	16.7	73.1	71.3	163.7	19.4	36.3	3.2	31.3	6.4
DSW	5	7	29.2	11.3	59.9	8.7	25	73.6	43.4	227.5	26.9	46.4	3.7	38	8.2
DSW	5	8	40.9	13.9	75.2	10.4	29.7	73.4	1	286.3	38.7	57.3	3.9	44	9.9
DSW	5	9	38.1	22.5	86.8	11.8	33.9	74.6	0.6	328.7	47.3	66.7	4	50.4	11.3
DSW	5	10	32.5	42.7	93.1	12.5	39.3	79	0.6	344.5	53	70.7	4.2	55.9	12
DSW	5	11	20.6	70.1	104.3	12.8	42.2	81	0.6	345.9	55.2	73	4.2	56.7	12.2
DSW	5	12	14.7	91.7	104.7	13	44	82.7	0.6	344.2	55.6	73.6	4.2	56.2	12.3
DSW	5	13	11.4	108.5	105.2	13	43.9	85.9	0.6	344.5	55.6	73.6	4.2	56.2	12.3
DSW	5	14	9.3	122.8	105.1	12.5	40	86.5	0.6	343.4	54.9	73.1	4.2	54.6	12.3
DSW	5	15	8.4	125.6	104.2	12.2	37.2	89.3	0.6	338.3	52.3	71.8	4	54.1	12.1
DSW	5	16	8.9	114	103.3	11.7	35	89.2	0.6	331.8	47.4	69.1	4	52.6	11.5
DSW	5	17	9.8	91.2	98.8	11.1	34.7	85.9	3.9	312.4	40.9	64.1	3.8	49.4	9.8
DSW	5	18	9.8	64.2	90.7	10.1	33.9	84.2	63.7	279.4	30.5	58.3	3.8	42.9	8.1
DSW	5	19	10.3	46.8	82.7	8.8	32.8	80.3	100.6	243.5	23.3	53.2	3.7	37.8	6.7
DSW	5	20	10.3	35.9	76.9	7.7	31.6	78.8	109.6	211.7	19.8	47.7	3.3	30.8	5.4
DSW	5	21	10.3	29	73	6.9	28.2	77.7	109.6	182.1	17.5	42.3	3.1	25.1	4.3
DSW	5	22	10.7	22.5	62.4	6.1	23.5	74.2	98.9	151.8	15.6	33.3	2.6	20.4	3.2
DSW	5	23	11.2	13.2	50.1	5.4	18.1	73.7	93.2	122.9	14.8	30.2	2.3	15.2	2.6
DSW	5	24	12.7	11.2	47.1	4.6	11.9	70.2	92.4	108.2	14.1	28.8	1.6	12.7	2.4
HID	5	1	26.6	3.8	46.3	4.1	9.9	68.8	80.3	96.7	13.7	27.2	1.1	13	2.4
HID	5	2	29.1	3.8	46.8	4	5.6	68.3	79.2	92.3	13.5	26	1.1	14	2.4
HID	5	3	29.6	3.4	45.9	4.1	3.6	68.1	77.1	92.8	13.6	25.7	1.1	15.4	2.7
HID	5	4	33	3.7	48.4	4.3	4.9	68.3	72.6	99.1	14.2	26.9	1.5	20.7	3.9
HID	5	5	34.6	3.6	49	5.3	8.6	69.1	71.1	119.3	15.6	30.5	2.6	27.3	5
HID	5	6	35	4.3	53	6.5	16.5	72.5	70.5	153.5	19	35.9	3.2	31.5	6.5
HID	5	7	48.8	4.6	62.7	8.2	24.7	73	44.7	213.3	26.1	45.8	3.7	38.1	8.3
HID	5	8	58.7	5.1	75.1	9.8	29.2	72.7	1	273.6	37.5	56.3	3.9	44.1	10
HID	5	9	66.4	7.6	83.4	11	33	74.1	0.6	312.8	45.6	65.3	4	50.4	11.3
HID	5	10	51.2	13.3	90.2	11.5	38.4	78.9	0.6	327.3	50.8	68.8	4.2	55.8	12
HID	5	11	35.4	21.2	97.3	11.8	41.4	81.1	0.6	328.1	52.9	70.9	4.2	56.7	12.3
HID	5	12	24.8	27.4	97.2	12	43.3	82.8	0.6	326.3	53.3	71.4	4.2	56.1	12.3
HID	5	13	19.3	34.6	97	11.9	43.2	86.1	0.6	326.6	53.4	71.5	4.2	56.1	12.3
HID	5	14	15.4	38.8	96.4	11.5	39.3	86.6	0.6	325.8	52.9	71.2	4.2	54.5	12.3
HID	5	15	13.2	40.4	95.4	11.3	36.7	89.3	0.6	323.4	50.7	70.5	4	54	12.2
HID	5	16	13.8	36.9	94.9	10.9	34.8	89	0.6	320.2	46.3	68.2	4	52.5	11.5
HID	5	17	16.4	28.7	92.1	10.4	34.6	85.5	3.9	303.9	40.2	63.4	3.8	49.1	9.8
HID	5	18	14.6	20.7	86.3	9.5	33.8	83.3	63.7	270.2	30.2	57.8	3.7	42.6	8.1
HID	5	19	15.5	16.5	78.8	8.3	32.8	79.6	99.8	234.9	23.1	52.8	3.6	37.4	6.6
HID	5	20	14.8	13.3	75.5	7.3	31.5	78.1	108.9	203.4	19.6	47.4	3.2	30.4	5.4
HID	5	21	15.4	11.1	73.6	6.5	28.1	77	108.9	174.4	17.3	42	3.1	24.8	4.2
HID	5	22	18.8	8.4	65.7	5.8	23.2	73.5	98.1	144.5	15.4	33	2.6	20.2	3.2
HID	5	23	20	4.7	51.5	5.1	17.8	73	92.4	117.3	14.6	30	2.3	15.1	2.7
HID	5	24	21.4	4.4	48.5	4.3	11.5	69.5	91.6	103.3	13.9	28.4	1.6	12.8	2.4

Appendix C

Commercial Building Types

Table C.1: Commercial Output Data

Type	Size (ksf)	Description
Small office	10	Single story office buildings
Large office	50	Multi-story office buildings
Retail	15	Retail/sales buildings
Lodging	25	Hotel, motels and short-term multi-tenant housing
Grocery	15	Food sales facilities with more refrigeration than food preparation
Restaurant	10	Food sales facilities with more food preparation than refrigeration
School	35	Educational building, including large assembly
Health	50	Health care facilities

Appendix D

Climate Region Codes

Table D.1: Climate Region Codes

Code	Description
NWC	Northwest coast
NWV	Northwest valleys
NWI	Northwest inland
RMN	Rocky mountains
NCC	Northern California coast
NCV	Northern California valleys
NCI	Northern California inland
SCC	Southern California coast
SCV	Southern California valleys
SCI	Southern California inland
DSW	Desert southwest
HID	High deserts

Table D.2: Day Codes

Code	Description
1	Normal Summer
2	Hot Summer
3	Cool Summer
4	Shoulder
5	Winter

References

[1] Dmitry Kosterev, Anatoliy Meklin, John Undrill, Bernard Lesieutre, William Price, David Chassin, Richard Bravo, and Steve Yang. Load modeling in power system studies: WECC progress update. In *Power and Energy Society General Meeting-Conversion and Delivery of Electrical Energy in the 21st Century, 2008 IEEE*, pages 1–8. IEEE, 2008.

[2] NEEA. Regional data sources.

[3] Ecotope Inc. Residential Building Assesment: Metering Study. Technical report, NEEA, 2014.

[4] Ecotope Inc. Residential Building Assesment: Manufactured Home Characteristics and Energy Use. Technical report, NEEA, 2013.

[5] Inc. Itron. California Commercial End-Use Survey. Technical report, Itron, Inc, 2006.

[6] James J. Hirsch and Associates. Doe2.

[7] O. Parson, G Fisher, A. Hersey, N Batra, J. Kelly, A. Singh, W. Knottenbelt, and W Rogers. Dataport and NILMTK: a building data set designed for non-intrusive load monitoring. *1st International Symposium on Signal Processing Applications in Smart Buildings at 3rd IEEE Global Conference on Signal and Amp; Information Processing*, 2015.

[8] D. Murray, L. Stankovic, and V. Stankovic. Data Descriptor: An electrical load measurements dataset of United Kingdom households from a two-year longitudinal study. *Scientific Data*, 2017.

[9] R. A. Sevlian, J. Yu, Y. Liao, X. Chen, E. C. Weng, Y. Kara, M. Tabone, S. Badri, C. Tan, S. Kiliccote, and R. Rajagopal. Vader: Visualization and analytics for distributed energy resources. Unpublished Manuscript, 2017.

[10] Y. Weng, Y. Liao, and R. Rajagopal. Distributed Energy Resources Topology Identification via Graphical Modeling. *IEEE Transactions on Power Systems*, pages 2682 – 2694, 2016.

[11] C. Chow and C. Liu. Approximating Discrete Probability Distributions with Dependence Trees. *IEEE Transactions Information Theory*, pages 462 – 467, 1968.

[12] E. C. Kara, M. Tabone, C. Roberts, S Kiliccote, and E. M. Stewart. Estimating behind-the-meter solar generation with existing measurement infrastructure: Poster Abstract. *Proceedings of the 3rd ACM Interna- tional Conference on Systems for Energy-Efficient Built Environments, BuildSys '16*, pages 259 – 260, 2016.

[13] M. Wytock and J. Z. Kolter. Approximating Discrete Probability Distributions with Dependence Trees. 2013.

[14] R. E. Edwards, J. New, and L. E. Parker. Predicting Future Hourly Residential Electrical Consumption: A Machine Learning Case Study. *Energy and Buildings*, pages 591 – 603, 2012.

[15] H. Ziekow, C. Goebel, J. Strssker, and H. A. Jacobsen. The potential of smart home sensors in forecasting household electricity demand. *IEEE International Conference on Smart Grid Communications (SmartGridComm)*, pages 229 – 234, 2013.

[16] R. P. Singh, P. X. Gao, and D. J. Lizotte. On Hourly Home Peak Load Prediction. *IEEE International Conference on Smart Grid Communications*, 2013.

[17] P. G. Da Silva, D. Ilic, and S. Karnouskos. The Impact of Smart Grid Prosumer Grouping on Forecasting Accuracy and its Benefits for Local Electricity Market Trading. *IEEE Transactions on Smart Grid*, pages 402 – 410, 2014.

[18] M. Vasirani, S. Humeau, T. K. Wijaya, and K. K Aberer. Electricity load forecasting for residential customers: Exploiting aggregation and correlation between households. *Sustainable Internet and ICT for Sustainability (SustainIT)*, pages 1 – 6, 2013.

[19] P. Mirowski, S. Chen, H. Kam, T. Chun-Nam, and Y. Chun-Nam. Demand Forecasting in Smart Grids. *Bell Labs Technical Journal*, pages 135 – 158, 2014.

[20] M. Ghofrani, M. Hassanzadeh, M. Etezadi-Amoli, and M. S. Fadali. Smart Meter Based Short-term Load Forecasting for Residential Customers. *North American Power Symposium (NAPS)*, pages 1 – 5, 2011.