SLAC–PUB–4973
May 1989
(T/E)

CP VIOLATION IN K DECAYS*

FREDERICK J. GILMAN

Stanford Linear Accelerator Center
Stanford University, Stanford, California, 94309

ABSTRACT

Recent theoretical and experimental progress on the manifestation of CP violation in K decays, and toward understanding whether CP violation originates in a phase, or phases, in the weak mixing matrix of quarks is reviewed.

Invited talk given at the 2nd International Symposium on the Fourth Family of Quarks and Leptons, Santa Monica, CA, February 22–25, 1989.

⋆ Work supported by the Department of Energy, contract DE–AC03–76SF00515.

INTRODUCTION

As is the case for much of contemporary research in high energy physics, the area of CP (the product of charge conjugation and parity) violation in K decays is to be seen in the context of a much broader effort of looking for physics beyond the Standard Model. One of the specific types of such physics is represented by the possibility of a fourth family, as exemplified by the title and main focus of this conference. From the broader persepective of looking for new physics of any kind, there are two principal avenues:

(1) The high energy route involves the direct observation of new quarks, new leptons, heavy Higgs bosons ... Of necessity, this involves accelerators which are at the high energy frontier. That frontier, in the past few years, has begun to yield quark-quark (from proton-antiproton colliders) collisions at total energies of order 100 GeV. We now have lepton-lepton (from electron-positron colliders) collisions in this range and quark-quark collisions probing physics up to several hundred GeV. Experiments at the SSC will be allow us to explore physics at the 1000 GeV scale and above. This is the natural continuation of the field of high energy physics to higher and higher mass scales.

(2) The "low energy" route also can involve the direct observation of new particles such as additional light neutrinos. The confirmation of nonzero neutrino mass and mixing would indicate physics beyond the Standard Model as well. However, much of the work at "low energy" aims to be sensitive to new physics through the indirect effects of virtual, heavy particles. These,

through precision measurements, give us a window on the high energy world which others attack directly. While deemed a "low energy" or low-mass-scale route, in many cases it is implemented at high energy experimental facilities, using them to produce intense fluxes of low mass particles whose properties with respect to electroweak interactions are then studied. In this latter mode, we search for physics beyond the Standard Model through:

(a) Processes forbidden in the Standard Model, such as would be induced by lepton-flavor changing neutral currents.

(b) Indications that CP-violating phenomena have an origin other than from the nontrivial phase in the quark-flavor mixing matrix of the Standard Model.

(c) Deviations from expected rates, especially for rare processes which are sensitive to heavy virtual particles (from a fourth generation, supersymmetry, left-right electroweak gauge symmetry, etc.) This is especially true of CP-violating processes, which in some cases are especially sensitive to the top quark and possible other high-mass particles.

As we pin down and measure the parameters associated with each of the particles in the Standard Model, we use these numbers, together with our improved calculational skills, to obtain updated predictions. Then we can return to the former perspective of looking for physics beyond the Standard Model by comparing these predictions with all previous data and by pointing to further experiments which are yet more sensitive to new physics.

A phenomenologist examining the possibilities for new physics in rare decays

needs to be acquainted with relatively few generic Feynman diagrams. There are some processes which are forbidden in the Standard Model to any order. An example is leptonic flavor-changing neutral-currents. They might occur at "tree-level" through the diagram in Fig. 1, which could represent the exchange of a flavor-changing "horizontal" gauge boson, for example. There are also processes, which while forbidden at tree-level in the Standard Model, can occur at "one-loop," as indicated by the penguin and box diagrams shown in Fig. 2.

Now let us take a closer look at the subject of CP violation.

CP VIOLATION IN THE STANDARD MODEL AND K DECAYS

The Standard Model allows for CP violation in the form of phases originating in the quark mixing matrix when there are three or more generations of quarks and leptons. With just three generations, there is precisely one nontrivial CP-violating phase. With four generations, there are three such phases.

The computation of any difference of rates between a given process and its CP conjugate process (or of a CP-violating amplitude) always has the form (in the three-generation case):

$$\Gamma - \bar{\Gamma} \;\propto\; s_1^2 s_2 s_3 c_1 c_2 c_3 \sin\delta_{KM} \;=\; s_{12} s_{23} s_{13} c_{12} c_{23} c_{13}^2 \sin\delta_{13} \quad , \tag{1}$$

where we express things first in the original parametrization of the quark mixing matrix[1] and then in the "preferred" parametrization adopted by the Particle Data Group,[2] using the shorthand that $s_i = \sin\theta_i$ and $c_i = \cos\theta_i$. Our present experimental knowledge assures us that the approximation of setting the cosines

to unity induces errors of at most a few percent. In that case the combination of factors in Eq. (1), involving the invariant measure of CP violation,[3] becomes the approximate combination,

$$s_1^2 s_2 s_3 \sin\delta_{KM} \;=\; s_{12} s_{23} s_{13} \sin\delta_{13} \quad , \tag{2}$$

which was recognized earlier as characteristic of CP-violating effects in the three-generation Standard Model.[4] This combination of factors is (after removing s_1^2, whose value is accurately known)

$$s_2 s_3 \sin\delta_{KM} \;\equiv\; s_2 s_3 s_\delta \quad ,$$

where we have used the "old" parametrization.

The Kobayashi–Maskawa factors in the difference of rates in Eq. (1) defines the "price of CP violation" in the Standard Model. This "price" must be paid somewhere. It could be that it is paid in terms of these factors being found primarily in the decay rate for the process itself, which results in a very small branching ratio, but possibly then in a large asymmetry between particle and antiparticle. On the other hand, the price could be paid by having these factors mostly in the asymmetry between particle and antiparticle decays, which is then correspondingly small.

The latter situation is characteristic of K decays, where s_1^2 enters the rate for the usual weak decays, leaving $s_2 s_3 s_\delta$ for the asymmetry between particle and antiparticle decays. This is a plus on the theoretical side and a minus on the experimental side. The theoretical good news is that CP-violating asymmetries

in the neutral K system are naturally at the 10^{-3} level, in agreement with the measured value of $|\epsilon|$. The experimental bad news is that, no matter what the K decay process, CP-violating asymmetries or amplitudes are always going to contain the factor $s_2 s_3 s_\delta$, which is of order 10^{-3}.

It is then not so surprising that after 25 years the total evidence for CP violation in nature consists of a nonzero value of the parameter ϵ, representing CP violation in the $K - \bar{K}$ mass matrix, and one statistically significant measurement[5] of a nonzero value of the parameter ϵ', representing CP violation in the $K \to \pi\pi$ decay amplitude itself. Experiments at Fermilab[6] and at CERN[5] are continuing with ~~the aim~~ of reducing the statistical and systematic errors to a level where, if the central value of the CERN experiment holds, a nonzero value of ϵ' will be firmly established.

Such a value of ϵ' is consistent,[7–9] within rather large uncertainties of the relevant hadronic matrix element, with the three generation Standard Model. Indeed, it was suggested[10] 10 years ago that if CP violation originated in a phase of the three generation quark mixing matrix and if one-loop "penguin" diagrams, an example of which is shown in Fig. 3, give an important part of the $K \to \pi\pi$ decay amplitude, then a nonzero and measurable ϵ' would result.

While the three generation Standard Model plausibly explains CP violation as it is observed up to now, we would like to obtain additional evidence that points in this direction. If we could find several experimental processes which exhibit measurable CP violating effects and all could be fit by a single value of the *ab initio* free phase in the mixing matrix, then we will have gone a long way toward establishing this as the correct explanation. If, on the contrary, the standard model

cannot account for the results of these experiments, so much the better—we'd have evidence for physics beyond the three-generation Standard Model.

There are several ways to accomplish this; none of them is easy. One is to look for CP-violating effects in the B meson system. Here the CP-violating asymmetries potentially can be very large—of order 10^{-1} or more in some rare modes, rather than the order 10^{-3} effects in the neutral K mass matrix. The sheer numbers of B mesons estimated to be necessary to get a statistically significant effect put this exciting possibility many years in the future.[11]

Another way is to consider other K decays where CP-violating effects, although very small, may occur with a different weighting (from that in $K \to \pi\pi$) between effects originating in the mass matrix and in the decay amplitude. Although these experiments are also very difficult, there is the advantage of high intensity beams and sophisticated detectors already in existence to perform the measurements of ϵ' and search for rare K decays. Possible K decays which come to mind include $K \to 3\pi$, $K \to \gamma\gamma$, and $K \to \pi\pi\gamma$.[12–14]

THE DECAY $K_L \to \pi^0 \ell^+ \ell^-$

Another K decay in which it is possible to observe CP violation and which has emerged as the object of concentrated theoretical and experimental study is $K_L \to \pi^0 e^+ e^-$. If we define K_1 and K_2 to be the even and odd CP eigenstates, respectively, of the neutral K system, then $K_L \to \pi^0 e^+ e^-$ has three contributions:

- Through a two photon intermediate state:

$$K_2 \to \pi^0 \; \gamma\gamma \to \pi^0 e^+ e^- \quad . \tag{3}$$

This is higher order in α, but is CP conserving.

- Through the small (proportional to ϵ) part of the K_L which is K_1 due to CP violation in the mass matrix:

$$K_L \approx K_2 + \epsilon K_1$$
$$K_1 \to \pi^0 \gamma_{virtual} \to \pi^0 e^+ e^- \quad . \tag{4}$$

We call this "indirect" CP violation.

- Through the large part of the K_L which is K_2 due to CP violation in the decay amplitude:

$$K_2 \to \pi^0 \gamma_{virtual} \to \pi^0 e^+ e^- \quad . \tag{5}$$

We call this "direct" CP violation.

The question before us is the relative magnitude of these three contributions. Let us take them one at a time.

- The CP-conserving amplitude has a history of some uncertainty. If we consider the absorptive part of the amplitude corresponding to Fig. 4, it involves the product of the amplitude for $K_L \to \pi^0 \gamma\gamma$ with the QED amplitude for $\gamma\gamma \to e^+e^-$. With two real photons, there are two possible Lorentz invariant amplitudes for $K_L \to \pi^0 \gamma\gamma$. One is the coefficient of $F^{(1)}_{\mu\nu} F^{(2)}_{\mu\nu}$, which corresponds to the two photons being in a state with total angular momentum zero. Consequently, it picks up a factor of m_e when contracted with the QED amplitude, as the interactions are all chirality conserving. Its contribution to the branching ratio for $K_L \to \pi^0 e^+ e^-$ is totally negligible.[15]

The other invariant amplitude is the coefficient of a tensor which contains two more powers of momentum. One might hope for its contribution to be suppressed by angular momentum barrier factors. Because of the extra powers of momentum, in chiral perturbation theory this amplitude is put in by hand and its coefficient not predicted. An order of magnitude estimate may be obtained by pulling out the known dimensionful factors in terms of powers of f_π, and asserting that the remaining coupling strength should be of order one.[16] The branching ratio for $K_2 \to \pi^0\ e^+e^-$ is then of order 10^{-14}. Again, the CP-conserving amplitude would make a negligible contribution to the decay rate. However, an old-fashioned vector dominance pole model predicts[17] a much bigger invariant amplitude and a consequent much bigger branching ratio of order 10^{-11}, roughly at the level as that arising from the CP-violating amplitudes (see below). The applicability of such a model, however, can be challenged on the grounds that the low energy theorems and Ward identities of chiral perturbation theory are not being satisfied.[18] The consistent implementation of vector dominance with the chiral and other constraints may lead to an extra suppression factor. The final answer for this amplitude remains to be seen both theoretically and experimentally.

- We may estimate the contribution to the decay rate from the amplitude induced by "indirect" CP violation by using the identity:

$$B(K_L \to \pi^0 e^+e^-)_{\text{indirect}} \equiv B(K^+ \to \pi^+ e^+e^-) \times \frac{\tau_{K_L}}{\tau_{K^+}} \times \frac{\Gamma(K_1 \to \pi^0 e^+e^-)}{\Gamma(K^+ \to \pi^+ e^+e^-)} \times \frac{\Gamma(K_L \to \pi^0 e^+e^-)_{\text{indirect}}}{\Gamma(K_1 \to \pi^0 e^+e^-)} \quad . \tag{6}$$

Experimental values[2] of 2.7×10^{-7} and 4.2 may be inserted for the first two

factors on the righthand side. The last factor is $|\epsilon|^2$ by the definition of what we mean by "indirect" CP violation in the convention where $A_0(K \to \pi\pi)$ is real. The third factor can be measured directly one day. For the moment it is the subject of model-dependent theoretical calculations, with a value of 1 if the transition between the K and the π is $\Delta I = 1/2$. This is the case for the short-distance amplitude which involves a transition from a strange to a down quark. For $\Delta I = 3/2$, the corresponding value is 4. With both isospin amplitudes present and interfering, any value is possible.[19] Eventually, an experimental measurement of $\Gamma(K_S \to \pi^0 e^+ e^-)$ will take all the present model dependence away. For now, using a value of unity for this factor makes

$$B(K_L \to \pi^0 e^+ e^-)_{\text{indirect}} = 0.58 \times 10^{-11} \quad . \tag{7}$$

- The amplitude for "direct" CP violation comes from penguin diagrams with a photon or Z boson replacing the usual gluon and also from box diagrams with quarks (of charge $2e/3$), leptons (neutrinos) and W bosons as sides, as shown in Fig. 5. For values of $m_t << M_W$, it is the "electromagnetic penguin" that gives the dominant short-distance contribution to the amplitude, which is summarized in the Wilson coefficient of the appropriate operator,

$$Q_{7V} = \alpha \left(\bar{s}\gamma_\mu(1-\gamma_5)d\right)\left(\bar{e}\gamma^\mu e\right) \quad ,$$

and which behaves like $\ell n(m_t^2/m_c^2)$. The Z penguin and W box graph contributions are "suppressed" by a power of m_t^2/M_W^2. While this was sufficient reason to omit them in calculations a number of years ago, it is no longer

tenable when we contemplate values of $m_t \sim M_W$. In fact, the "Z penguin" and "W box" contributions add another operator,

$$Q_{7A} \;=\; \alpha\,\left(\bar{s}\gamma_\mu(1-\gamma_5)d\right)\left(\bar{e}\gamma^\mu\gamma_5 e\right) \quad ,$$

and together make contributions which become comparable to that of the "electromagnetic penguin" for large m_t.

In somewhat more detail, the CP-violating amplitude for $K_2 \to \pi^0 e^+ e^-$ is obtained by taking matrix elements of an effective Hamiltonian written in terms of the low mass quarks u, d, and s which are involved in the initial and final states of strange particle decays. The calculation proceeds by starting with the theory written in terms of the weak gauge boson and quark fields, and successively integrating out the heavy quanta from the theory. One starts at the largest momentum scale and moves to the lowest, at each stage making use of renormalization group equations to calculate the coefficients of the operators in the effective theory composed of those quarks still extant at that stage. The calculation proceeds somewhat differently than it did nine years ago,[20] in that we remove the t quark and W from the theory together.[21,22] At each stage of the calculation we will be left with an effective Hamiltonian in the form of a sum of Wilson coefficients times operators:

$$\mathcal{H} \;=\; \frac{G_F}{\sqrt{2}}\, V_{us}^* V_{ud} \sum_i C_i(\mu^2) Q_i \;+\; h.\,c. \quad , \tag{8}$$

where μ is the renormalization scale which at the final stage will be set below the charm quark mass to a value appropriate for K decays. Included in the sum in Eq. (8) are the operators Q_{7V} and Q_{7A} defined above, along with their appropriate

coefficients. The CP-violating amplitude in which we are interested is proportional to the imaginary part of the Wilson coefficients and thence the difference of the contributions from the top and charm quarks:

$$ImC_7 = s_2 s_3 s_\delta (\widetilde{C}_{7,t} - \widetilde{C}_{7,c}) \quad , \tag{9}$$

where the tilde indicates that the Kobayshi–Maskawa factor has been removed from the coefficient. Because it depends on the difference of top and charm contributions, any dependence of the individual contributions on the renormalization point, μ^2, cancels out.

There are sizable QCD corrections to the "electromagnetic penguin," which reduce its magnitude, as shown in Fig. 6. However, they do not depend much on the top quark mass or Λ_{QCD} and can be reliably calculated. Since the "Z penguin" and "W box" contributions come almost entirely from the top quark, which lies up at the weak scale, the QCD corrections to these contributions are small and are neglected.

As can be seen in Fig. 7, the coefficient C_{7V} comes largely from the "electromagnetic penguin," even after its reduction from QCD corrections. This would not be the case if the Z couplings to charged leptons were not small due to the particular value for $\sin^2\theta_W$ chosen in nature. On the other hand, the "electromagnetic penguin" cannot contribute to C_{7A}, and here it is the "Z penguin" which gives the dominant contribution, as shown in Fig. 8.

The overall decay rate due to these "direct" CP-violating amplitudes can be obtained by relating the hadronic matrix elements of the operators Q_{7V} and Q_{7A}

to that which occurs in K_{e3} decay. Then we find that

$$B(K_L \to \pi^0 e^+ e^-)_{DIRECT} = 1.0 \times 10^{-5} \, (s_2 s_3 s_\delta)^2 \, [(Im\widetilde{C}_7)^2 + (Im\widetilde{C}_{7A})^2] \quad . \quad (10)$$

The last factor, shown in Fig. 9, ranges[21] between about 0.1 and 1.0, and as $s_2 s_3 s_\delta \leq 2.5 \times 10^{-3}$ and is typically of order 10^{-3}; the corresponding branching ratio induced by this amplitude alone for $K_L \to \pi^0 e^+ e^-$ is around 10^{-11}. Note that when $m_t \gtrsim 150$ GeV, the contribution from C_{7A} overtakes that from C_{7V}, and it is the "Z penguin" and "W box," coming from the top quark with small QCD corrections, which dominate the decay rate.

Thus it appears at this point that the contributions from the CP-conserving, "indirect" CP-violating, and "direct" CP-violating amplitudes could all be comparable. The situation is entirely different than in $K \to \pi\pi$, as advertised. Hopefully, over the next few years the CP-conserving and "indirect" CP-violating amplitudes will be pinned down much better, permitting an experimental measurement of this decay to be interpreted in terms of the magnitude of the "direct" CP-violating amplitude.

THE DECAY $K_L \to \pi^0 \nu\bar{\nu}$

The decay $K_L^0 \to \pi^0 \nu_\ell \bar{\nu}_\ell$ is an even more striking example of a process in which the relative size of various contributions to the decay rate are totally different[23] than in $K \to \pi\pi$. There is of course neither an "electromagnetic penguin" nor a two-photon, CP-conserving contribution to the amplitude. Furthermore, the "indirect" CP violation arising from the neutral K mass matrix gives a negligible contribution to the decay rate. That leaves us with just the "Z penguin" and "W

box;" the V–A character of the gauge boson couplings to neutrinos allows only the operator:

$$Q_\nu \;=\; \frac{e^2}{4\pi}\,(\bar{s}_\alpha\gamma_\mu(1-\gamma_5)d_\alpha)(\bar{\nu}_\ell\gamma^\mu(1-\gamma_5)\nu_\ell) \quad . \tag{11}$$

Being CP violating, it is the imaginary part of C_ν that is required:

$$Im\; C_\nu \;=\; \left(s_2 s_3 s_\delta\right)\left(\widetilde{C}_{\nu,t} - \widetilde{C}_{\nu,c}\right) \quad , \tag{11}$$

which is totally dominated by the top quark contribution. The branching ratio (per neutrino flavor) is

$$B(K_L^0 \to \pi^0\nu_\ell\bar{\nu}_\ell) \;\approx\; 2.1\times 10^{-5}\left(s_2 s_3 s_\delta\right)^2\,|\widetilde{C}_{\nu,t} - \widetilde{C}_{\nu,c}|^2 \quad , \tag{12}$$

with the latter quantity shown in Fig. 3. Again, as $s_2 s_3 s_\delta$ is of order 10^{-3}, the branching ratio with three generations of neutrinos is of order 10^{-11}. The QCD corrections to the t quark contribution should be small, making this theoretically an ideal decay in which to study CP violation in the decay amplitude. Experimentally, the problems are, to say the least, very formidable.[23]

REFERENCES

1. KOBAYASHI, M. & T. MASKAWA. 1973. Prog. Theor. Phys. **49**:652.

2. Particle Data Group. 1986. Phys. Lett. **204B**:107.

3. JARLSKOG, C. 1985. Phys. Rev. Lett. **55**:1839; 1985. Z. Phys. **29**:491.

4. CHAU, L.-L. & W.-Y. KEUNG. 1984. Phys. Rev. Lett. **53**:1802.

5. BURKHARDT, H. *et al.* 1988. Phys. Lett. **206B**:169.

6. WOODS, M. *et al.* 1988. Phys. Rev. Lett. **60**:1695.

7. SHIFMAN, M. A. 1989. Proceedings of the 1987 International Symposium on Lepton and Photon Interactions at High Energies, Hamburg, July 27–31, 1988. W. Bartel and R. Ruckl, eds. P. 289. North Holland, Amsterdam.

8. GILMAN, F. J. International Symposium on the Production and Decay of Heavy Flavors, Stanford, September 1–5, 1987. E. Bloom and A. Fridman, eds. Vol. 535:211. New York Academy of Sciences, New York.

9. ALTARELLI, G. & P. J. FRANZINI. 1987. CERN preprint CERN–TH–4914/87 (unpublished).

10. GILMAN, F. J. & M. B. WISE. 1979. Phys. Lett. **83B**:83; and 1979. Phys. Rev. **D20**:2392.

11. For a review of the theoretical estimates of CP violation in B decay and the experimental possibilities, see K. J. FOLEY *et al.* 1988. Proceedings of the Workshop on Experiments, Detectors, and Experimental Areas for the Supercollider, Berkeley, July 7–17, 1987. R. Donaldson and M. G. D. Gilchriese,

eds. P. 701. World Scientific, Singapore; and 1988. Proceedings of the Workshop on High Sensitivity Beauty Physics at Fermilab, Fermilab, November 11–14, 1987. A. J. Slaughter, N. Lockyer, and M. Schmidt, eds. Fermilab, Batavia.

12. LI, L.-F. & L. WOLFENSTEIN. 1980. Phys. Rev. **D21**:178.

13. CHAU, L.-L. & H.-Y. CHENG. 1985. Phys. Rev. Lett. **54**:1768; and 1987. Phys. Lett. **195B**:275; 1987. J. O. EEG & I. PICEK. Phys. Lett. **196B**:391.

14. ECKER, G., A. PICH, & E. DE RAFAEL. 1988. Nucl. Phys. **B303**:665.

15. DONOGHUE, J. F., B. R. HOLSTEIN, & G. VALENCIA. 1987. Phys. Rev. **D35**:2769.

16. ECKER, G., A. PICH, & E. DE RAFAEL. 1987. Phys. Lett. **189B**:363; and 1988. Nucl. Phys. **B303**:665.

17. SEHGAL, L. M. 1988. Phys. Rev. **D38**:808; and MOROZUMI, T. & H. IWASAKI. 1988. KEK preprint KEK–TH–206 (unpublished); and FLYNN, J. & L. RANDALL. 1989. Phys. Lett. **216B**:221.

18. DE RAFAEL, E. Private communication. See also G. ECKER *et al.* 1988. CERN preprint CERN–TH.5185/88 (unpublished); and G. ECKER *et al.* 1989. Bern University preprint BUTP–89/4–BERN (unpublished).

19. In a chiral perturbation theory calculation, G. ECKER, A. PICH, & E. DE RAFAEL, 1987, Nucl. Phys. **B291**:692, obtain two values: 0.25 and 2.5.

20. GILMAN, F. J. & M. B. WISE. 1980. Phys. Rev. **D21**:3150.

21. DIB, C., I. DUNIETZ, & F. J. GILMAN. 1989. Phys. Lett. **218B**:487; and SLAC–PUB–4818. Phys. Rev. To be published.

22. Other recent work on the subject is found in J. FLYNN & L. RANDALL, 1988, LBL preprint LBL–26310 (unpublished).

23. LITTENBERG, L. 1989. Brookhaven preprint BNL 42227. Phys. Rev., to be published.

FIGURE CAPTIONS

1) Tree-level diagram involving a flavor-changing gauge boson.

2) One-loop diagrams giving rise to flavor-changing processes.

3) "Penguin" diagram which contributes to CP violation in the amplitude for $K \to \pi\pi$.

4) Diagrams involving $K_2 \to \pi^0\gamma\gamma \to \pi^0\ell^+\ell^-$ which give a CP-conserving contribution to $K_L \to \pi^0\ell^+\ell^-$.

5) Three diagrams giving a short-distance contribution to the process $K \to \pi\ell^+\ell^-$: (a) the "electromagnetic penguin;" (b) the "Z penguin;" (c) the "W box."

6) $\widetilde{C}_{7V}^{(\gamma)} = \widetilde{C}_{7V,t}^{(\gamma)} - \widetilde{C}_{7V,c}^{(\gamma)}$ as a function of m_t without (dashed curve) and with (solid curves) QCD corrections for $\Lambda_{QCD} = 100$ and 250 MeV; from Ref. 21.

7) Contributions to the coefficient $\widetilde{C}_{7V}$ from each of its components, the "electromagnetic penguin," the "Z penguin" and the "box" diagrams and the total $\widetilde{C}_{7V}$ with QCD corrections (solid curves) with $\Lambda_{QCD} = 150$ MeV, and the total coefficient without QCD corrections (dashed curve) as a function of m_t; from Ref. 21.

8) Contributions to the coefficient $\widetilde{C}_{7A}$ from the "Z penguin" and "box" diagrams as a function of m_t; from Ref. 21.

9) The quantities $(\widetilde{C}_{7V})^2$ and $(\widetilde{C}_{7A})^2$ as a function of m_t, and their sum, $(\widetilde{C}_{7V})^2 + (\widetilde{C}_{7A})^2$, with (solid curve, $\Lambda_{QCD} = 150$ MeV) and without (dashed curve)

QCD corrections, which enters the branching ratio induced for $K_L \to \pi^0 \ell^+ \ell^-$ by CP violation in the decay amplitude; from Ref. 21.

10) The quantity $|\widetilde{C}_{\nu,t} - \widetilde{C}_{\nu,c}|^2$, which enters the branching ratio for the CP-violating decay $K_L \to \pi^0 \nu_\ell \bar{\nu}_\ell$, as a function of m_t.

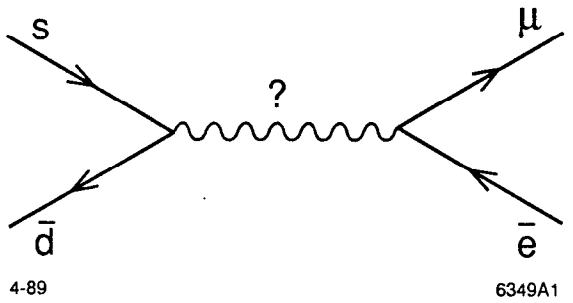

Fig. 1

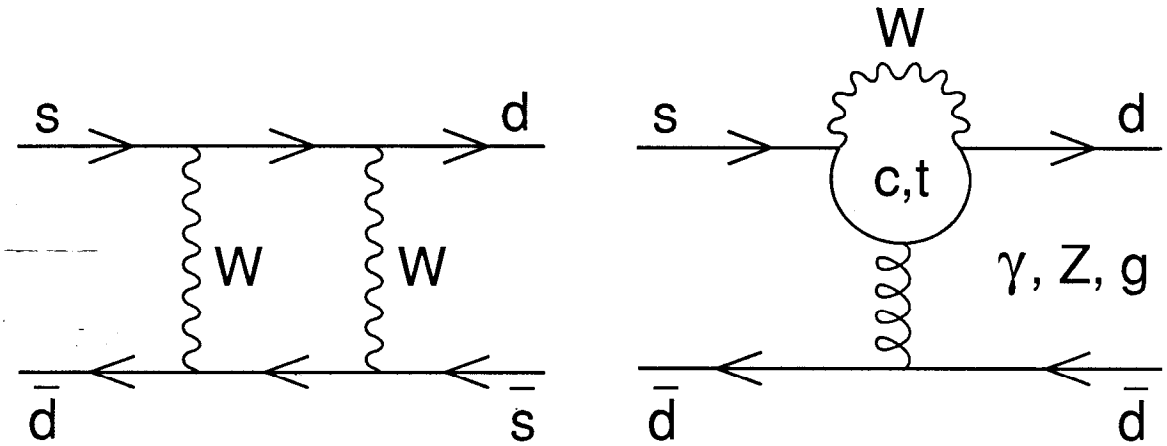

4-89

6349A2

Fig. 2

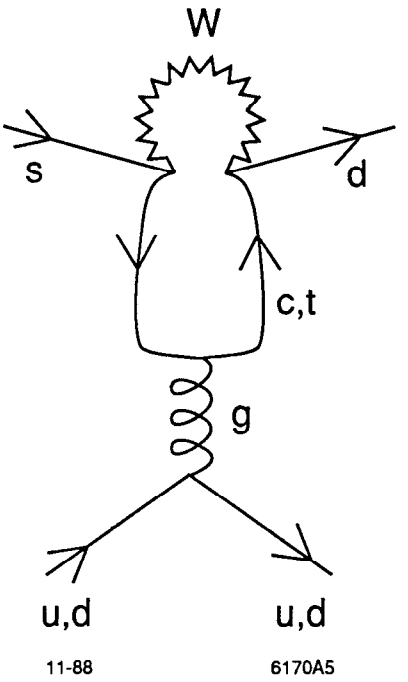

Fig. 3

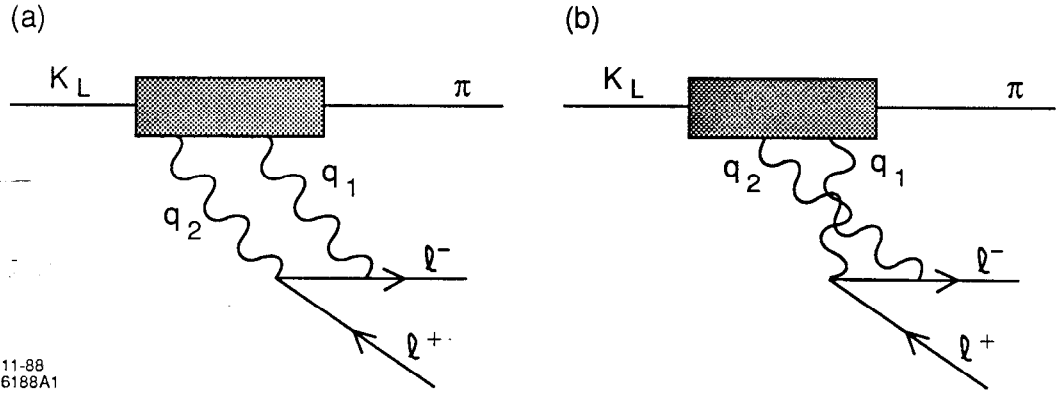

11-88
6188A1

Fig. 4

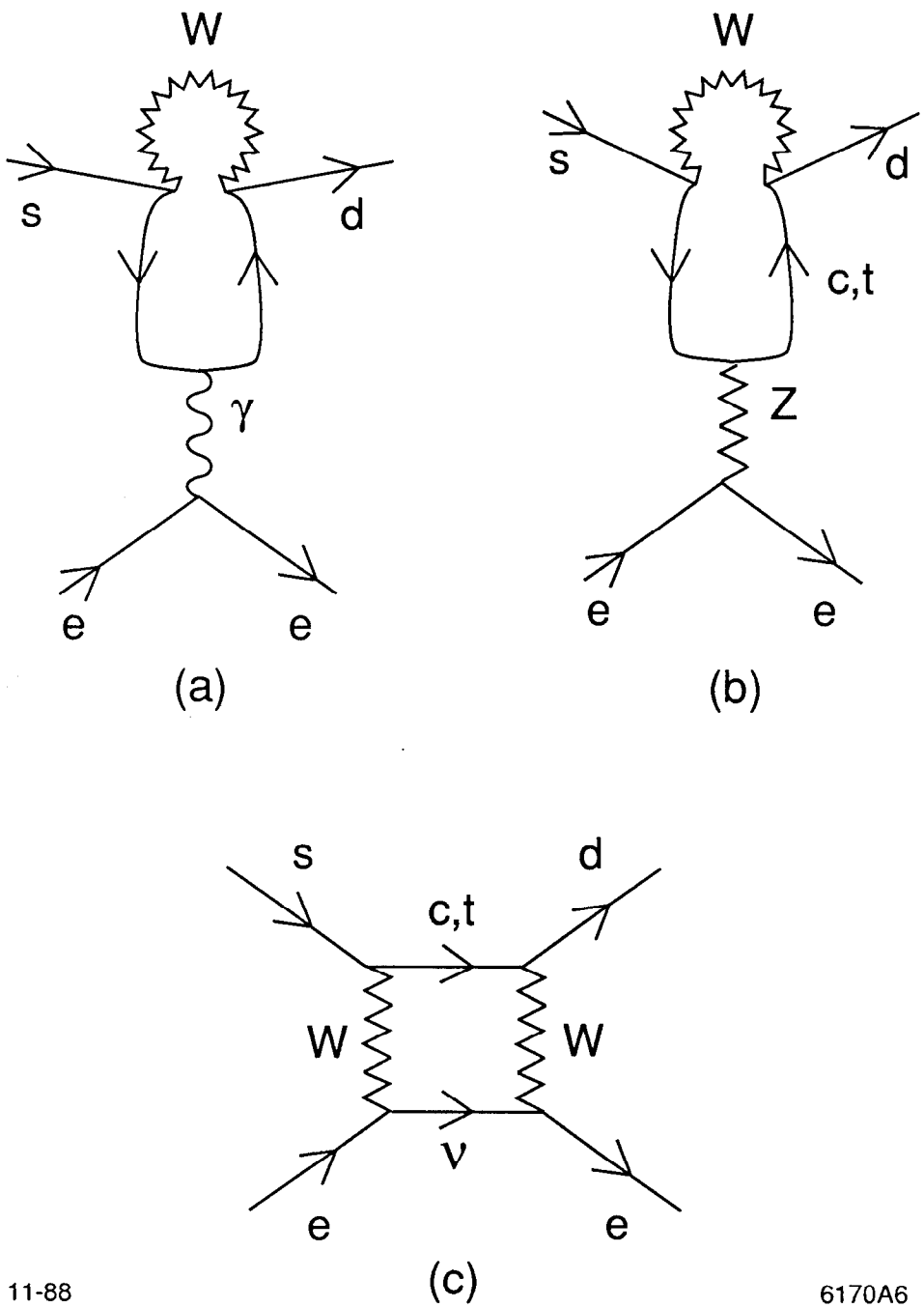

Fig. 5

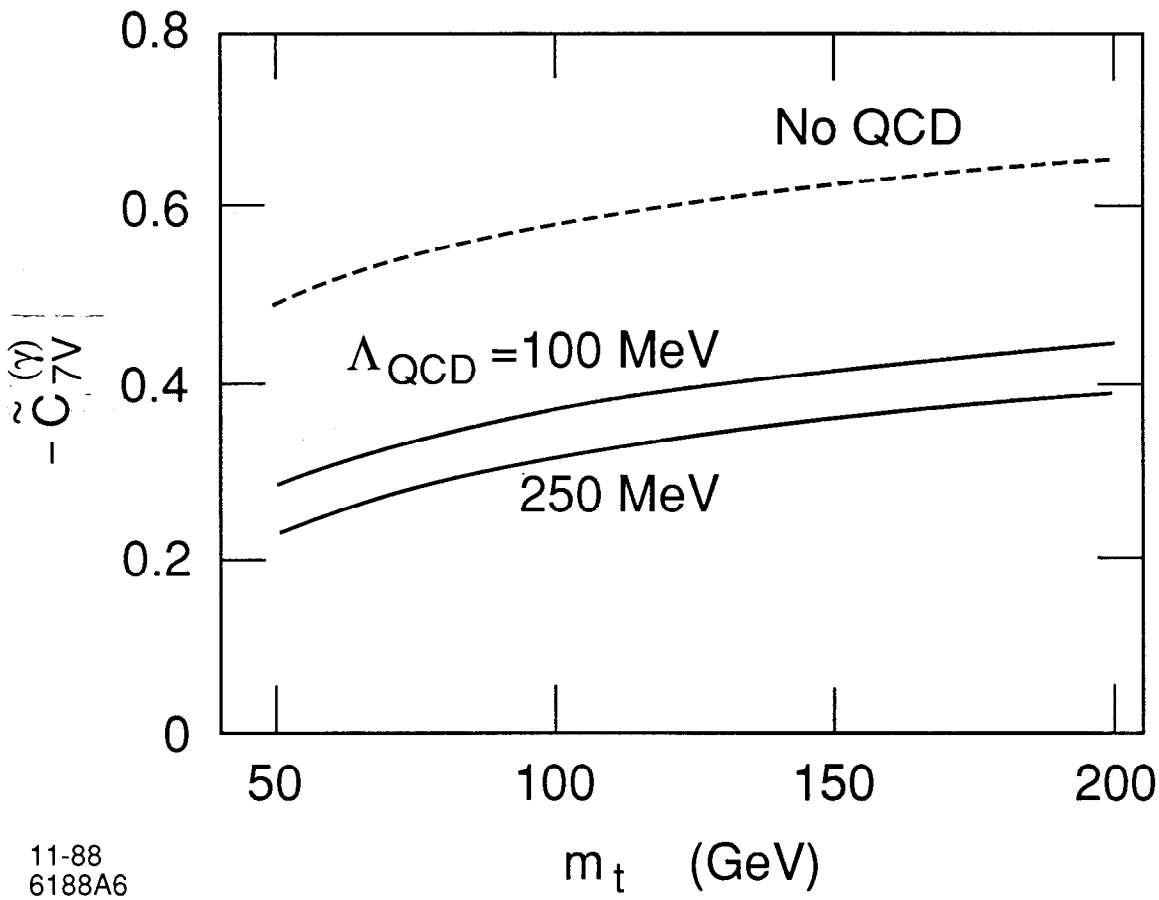
0.8
0.6
0.4
0.2
0
No QCD
Λ_{QCD} =100 MeV
250 MeV
$|\tilde{C}_7(\gamma)|$
50
100
150
200
m_t (GeV)
11-88
6188A6

Fig. 6

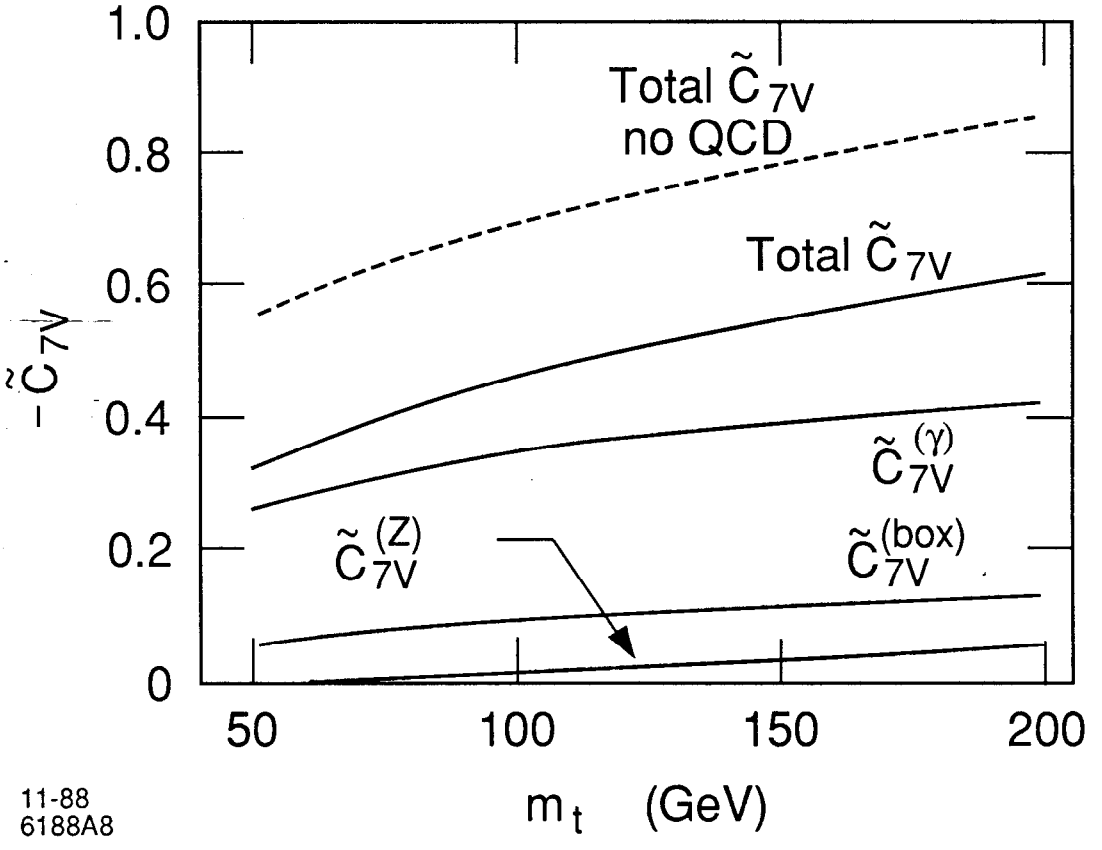

11-88
6188A8

Fig. 7

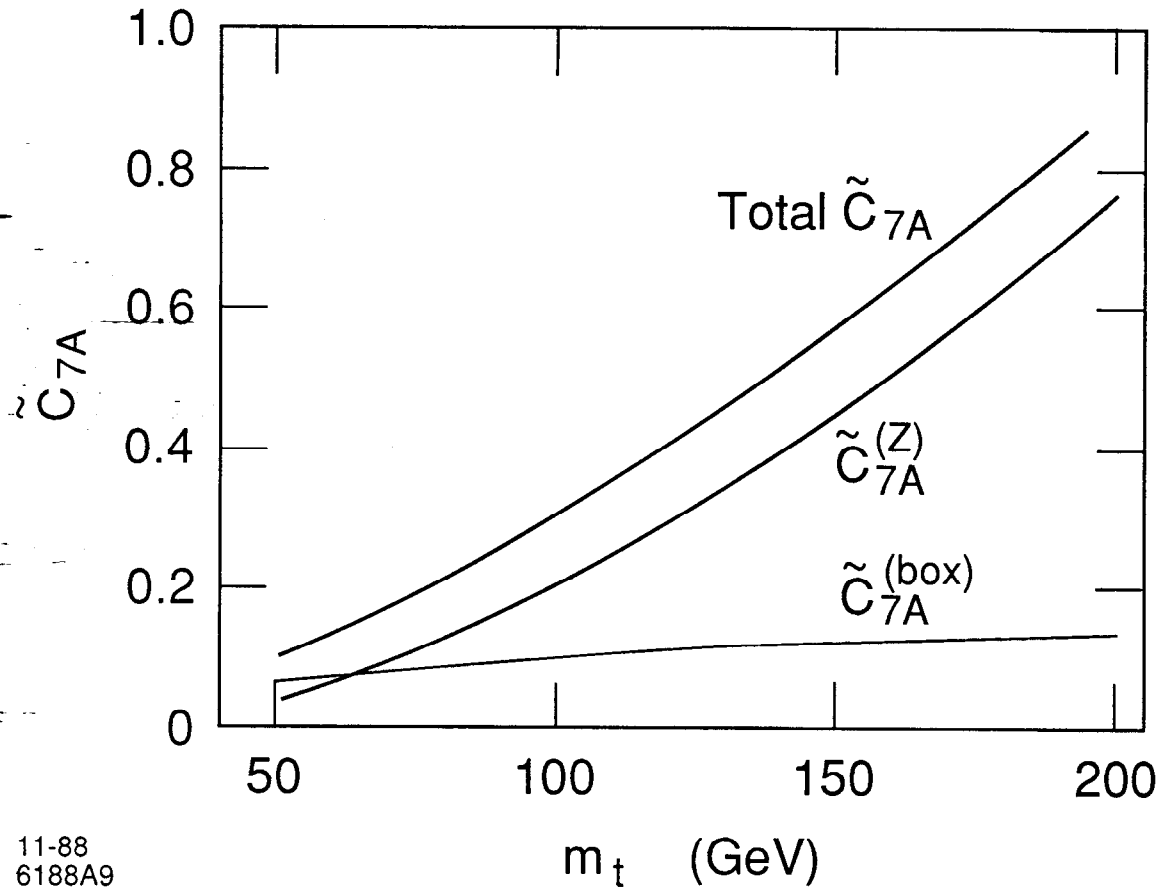

11-88
6188A9

Fig. 8

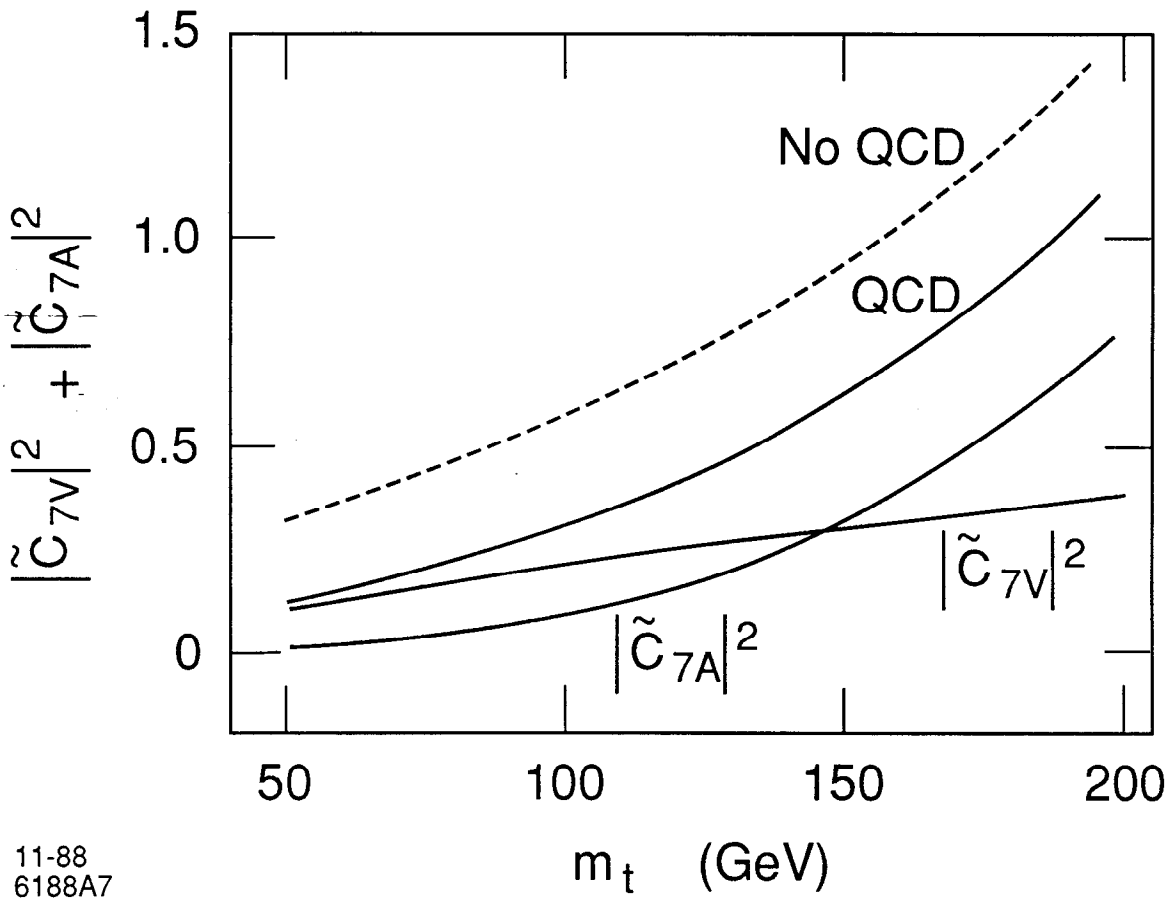

11-88
6188A7

Fig. 9

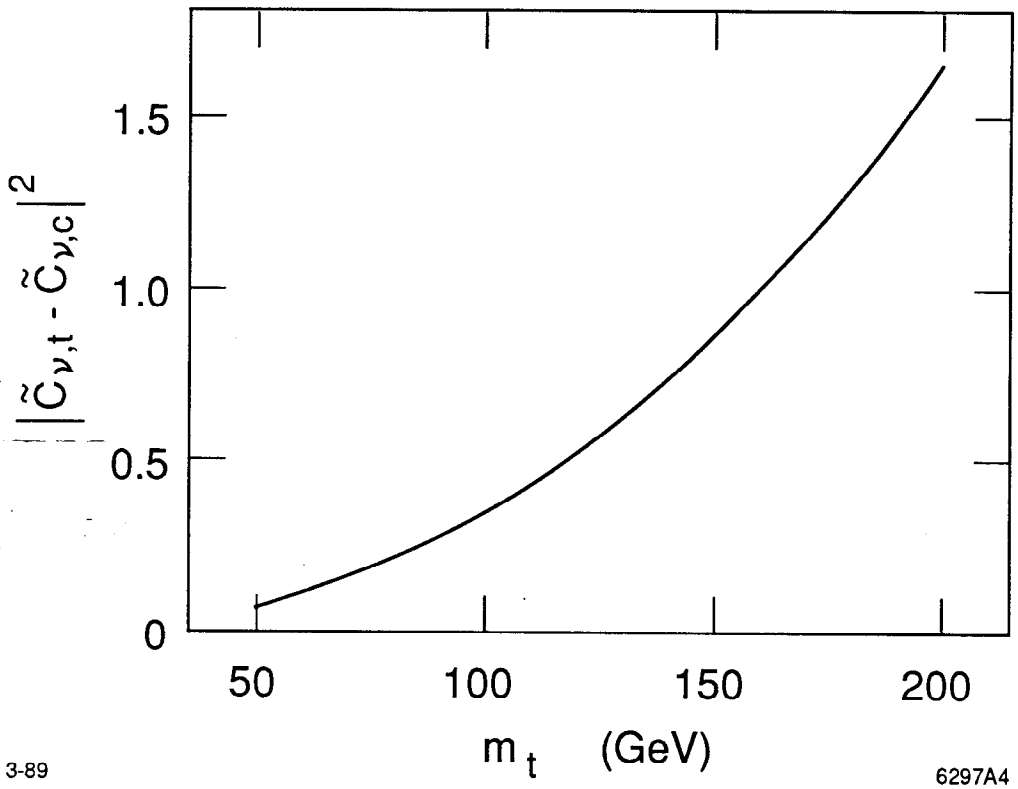
1.5
1.0
0.5
0
$|\tilde{C}_{\nu,t} - \tilde{C}_{\nu,c}|^2$
50
100
150
200
m_t (GeV)
3-89
6297A4

Fig. 10