SLAC-PUB-4782
November 1988
(E)

FINAL FOCUS SUPPORTS FOR A TEV LINEAR COLLIDER*

W. W. Ash

Stanford Linear Accelerator Center, Stanford University, Stanford, California 94309

ABSTRACT

Final focus quadrupoles supported from structures in the endcap region of a physics experiment appear to meet the high-frequency vibration and stability criteria for a TeV Linear Collider (TLC). The support stays within a ten-degree cone, minimizing interference with the experimental apparatus.

SUPPORTING BEAM

Final focus optics and a small-bore quadrupole have been discussed in early studies of a TLC.[1] The quadrupoles would be about 2 centimeters tall and 40 centimeters long and would weigh about 1.5 kg. The support must keep the vertical position of each doublet stable to a few percent of the vertical collision-point height of about 10^{-9} m.

Consider supporting the quadrupole doublet on a mechanical beam that fills the ten-degree region and anchors to a firm, seismically damped base in the endcap region as shown in Fig. 1. (A model for this is the SLD detector at the SLC. The central detector and two endcaps are roughly comparable in size. Supporting machine components from the endcaps minimizes interference with physics components.)

The tapered, cantilevered mechanical supporting beam[2] has a static deflection of about 0.6 μm and a simple vibration frequency, $\nu = \sqrt{g/y}$, of about 600 Hz.

SEISMIC ISOLATION

The seismic isolation is based on the system used in the Caltech gravity wave detector,[3] illustrated in Fig. 2. Although their detector is elegant, the basic idea in the passive part of the support is not high-tech — it is comparable to the "granite table on rubber tires" mentioned in R. Palmer's talk at this conference.

With this arrangement the Caltech group measured a seismic vibration spectrum as shown in Fig. 3, which is

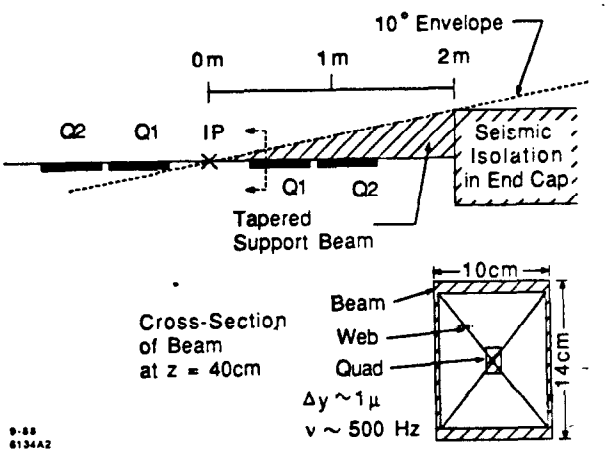

Fig. 1. Conceptual layout of a mechanical support beam for the small quadrupole doublet. The insert shows the cross section of the beam and the drawing shows the beam tapered to fill the available dead region. The beam is cantilevered from a heavy, seismically damped mass in the endcap region of a detector.

adapted from their report. (The isolation is too efficient to measure the effect directly so they used a mechanical thumper very close to their support and then scaled the vibrations down.)

The low-frequency curve is the normal Pasadena ground motion plotted directly on the curve in the region where the damping can do no good. The extrapolation is a guess at what to expect in between.

The adaptation here would exploit the mass of the endcap of the physics experiment, possible isolation in the floor under the endcap, and a suspension system inside the ten-degree cone. Seismic vibrations will drive the cantilevered beam with the amplitude enhanced at the beam's resonance. The Caltech data shows a similar resonance from the wire-support system around 800 Hz. Given the very rapid falloff of the motion, this effect is not serious.

* Work supported by the Department of Energy, contract number DE–AC03–76SF00515.

Contributed paper at the DPF Summer Study Snowmass '88, High Energy Physics in the 1990's, Snowmass, Colorado, June 27–July 15, 1988

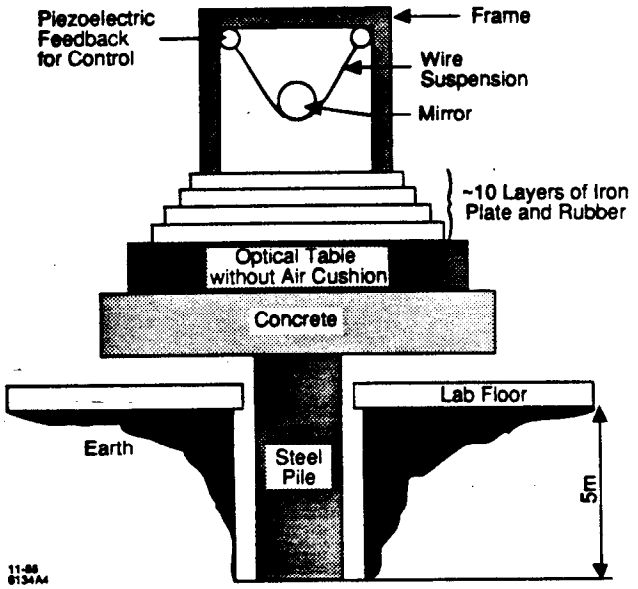

Fig. 2. Schematic layout of the passive seismic isolation for the Caltech interferometric gravity wave detector. In the application to a collider final focus, the heavy mass is the experiment's endcap, the floor might be appropriately modified, the optical table fits into the ten-degree dead region, and the final focus support beam hangs on the suspended "mirror".

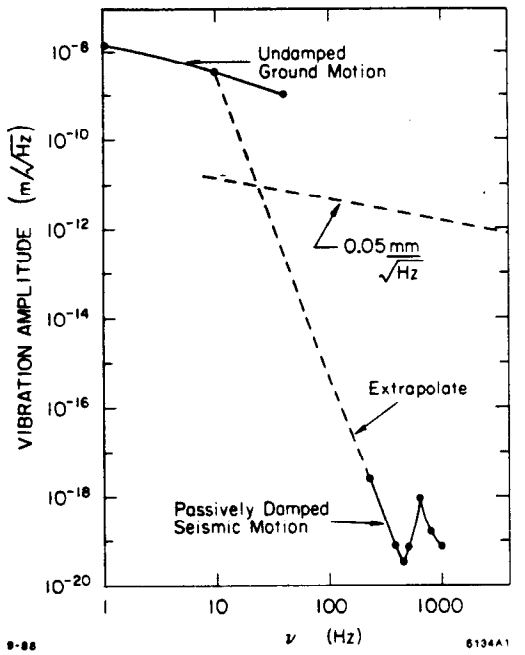

Fig. 3. This graph, adapted from the Caltech work, shows the noise measured on the kind of suspension sketched in Fig. 2. The extrapolation joins the indirect high-frequency data with undamped low-frequency seismic vibrations. The curve marked $0.05\ mm/\sqrt{Hz}$ *is an estimate of the collider requirement.*

The dashed curve falling off as $1/\sqrt{\nu}$ is the assumed criterion for supporting the linear collider final focus to give acceptably small vibrations over the frequency band.*

SLOW FEEDBACK

Above 100 Hz the isolation looks very good. Below around 10 Hz, however, the seismic noise becomes too large as the isolation becomes ineffective. Low frequency drifts, including rubber creep and thermal effects, will overpower the isolation of the doublets so something else is required to maintain alignment.

Steering coils would normally provide for this correction of the spot position. This is limited, however, to a few μm or the synchrotron radiation from the bending of the beam in the final quadrupoles may degrade performance.[1] Something else is needed to keep the system mechanically stable to around 1 μm.

The Caltech experiment has a similar problem in maintaining the orientation of their detector components. A system of low-power lasers, reflecting mirrors and photodiode detectors operate below 30 Hz on piezoelectric transducers at the final suspension. (Note: this is a simple system and not the elegant high-power optical-cavity laser system used as the primary detector.) This achieved control in angles at the μrad level adequate to keep static tolerances of μm.

A combination of this active support control and steering correctors must be used to manage the low-frequency end. These problems are probably much harder to solve than the high frequency seismic case addressed in this note.

* The curve comes by integrating a $1/\nu$ function for the square of the amplitude from frequencies too low to isolate up to those too high to affect the beam, and then requiring the overall rms amplitude to be of order 10% or less of the final spot size.

REFERENCES

1. Palmer, R. B., SLAC-AAS-36 (1988) and Oide, K., SLAC-PUB-4660 (June 1988).
2. Roark, R. J. and Young, W. C., *Formulas for Stress and Strain*, Fifth Edition, McGraw-Hill (1982). The standard formulas for simple bending are tabulated on page 98 and the conversion factors for tapered sections are given on page 174. The stiffening factor of about 50 requires some extrapolation.
3. Suspension systems and seismic background are discussed in the NSF proposals for a Laser Interferometer Gravitational Wave Observatory by Caltech and MIT. The relevance was noted by W. Atwood (SLAC) during visits to the site and in discussions there with R. W. P. Driver. For a more thorough discussion, see Fischer, G. E. and Mayoud, M., *Some Thoughts on Linear Collider Alignment and Mechnical Stability*, CERN-LEP-RF-SU-88-07 (March 1988).