SLAC-PUB-16543

Development of a cryogenic hydrogen microjet for high-intensity, high-repetition rate experiments[a)]

J. B. Kim,[1, b)] S. Göde,[1, c)] and S. Glenzer[1]
SLAC National Accelerator Laboratory, Menlo Park, CA, USA

(Dated: 6 June 2016)

The advent of high-intensity, high-repetition-rate lasers has led to the need for replenishing targets of interest for high energy density sciences. We describe the design and characterization of a cryogenic microjet source, which can deliver a continuous stream of liquid hydrogen with a diameter of a few microns. The jet has been imaged at 1 μm resolution by shadowgraphy with a short pulse laser. The pointing stability has been measured at well below a mrad, for a stable free-standing filament of solid-density hydrogen.

I. INTRODUCTION

The development of high-intensity laser science has led to a broad effort in laser-driven ion acceleration, particularly proton acceleration. As the field has advanced, the targets have become correspondingly more sophisticated, and most acceleration mechanisms benefit from microns-thick or thinner targets. High-repetition rate lasers have led to the development of continuous targets, from wire/tape spools or from a liquid jet.

Solid-density hydrogen presents attractive qualities for laser ion acceleration. Hydrogen/deuterium can provide a pure source of protons and deuterons, free from the contaminant ions typically observed. The electron density is 5×10^{22} cm^{-3}; with relativistic laser intensities, the critical density can approach this value, allowing for efficient energy coupling.

We describe the design and characterization of a cryogenic jet capable of delivering a continuous few-micron thick stream of liquid hydrogen.

II. DESIGN

The principles of microjet systems were laid down with the introduction of water microjets almost 30 years ago.[1] Briefly, the desired liquid is injected into a vacuum chamber through a small aperture which defines the diameter of the jet. Cryogenic microjets extend this technique by cooling to liquefy a precursor gas.

Our design is derived from the hydrogen microjet source developed at Rostock,[2] which has been used for XUV and optical laser heating experiments at FLASH.[3,4] The key components of this source are electron microscope apertures as nozzles and sintered filters to prevent clogging.

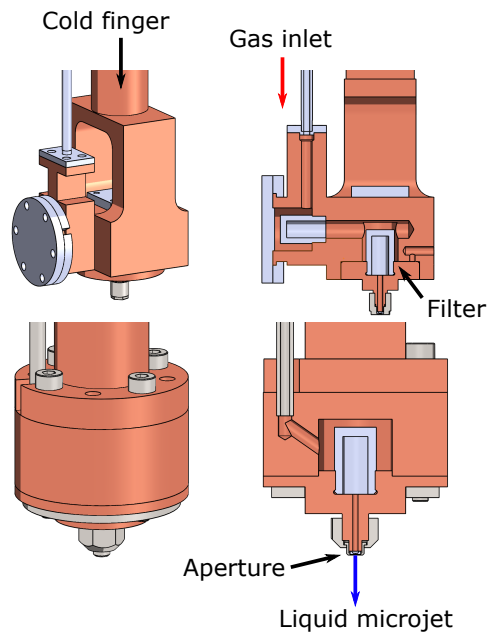

FIG. 1. Detailed view of the jet sources. Version characterized more thoroughly here is in the top row, and a newer version is shown in the bottom row. Cutaway view of both versions is on the right.

Previous cryogenic microjet designs have used a glass capillary for the nozzle, as glass-pulling techniques make the fabrication of smooth micron-sized holes routine, allowing for the production of laminar microjets.[5–7] However, metal aperture discs offer better thermal conductivity, and replacing clogged apertures is a comparatively quick task. We use apertures designed for electron microscopes, with standard apertures down to ø5 μm, and custom ordered apertures can be obtained down to ø2 μm.

Clogging is a major concern for all microjet sources, as small particulates can quickly block the nozzle. We have improved on the reliability of the cryogenic microjet by focusing on this issue. All machined parts are mechanically and/or chemically cleaned, then inspected for the removal of burrs. Sintered steel filters with nominal pore sizes of 0.5 μm are placed in the gas line, and a second (or even third) filter is inserted shortly before the aperture.

[a)] Contributed paper published as part of the Proceedings of the 21st Topical Conference on High-Temperature Plasma Diagnostics, Madison, Wisconsin, June, 2016.

[b)] kimjb@slac.stanford.edu
[c)] European XFEL

This material is based upon work supported by the U.S. Department of Energy, Office of Science, Office of Basic Energy Sciences, HEDS High Energy Density Sciences program, under Contract No. DE-AC02-76SF00515.

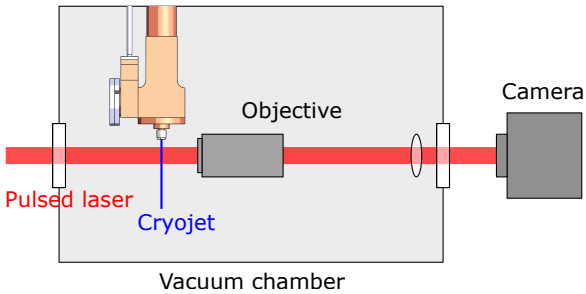

FIG. 2. Scheme for optical imaging of the cryogenic microjet with pulsed laser illumination.

The body of the cryojet source is made from OFHC copper for cryogenic thermal conductivity, and vacuum/chemical compatibility. All thermal and fluid seals are made with indium as is standard for cryogenic systems, and all other structural elements are made of stainless steel. The cryojet is mounted to a liquid helium continuous flow cryostat. These cryostats are compact enough for integration to most laser facility target chambers, have minimal vibrations, and can provide several watts of cooling power to liquefy gases.

Two iterations of the cryogenic jet assembly are shown in Fig. 1. The first relies on a minimum of thermal interfaces and a flange-welded joint for sealing the gas entrance. The second adds additional thermal interfaces in exchange for compactness within a reasonably-sized thermal radiation shield. The performance of both is qualitatively similar, though all characterization data shown here is from the first version.

The precursor gas is liquefied in the source body, filtered, then injected into the vacuum chamber through the nozzle. In addition to hydrogen, this method has been used to make microjets of liquid deuterium and a 50:50 H_2/D_2 mix. These were used for experiments at the MEC[8] and Titan lasers,[9] but have not been as thoroughly characterized as the hydrogen jet.

III. CHARACTERIZATION

A. Stroboscopic shadowgraphy setup

Visual inspection of the jet illuminated by a light source is sufficient for determining whether the jet is continuous or broken, but in order to characterize and align the jet, an optical imaging setup is needed with sufficient spatial and temporal resolution. The diameter of the jet is several microns, requiring a spatial resolution of a micron. The speed of the jet determines the required temporal resolution. Under typical operating conditions P_0 <100 psig. Assuming incompressible flow over an ideal aperture, Bernoulli's principle gives $v = \sqrt{2P_0/\rho}$, and the jet speed is expected to be 50-100 m/s; to maintain spatial resolution, temporal resolution of 10 ns or less is needed. A pulsed laser can serve as stroboscopic illumination to achieve the required temporal resolution, while the use of microscope objective can achieve micron resolution.

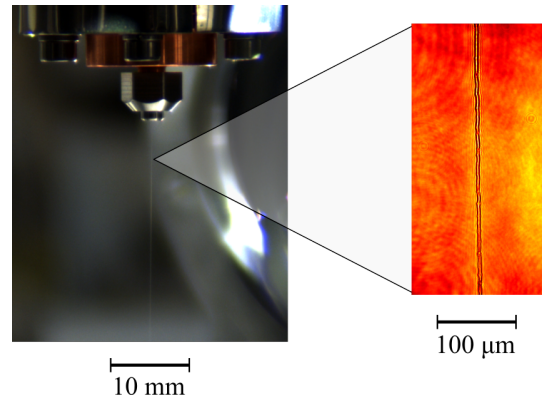

FIG. 3. A photograph of a cryogenic hydrogen microjet (left) with a corresponding microscope image (right).

The imaging setup follows that of an optical microscope with brightfield illumination, as shown in Fig. 2. The jet is imaged along two axes for unambiguous alignment of the jet into focus, though only one is shown in the schematic image. 10× or 20× long working distance objectives are used to magnify the view onto imaging cameras located outside the vacuum target chamber, and a USAF test target was used to confirm resolution down to 1 μm.

Pulsed illumination is provided by the stretched and attenuated output from an 800 nm Ti:Saph laser system, with pulse widths ∼1 ps and pulse energies ∼1 μJ. The improvement in imaging quality is shown in Fig. 3 from a barely-visible filament to a detailed stream.

B. Cryojet morphology

For a reliable target, we want the jet to have laminar flow and remain continuous for several millimeters. For a axisymmetric liquid jet, the primary limitations are the Rayleigh instability and turbulent flow.

At high enough pressures, turbulent flow is expected. Flow in a tube is expected to remain laminar for Reynolds number Re below 2000. However, this is only an approximation for the thin-wall aperture nozzles used here, and the onset of turbulence is also sensitive to the roughness of the nozzle. For hydrogen and a ø5 μm tube, $Re \leq 2000$ is achieved at pressures of 40 psig and below. We did not observe any difference in the appearance of the jet from 10 psig to 100 psig. Laminar flow is present up to at least 100 psig.

The Rayleigh instability describes the breakup of a liquid jet into droplets by surface tension. Due to the small diameter, most microjets spontaneously break to droplets in at most a few mm. For inviscid liquids, the length to

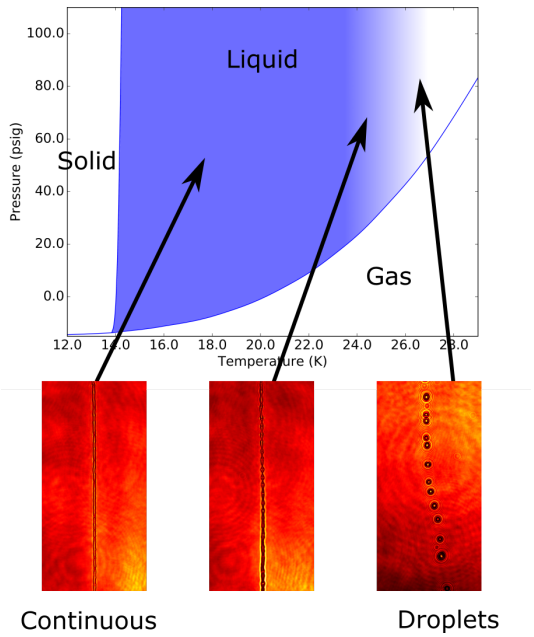

FIG. 4. Phase diagram of hydrogen. The shaded area is the approximate region which results in stable microjets. Higher temperatures result in droplet formation before the jet freezes.

droplet breakup is $l \approx 12v\sqrt{\rho d_0^3/\sigma}$, where d_0 is the diameter of the jet and σ is the surface tension. In the case of a ø5 μm hydrogen jet, breakup is expected in only 1 mm.

However, under most tested operating conditions, the hydrogen microjets remain continuous for several cm, much longer than expected. In a vacuum, the microjets cool by evaporation, and can freeze before Rayleigh breakup.[6]. Visually, this can be seen as crystallites making an apparent rough structure.

As the initial temperature of the liquid hydrogen is increased, it takes longer for evaporative cooling to freeze the jet. We have found that the jet begins to appear broken near 24 K and breaks into a stream of droplets at 25 K and above (Fig. 4). There is little dependence on pressure observed. This is not surprising, as the evaporative cooling rate of a jet has little dependence on the initial pressure.[1]

C. Cryojet pointing stability

In addition to having a continuously replenishing target, it is desirable to maximize the pointing stability of the cryojet. High-intensity lasers have focal spots of a few microns, and the few-micron-diameter jet needs to be spatially overlapped. High-energy lasers will also create a blast wave that could damage the nozzle, unless the laser interaction point is sufficiently far away. In our laser experiments,[9,10] we have avoided damage by focusing the laser on the microjet 1-2 cm from the nozzle.

The pointing stability can be readily obtained from the microscope images. For a ø5 μm jet, we scanned the pressure and temperature over the liquid range shown in Fig. 4. At low pressures of 10 psig and below, the standard deviation of the pointing has been measured up to 1.6 mrad. At high temperatures near the droplet transition, the pointing stability also suffers, steadily increasing until complete spontaneous droplet formation; presumably the additional time before the jet freezing affords more time for the instabilities to propagate.

We have measured pointing stability with a standard deviation down to 0.16 mrad; more typical values are 0.2-0.3 mrad over a wide range of pressures (40-100 psig) and temperatures (15-23 K), with only a weak dependence over this range. For a laser interaction point 1 cm from the nozzle, this would correspond to a 90% probability within a window down to 5 μm or more typically 7-10 μm. This stability is sufficient for reasonable hit statistics with high-intensity laser facilities.

IV. CONCLUSIONS

We have developed and characterized a cryogenic hydrogen microjet compatible with high-intensity and/or high-repetition-rate laser-plasma experiments. This cryogenic hydrogen jet source has been fielded at the DRACO laser at HZDR,[10] the Titan laser at LLNL,[9] and both the optical and x-ray lasers at the MEC hutch at SLAC.[8,9,11]

ACKNOWLEDGMENTS

Work supported by the U.S. Department of Energy under contract number DE-AC02-76SF00515, as well as the DOE Office of Science, Fusion Energy Science under FWP 100182.

[1] M. Faubel, S. Schlemmer, and J. Toennies, Z. Phys. D: At., Mol. Clusters **10**, 269 (1988).
[2] S. Toleikis, *et al.*, High Energy Density Phys. **6**, 15 (2010).
[3] U. Zastrau, *et al.*, Phys. Rev. Lett. **112**, 105002 (2014).
[4] U. Zastrau, *et al.*, J. Phys. B **48**, 224004 (2015).
[5] P. A. C. Jansson, U. Vogt, and H. M. Hertz, Rev. Sci. Instrum. **76**, 043503 (2005).
[6] M. Kühnel, J. M. Fernández, G. Tejeda, A. Kalinin, S. Montero, and R. E. Grisenti, Phys. Rev. Lett. **106**, 245301 (2011).
[7] R. A. C. Fraga, A. Kalinin, M. Kühnel, D. C. Hochhaus, A. Schottelius, J. Polz, M. C. Kaluza, P. Neumayer, and R. E. Grisenti, Rev. Sci. Instrum. **83**, 025102 (2012).
[8] S. H. Glenzer, *et al.*, J. Phys. B **49**, 092001 (2016).
[9] M. Gauthier, *et al.*, Rev. Sci. Instrum. (submitted for the 21st Topical Conference on High-Temperature Plasma Diagnostics).
[10] S. Göde, *et al.*, (in preparation).
[11] L. B. Fletcher, *et al.*, Rev. Sci. Instrum. (submitted for the 21st Topical Conference on High-Temperature Plasma Diagnostics).