BECKHOFF

EtherCAT –
The Automation Backbone
Made by Beckhoff

Dr. Guido Beckmann
Technology Marketing

Bus System and Control Architecture

- Super Fast Controls (such as PC based Controls) **require** a super fast bus technology!

Execution time for 1000 PLC commands (µs)

	Core0	Core1	Core2	Core3
bool	0.887	0.894	0.898	0.895
byte	0.672	0.682	0.681	0.688
word	0.613	0.614	0.626	0.617
dword	0.575	0.583	0.583	0.583
sint	3.463	3.472	3.473	3.474
int	3.473	3.484	3.482	3.482
dint	3.487	3.497	3.491	3.496
real	1.813	1.822	1.818	1.820
lreal	4.761	4.769	4.770	4.769

Brutus: WW1 Aircraft Engine with
47 l (!) Displacement and
740 h.p. (550 kW) Power,

but inadequate tires….

Brutus: Experimental Vehicle with WW1 BMW Aircraft engine, built by Auto & Technik Museum Sinsheim, Germany

EtherCAT®

Th… …abus.

Is Ethernet the right method of choice?
Or, what makes the difference…

Industrial Ethernet | Bandwidth utilization

BECKHOFF

- Minimum Ethernet Frame: 84 Bytes!

  - For Industrial Automation:
    usually only a few Bytes per device are needed
  - @ 4 Bytes Process Data: Only 4,75% Application Data Ratio

- 2 Frames <u>per device</u> Controller → Device: Output data
  Device → Controller: Input data

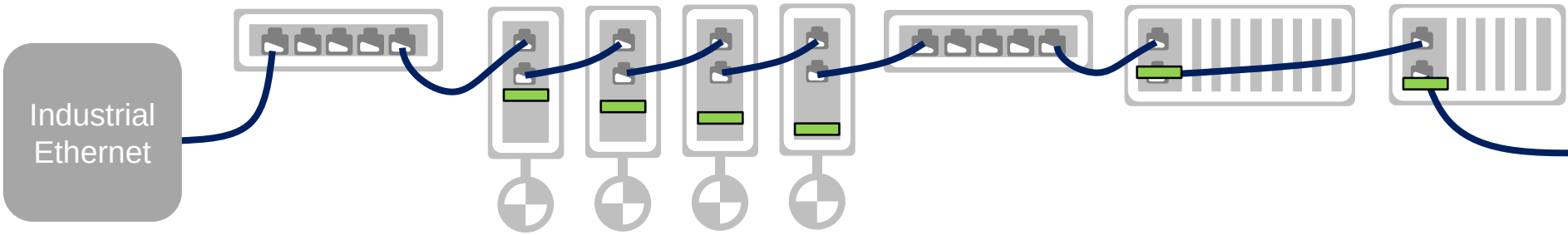

EtherCAT Functional Principle: Processing on the Fly

BECKHOFF

- Process data is extracted and inserted on the fly
  - One frame for all Slaves
  - Minimal protocol overhead via logical addressing
    - Assigned automatically by the master during boot-up
  - Process data size individual per slave: 1 bit…60 kByte
  - Communication completely in hardware: maximum (+ predictable!) performance

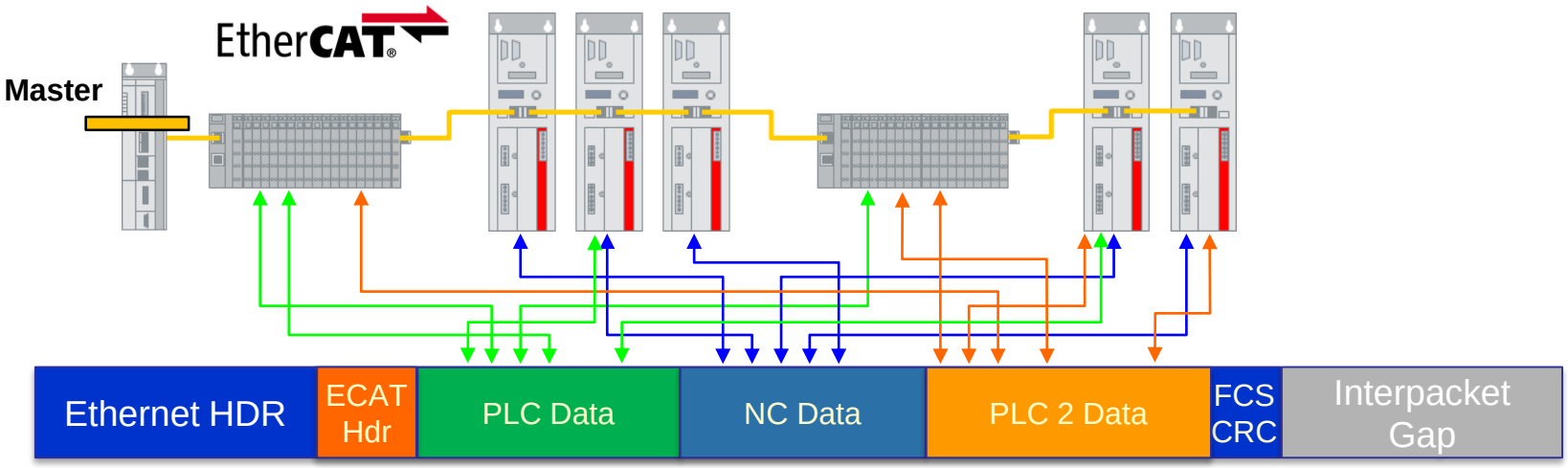

EtherCAT Functional Principle: Processing on the Fly

BECKHOFF

- Process data is extracted and inserted on the fly
  - One frame for all Slaves
  - Minimal protocol overhead via logical addressing
    - Assigned <u>automatically</u> by the master during boot-up
  - Process data size individual per slave: 1 bit…60 kByte
  - Communication completely in hardware: maximum (+ predictable!) performance

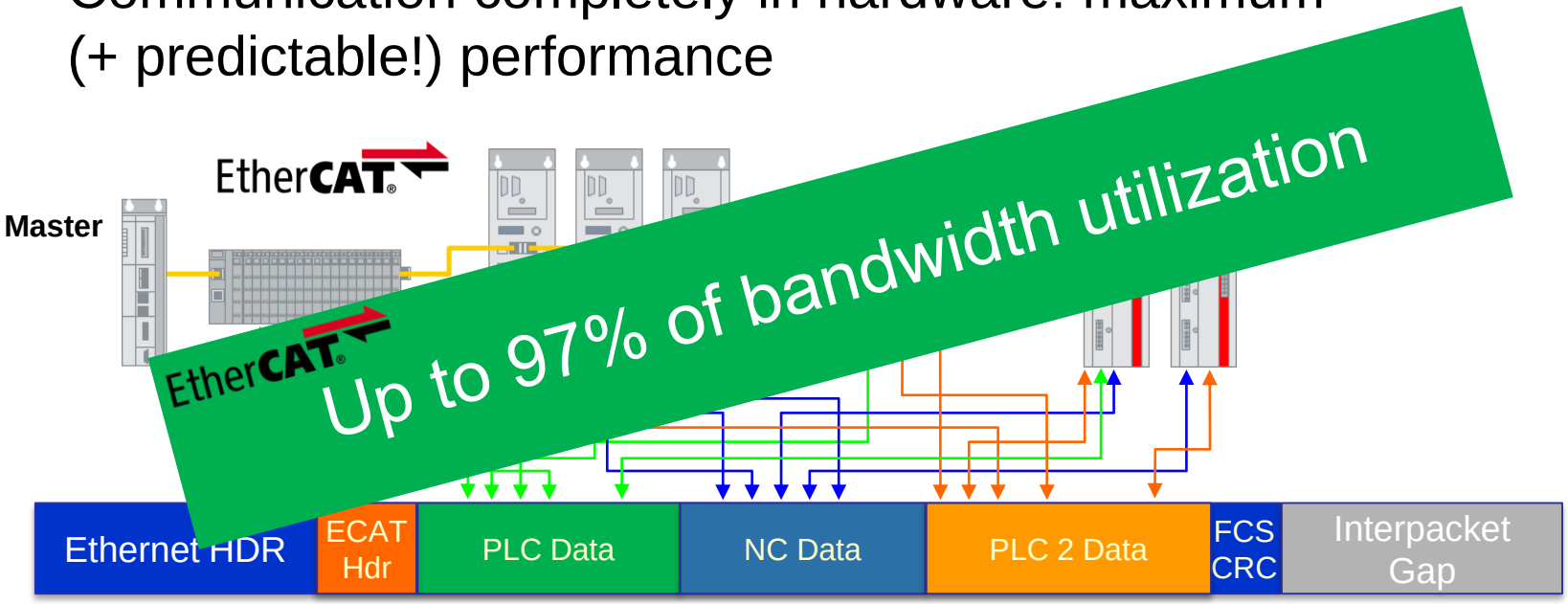

Industrial Ethernet | Switch Delays

BECKHOFF

- Switches are commonly used for Ethernet
  - Almost all Switches use „Store & Forward“
- Line Topology means cascaded Switches
- Example: Full frame, 20 nodes in line topology: 2,5 ms!

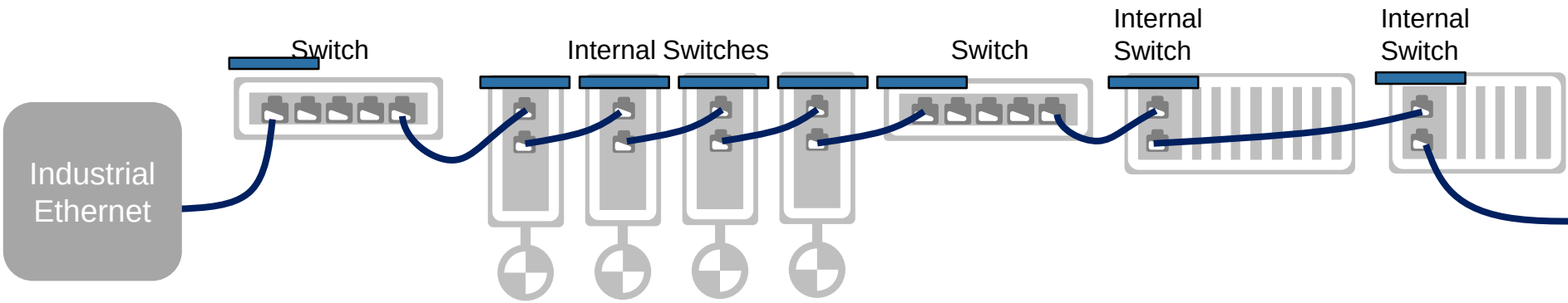

- EtherCAT with Processing on the fly: Delay ~20µs@20 nodes

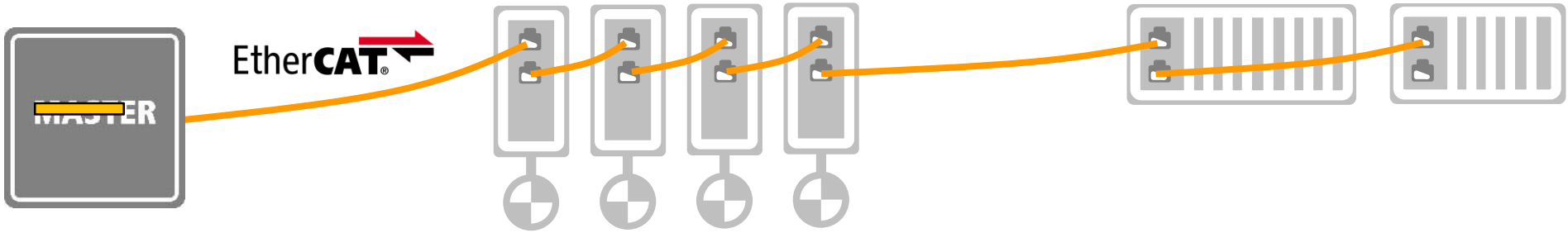

Industrial Ethernet | Switch Delays

BECKHOFF

- Switches are commonly used for Ethernet
  - Almost all Switches use „Store & Forward“
- Line Topology means cascaded Switches
- Example: Full frame, 20 nodes in line topology: 2,5 ms!

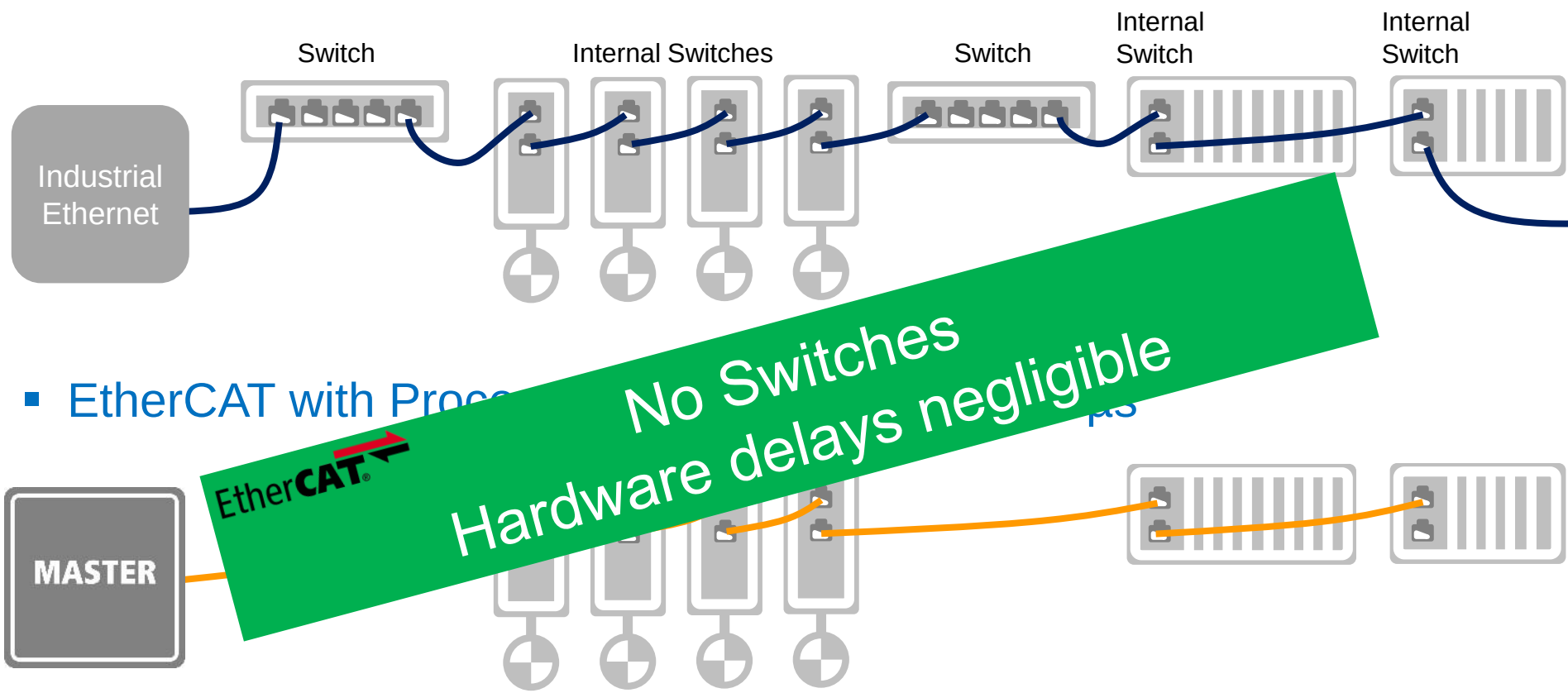

- EtherCAT with Proce

Industrial Ethernet | Addressing

- Ethernet uses addressing by MAC on Layer 2
  - (-) Device Replacement
- or TCP/IP on Layer 3 / 4
  - (-) IP-Address management
  - (-) Software Stacks involved

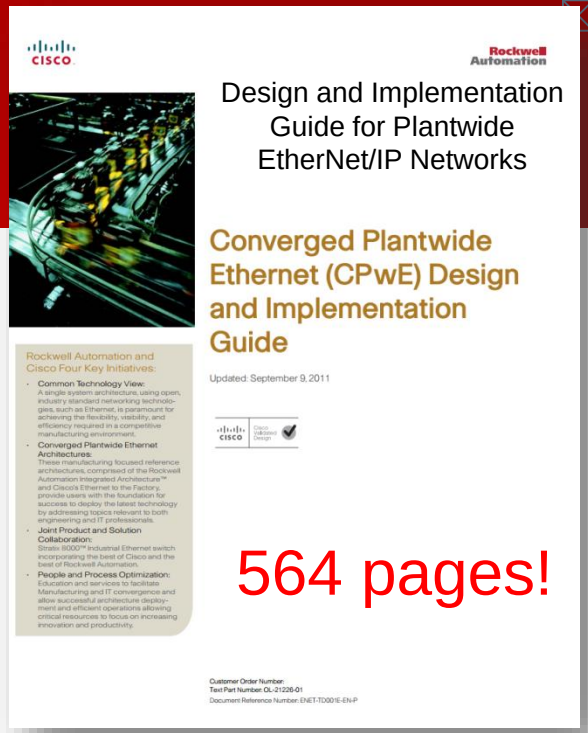

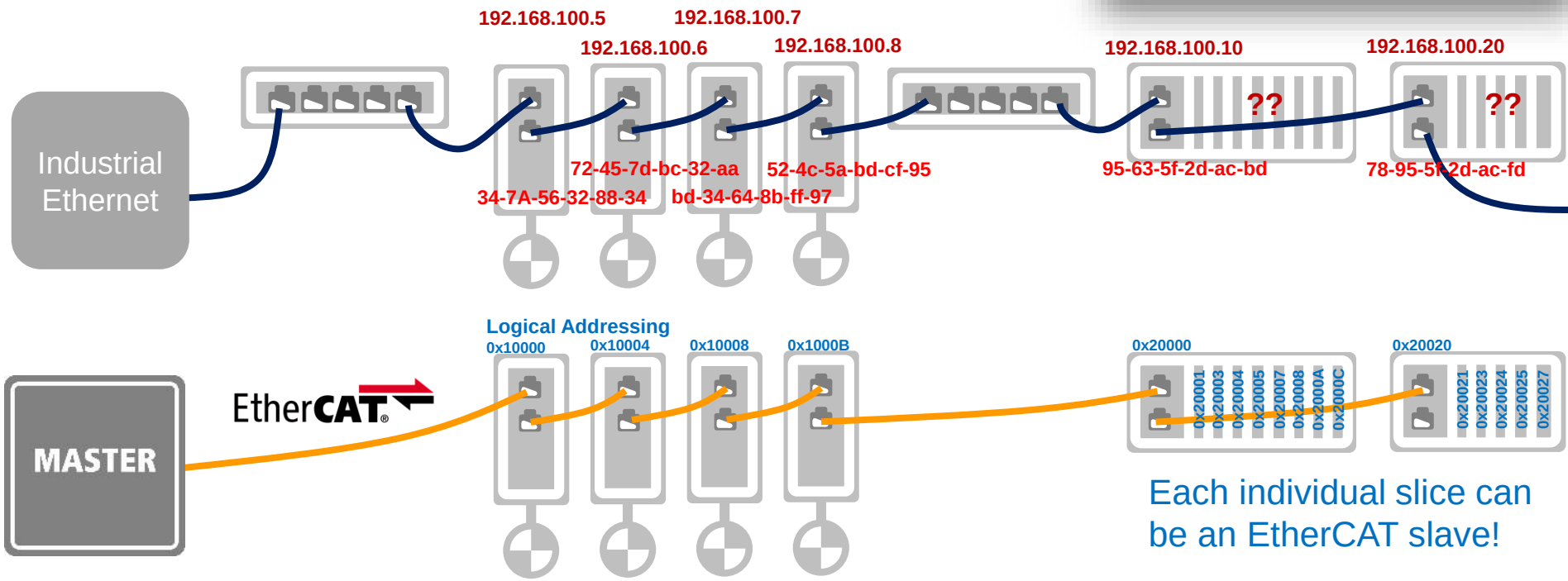

Industrial Ethernet | Addressing

BECKHOFF

- Ethernet uses addressing by MAC on Layer 2
  - (-) Device Replacement
- or TCP/IP on Layer 3 / 4
  - (-) IP-Address management
  - (-) Software Stacks involved

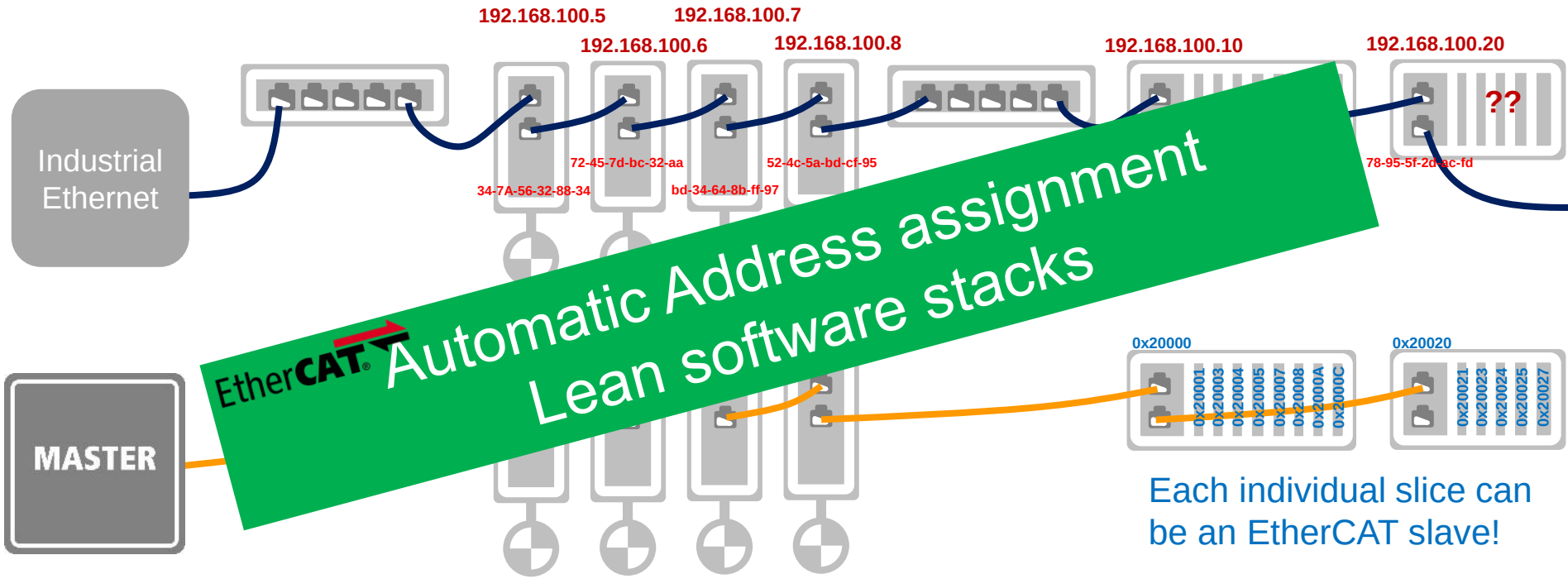

Industrial Ethernet | Stack Delays

BECKHOFF

- Industrial Ethernet Protocol Stacks are **BIG**

- Processing them needs **TIME**

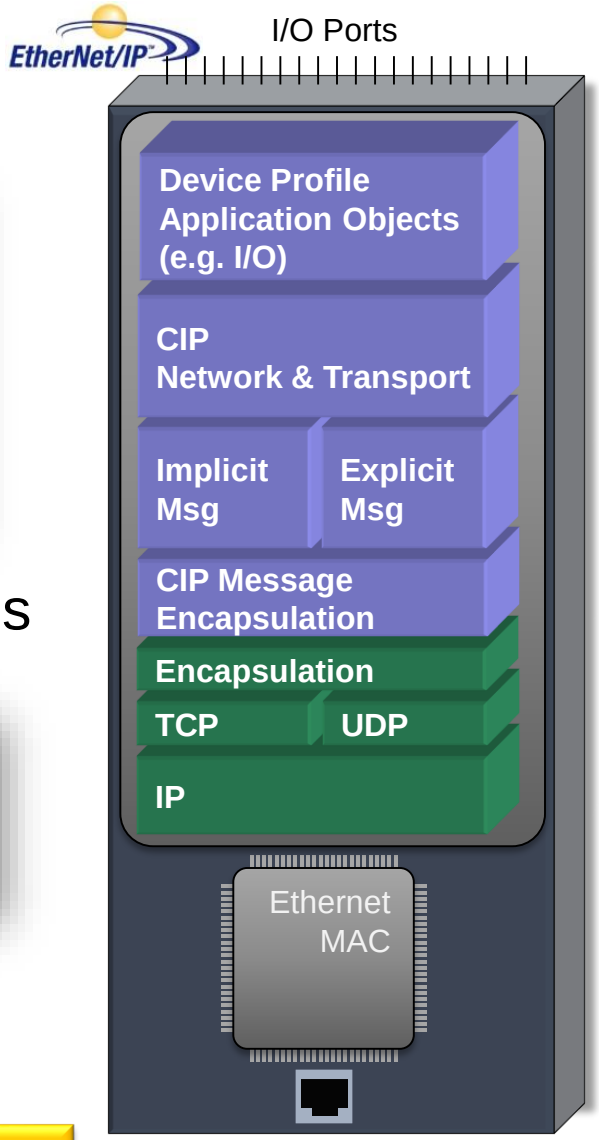

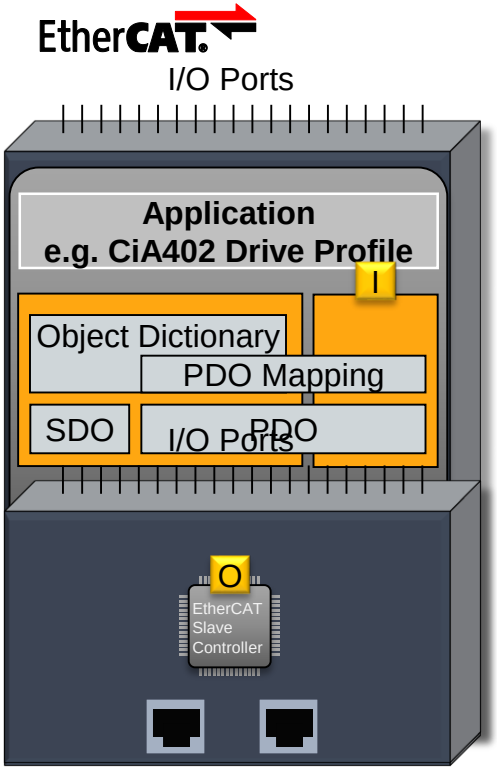

Out In

Industrial Ethernet | Stack Delays

BECKHOFF

- Industrial Ethernet Protocol Stacks are **BIG**

- Processing them needs **TIME**

Lean (or even no) protocol stacks

EtherCAT: Performance Breakthrough

BECKHOFF

- EtherCAT Technology Group (ETG) is worlds largest Fieldbus organization
  - **3770 members** (June 2016)
- Outstanding adoption rate

© harvepino - Fotolia.com

Outstanding Adoption Rate

June 2016

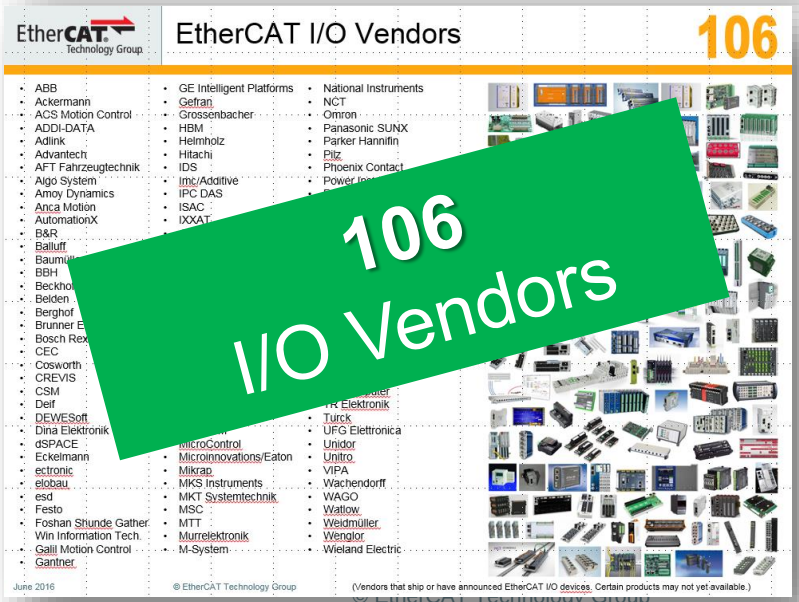

© EtherCAT Technology Group

EtherCAT – Made by Beckhoff

BECKHOFF

EtherCAT Terminals

Embedded PC

EtherCAT Box

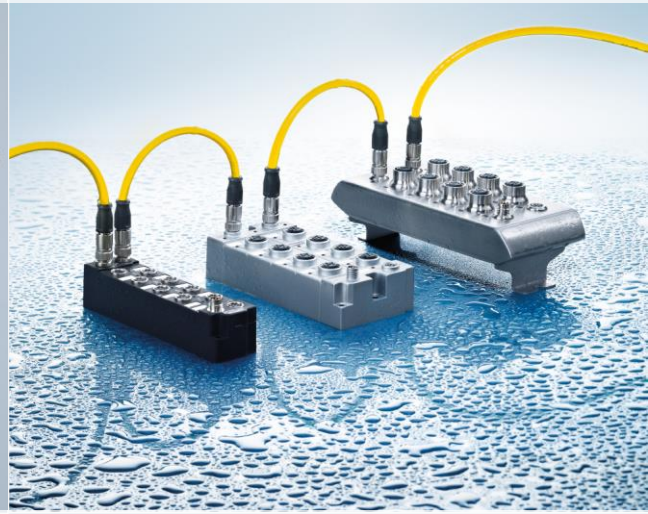

Servo Drives

EtherCAT Plug-in Modules

Industrial PC

System overview – Flexible Topology

BECKHOFF

Flexible topology

Ethernet TCP/IP

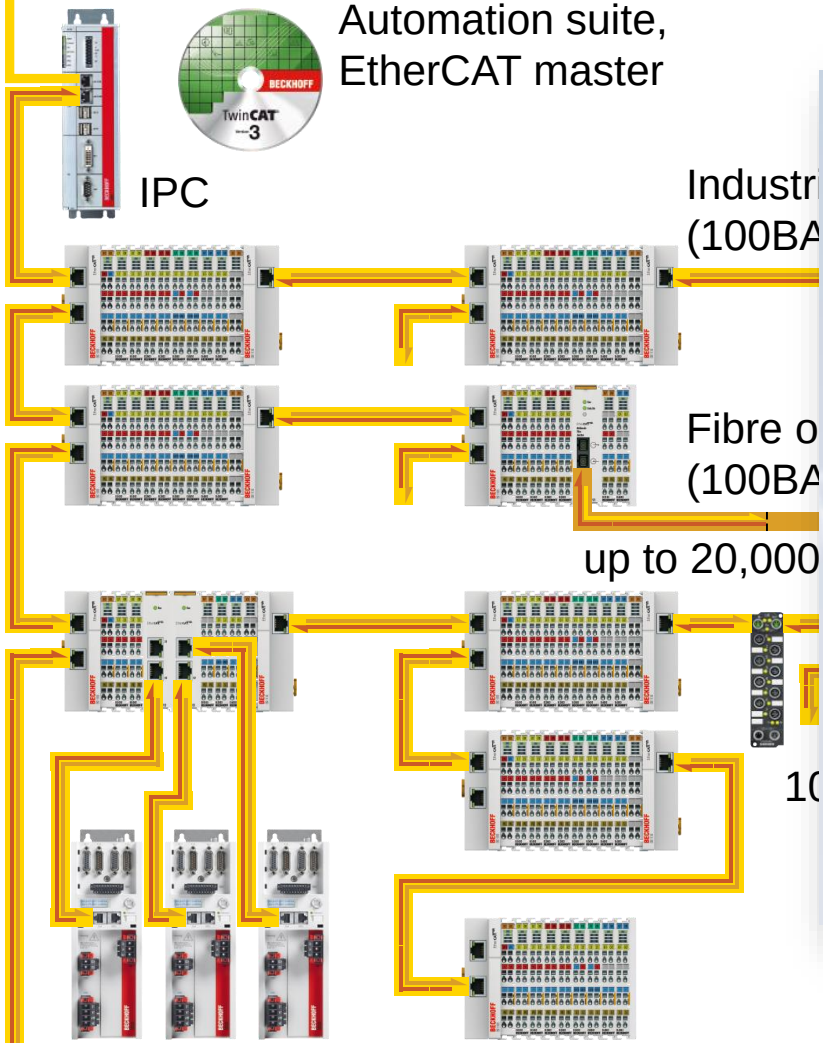

Integration of legacy fieldbus systems

BECKHOFF

- High bandwidth utilization allows integration of underlying fieldbus technologies into the EtherCAT process image
  - Fieldbus master or slave
- Migration path for machine builder
- Small Embedded PC solutions with maximum flexibility

Fieldbus integration

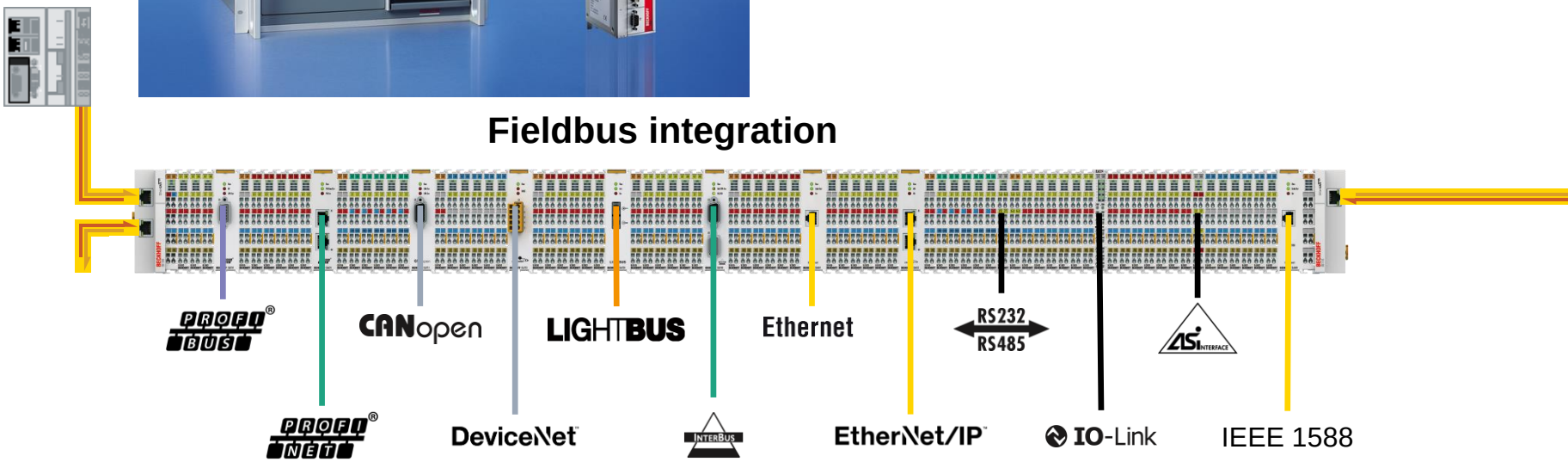

eXtreme Fast Control Technology for higher production efficiency

BECKHOFF

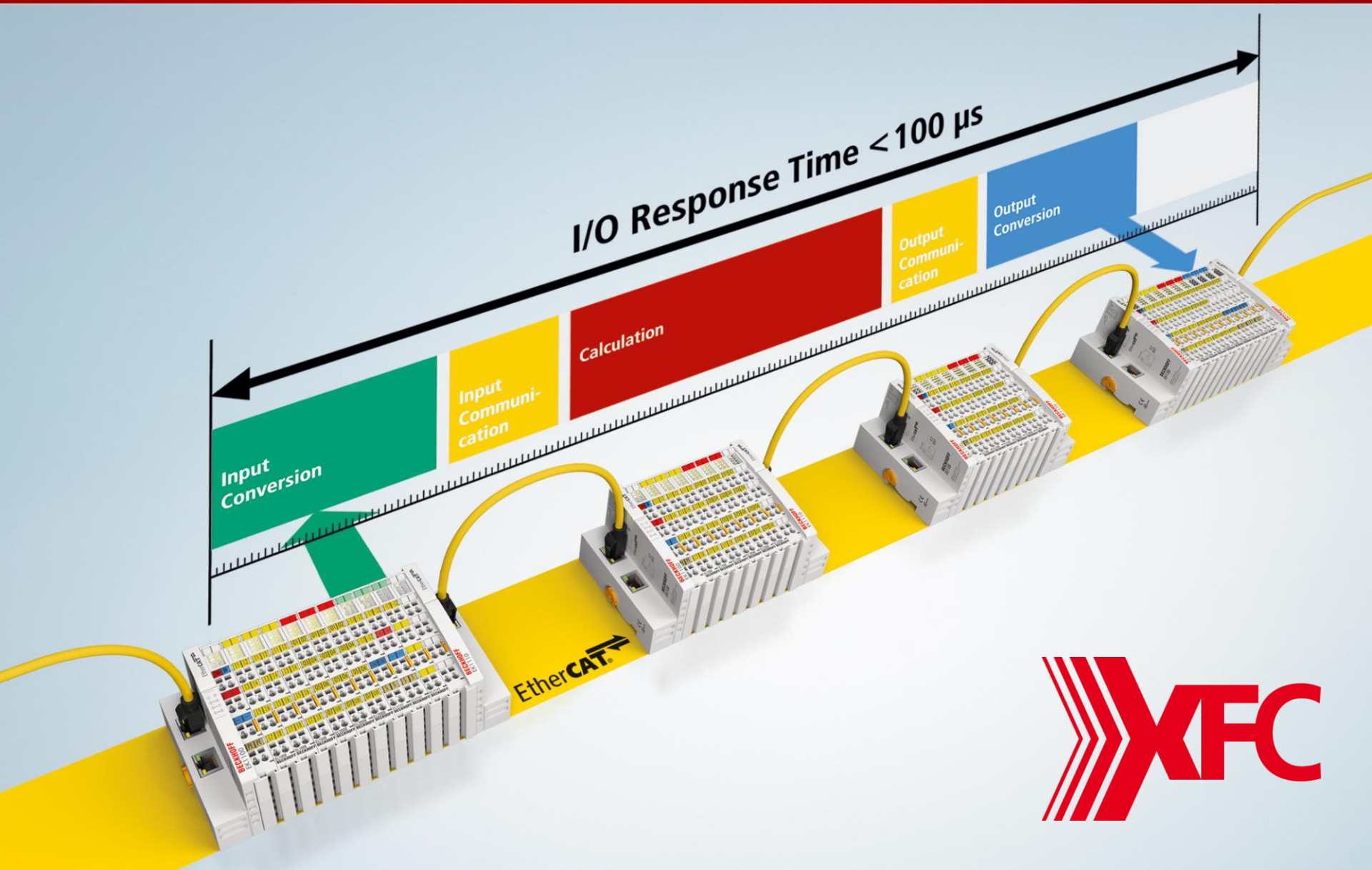

EtherCAT – Distributed clocks

BECKHOFF

- Time synchronization integrated in slave hardware EtherCAT Slave Controller
  - Shifting accuracy to the I/O level
- Distributed absolute system synchronization
  - CPU
  - I/O
  - drive devices
- Resolution: 10 ns
- Accuracy: < 100 ns

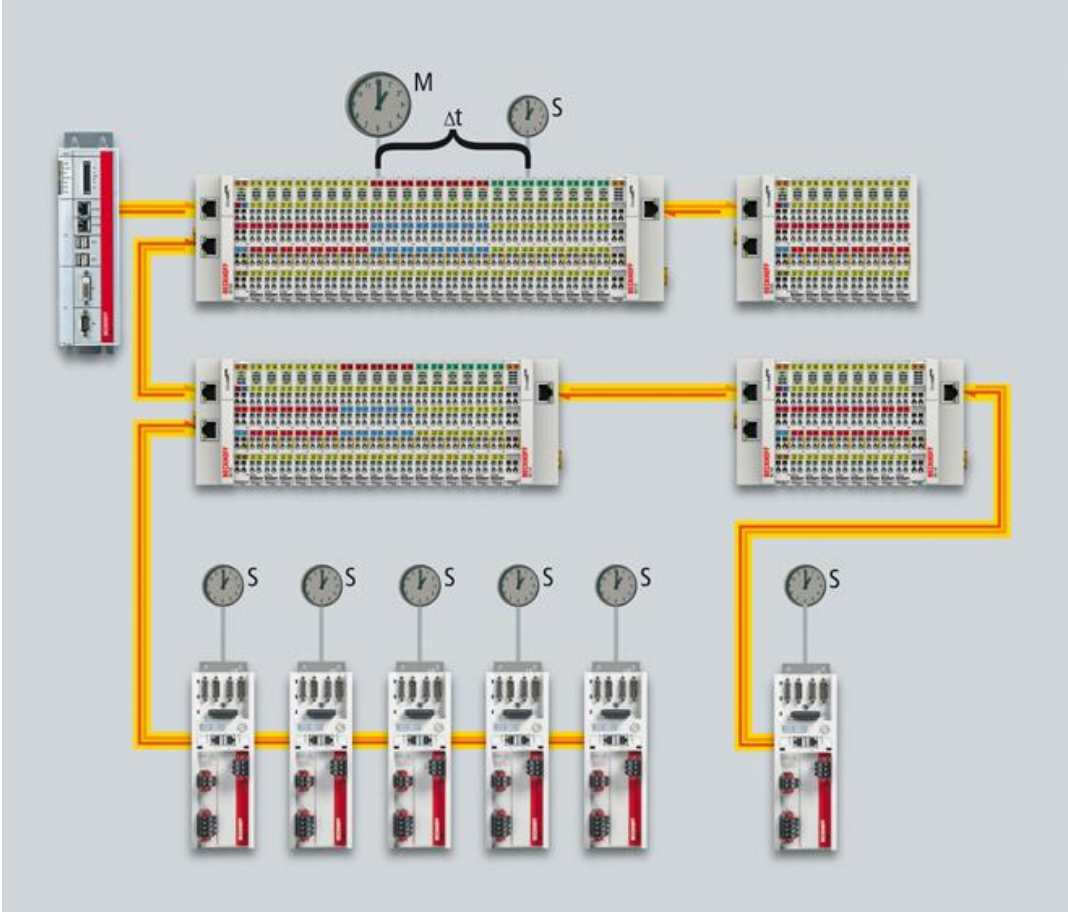

EtherCAT – Backbone for eXtreme Fast Control XFC

BECKHOFF

eXtreme Fast I/O

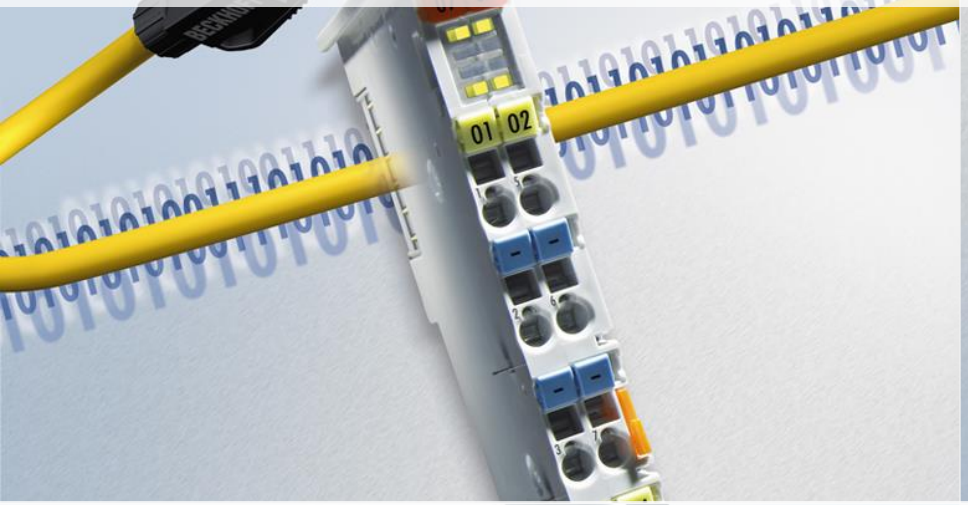

eXtreme Fast Communication

eXtreme Fast Controller (IPC)

eXtreme Fast Runtime

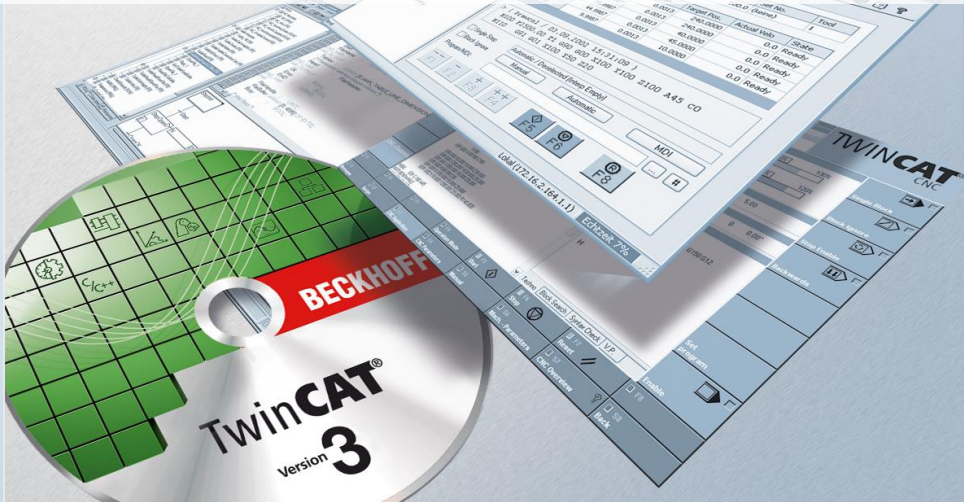

XFC in practice

BECKHOFF

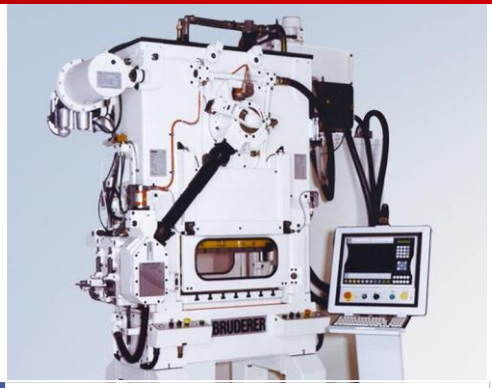

Digital cam

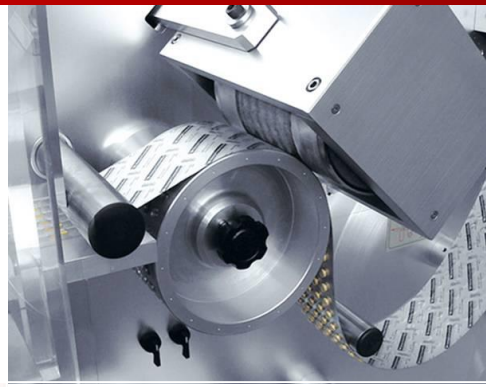

Printer position control

XFC

Glue application

Closed-loop control

Linear path control

Part tracking

EtherCAT – Backbone for Scientific Automation

BECKHOFF

Measurement technology

BECKHOFF

Condition Monitoring

BECKHOFF

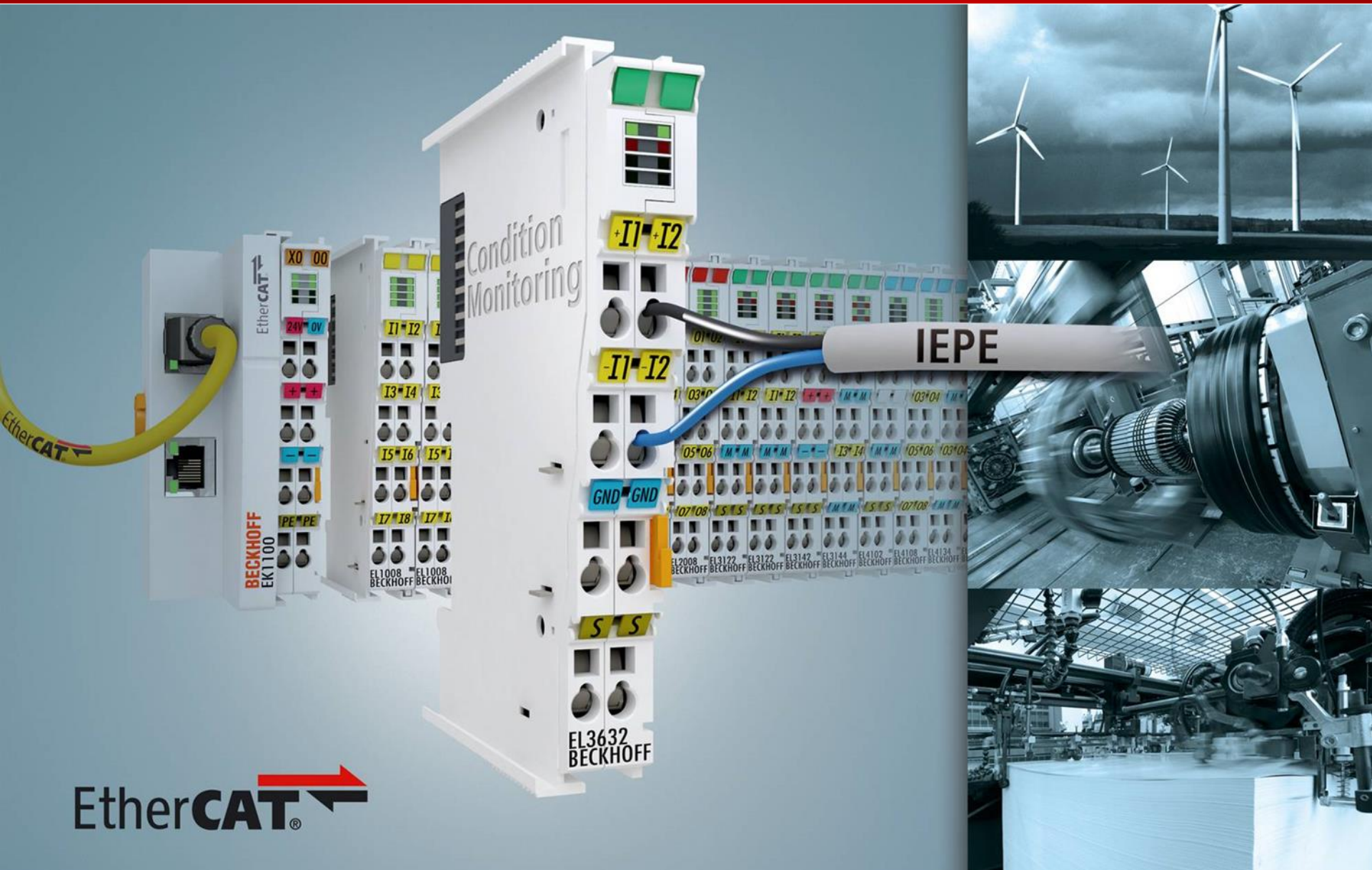

The Beckhoff servo terminal

BECKHOFF

Robotics

BECKHOFF

EtherCAT – The Automation Backbone
Made by Beckhoff

BECKHOFF