7 Future Experiments

As we discussed earlier, there are a number of theoretical and experimental reasons to believe that neutrinos do have mass and do oscillate. These arguments can be divided into four general categories:

(a) The need for dark matter from astronomical observations.

(b) The atmospheric neutrino anomaly.

(c) The LSND effect (discussed in Sec. 6.2).

(d) The solar neutrino deficit.

The regions in the oscillation parameter space suggested by these four general hints, and still compatible with the negative results of other experiments, are shown in Fig. 56.

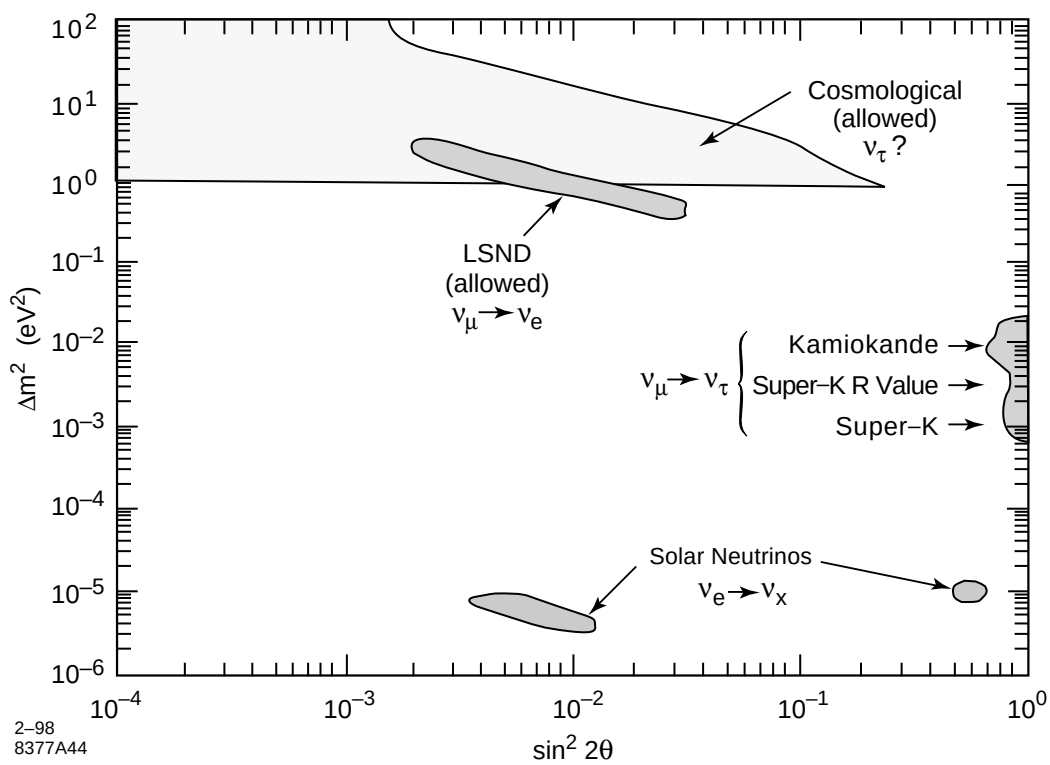

FIG. 56. Current evidence for possible neutrino oscillations. For each piece of experimental evidence (solar neutrinos, atmospheric neutrino anomaly, LSND effect) we display the suggested region in the parameter space obtained on the basis of a two-flavor fit and not excluded by other experiments. The pure vacuum oscillation possibility for solar neutrinos at low Δm^2 (~10^{-10} eV^2) is off the plot. The shaded region indicates roughly the neutrino mass (not Δm^2) region favored by the cosmological arguments. The higher values of $\sin^2 2\theta$ in this region are excluded by accelerator experiments.

The accelerator and reactor neutrino program planned around the world for the next decade is geared towards investigating and clarifying the above four general areas. In this final chapter, we shall briefly describe these efforts, grouped according to which of the above four issues they principally address. We first briefly outline the general thrust of activities in the accelerator and reactor neutrino area in each of the three major geographical areas of the world.

In Japan, the efforts are focussed on utilizing the Super-Kamiokande detector to search for accelerator neutrinos produced at KEK, some 230 km away, initially by the existing 12 GeV proton synchrotron, subsequently by the new 50 GeV proton accelerator of the Japanese Hadron Facility (JHF) currently in the planning stage. In addition, there are plans to convert the existing Kamiokande detector into a massive reactor neutrino detector.

In the U.S., the main thrust is centered around the NuMI project at Fermilab with both short baseline (COSMOS) and long baseline (MINOS) experiments. In addition, there is a BooNE proposal to investigate the LSND effect with the Fermilab 8 GeV Booster neutrino beam.

The situation in Western Europe is less clear. The current plan is to focus the neutrino program on a new beam pointing to the Gran Sasso Laboratory in Italy, about 730 km away. Both kinds of experiments, short baseline near the CERN site and long baseline at Gran Sasso, are being contemplated. At the present time, however, there is no definite commitment to build such a beam. There also has been some discussion about intermediate baseline experiments.

7.1 Experiments Addressing the Dark Matter Questions

7.1.1 COSMOS Experiment

The COSMOS experiment is part of the NuMI project at Fermilab, a new neutrino beam facility currently being designed together with its associated experiments. We shall first give a brief description of the NuMI beam. The source of primary protons will be the Main Injector accelerator, currently under construction at Fermilab and scheduled for completion in the middle of 1998. The energy of the extracted proton beam will be 120 GeV and it is anticipated that about 3.7×10^{20} protons on target will be available per year for the neutrino program. The FY98 budget includes initial funds for the engineering and design of the facility. The NuMI beam construction should start in the fall of 1998.

The neutrino beam is still in the final design stage[22] and the ideas presented here may not all be faithfully incorporated in the eventual beam. The 120 GeV proton

beam will strike a segmented graphite target about 1.8 interaction lengths long. The resulting hadron beam will be transported in vacuum for about 800 m, allowing π's and K's to decay producing neutrinos along this 800 m long path. The residual hadron beam (π's, K's, and the residual primary protons) will be disposed in a dump just downstream of the decay volume.

Both wide band and narrow band beam (WBB and NBB) capabilities are being designed and it is anticipated that they can be accommodated with a rather straightforward switchover from one configuration to another. It is desired to have a beam spill approximately 1 ms in length so as to avoid pileup in the detectors on the Fermilab site where the instantaneous neutrino rates are expected to be quite high.

In the initial program, two different experiments are envisaged to coexist and take data simultaneously, COSMOS and MINOS. Pointing the neutrinos at the Soudan site for the MINOS experiment requires that the parent hadron beam be directed downward at an angle of about 52 mr. The general orientation of the beam and location of the two sites are indicated in Fig. 57.

FIG. 57. The layout of the NuMI project.

The design criteria for the beam is not only high neutrino flux, required for both COSMOS and MINOS experiments, but also a flux that is as similar as possible at the two MINOS detector locations. The two criteria are somewhat contradictory, in-so-far as a high flux requires a long decay volume. Thus, the neutrinos present an effective line source to the detectors on the Fermilab site but a point source to the far detector. This difference results in somewhat different energy spectra at the two sites. The differences at the two locations have to be well understood and a monitoring system is planned to achieve this. The current design of the WBB configuration is based on three focusing horns. The ν_e event rate is estimated to be about 0.6% of the ν_μ rate.

COSMOS (COsmologically Significant Mass Oscillation Search),[98] a short baseline component of the NuMI project, is designed to explore Δm^2 space in the cosmologically relevant domain, i.e., $1 < \Delta m^2 < 100$ eV^2. For the $\sin^2 2\theta$ parameter, 2×10^{-5} should be achievable at the upper range of Δm^2 values. It is a multinational collaboration with the participating institutions coming from Japan, United States, Europe and Israel. (Note added in proof: The proponents have recently decided not to continue with this experiment.)

The experiment is similar in its general concept to CHORUS and uses an emulsion target for production of tau leptons. The excellent resolution of emulsions, about one micron in transverse dimension, will allow one to identify tau leptons by their characteristic decay kinks. A sophisticated downstream spectrometer measures the momenta of charged tracks, converts and measures γ rays, and provides particle identification. Scintillating fiber tracker, immediately downstream of the emulsion, will allow one to trace back the trajectories of the charged particles into the emulsion region and thus provide a relatively good localization of the ν_τ interaction and τ decay. The currently envisaged apparatus is shown in Fig. 58, though the design is still undergoing evolution.[99]

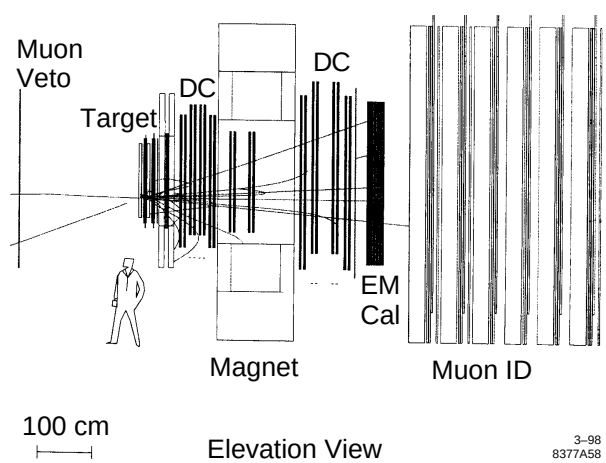

FIG. 58. Elevation view of the COSMOS hybrid emulsion spectrometer.

An important recent experimental development in this field has been the ability to do automatic scanning which significantly increases the volume of emulsion one can contemplate scanning in a finite time. The present estimated scanning capability of the collaboration is about 20,000 events/year. It is anticipated that this number will be soon raised to 100,000. A significant component of the Japanese contingent in the collaboration also participates in the DONUT (Fermilab E-872) and CHORUS at CERN experiments, where similar scanning techniques are being used and within which programs of significant development in the scanning technology have taken place.

Current estimates indicate that the experiment will be essentially background free. 1.5 background events are anticipated out of 8×10^6 ν_μ interactions. Because of the relatively low energy of the Main Injector, D_s production is strongly suppressed and there are no other significant sources of ν_τ production by the primary protons. Other potential sources of background like charm production, white star kinks, and decays of longer lived particles have been estimated by Monte Carlo calculations and shown to be below the one spurious event level.

Besides the presence of a kink, there are additional kinematical handles which help one to determine production and decay of a tau. Thus, for example, for the $\tau \rightarrow \pi\nu$ decay mode, in the rest frame of the τ, the pion momentum vector and missing momentum vector (due to the neutrino) have to be back to back. Similarly, the azimuthal angles of the tau and the primary hadronic jet have to be back to back. These constraints help significantly to reduce background.

The electromagnetic calorimeter is composed of about 3,500 blocks of lead glass. By detecting and measuring γ rays, other τ decay channels, like $\tau^- \rightarrow \rho^-\nu$, $\rho^- \rightarrow \pi^-\pi^o$, and $\pi^o \rightarrow 2\gamma$, can also be identified.

Figure 59 shows the expected sensitivity plot for COSMOS assuming three eight-month long runs with WBB with reasonable efficiency. The expected improvement over the current CERN experiments is about a factor of ten. There is also some sensitivity for $\nu_e \rightarrow \nu_\tau$ oscillations. It is hoped to have the experimental apparatus installed and checked out on a time scale such that the data taking can start in 2002.

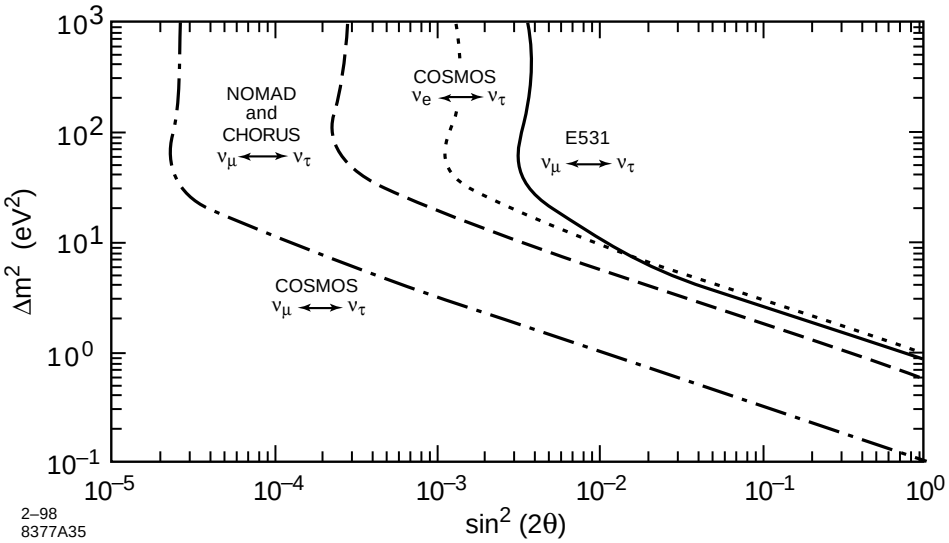

FIG. 59. The projected sensitivity for $\nu_\mu \to \nu_\tau$ and $\nu_\mu \to \nu_e$ oscillations of the COSMOS experiment and its comparison with the expected limits at the start of COSMOS run.

7.1.2 Outlook in Western Europe

About a year ago a decision was made by the CERN directorate not to continue the neutrino program in the West Area (where the current NOMAD and CHORUS experiments are situated). Instead, any new neutrino program would be based on a new neutrino beam, produced by protons from the SPS extracted in the same place where the transfer line to LHC would originate.[100] The hadron beam would be about 1000 m long and would point downward at about 5.8% so as to aim at the Gran Sasso Laboratory. A detector hall for a potential short baseline experiment could be constructed a few hundred meters downstream of the secondary hadron beam dump and would be at a depth of about 135 m. At the present time, it is not clear whether funds for such a beam line will be available. The decision is expected sometime within a year or so.

In parallel, there has been an extensive effort to design an experiment which could significantly extend the expected reach of the current CERN short baseline experiments. These efforts have resulted in a TOSCA proposal,[101] whose schematic layout is indicated in Fig. 60. The apparatus is composed of six relatively self-contained target modules located in the UA1 magnet, currently used by the NOMAD experiment. There is sufficient tracking capability within each module, as can be seen in Fig. 61, to measure directions and momenta of all tracks. Emulsions in each module are still used as the neutrino target but the modularization allows one to increase total emulsion mass without degrading track measuring capability. The calculated reach in $\sin^2 2\theta$ is 1.5×10^{-5} at large Δm^2, i.e., somewhat better than COSMOS, and $\Delta m^2 = 0.1\ eV^2$ for $\sin^2 2\theta = 1$.

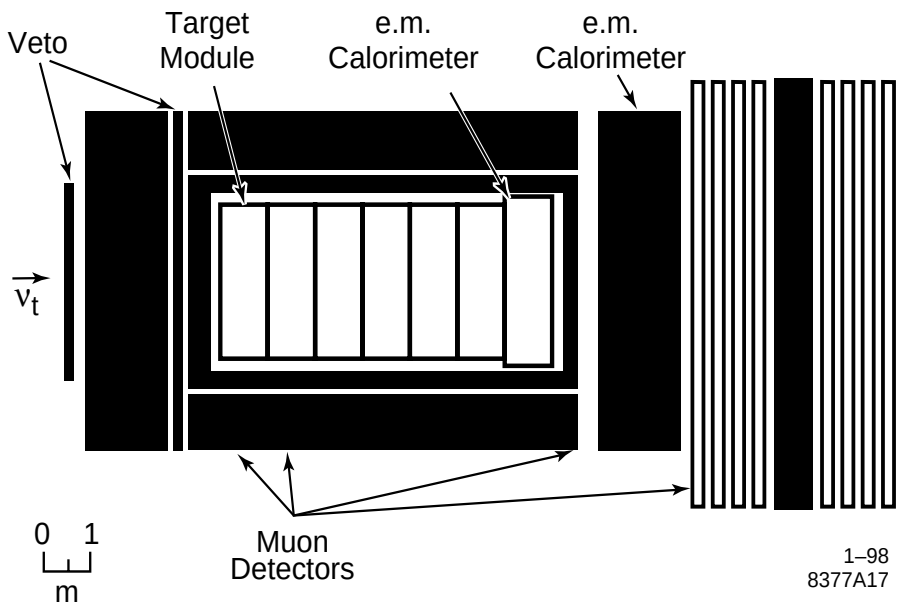

FIG. 60. Schematic layout of the proposed TOSCA experiment at CERN.

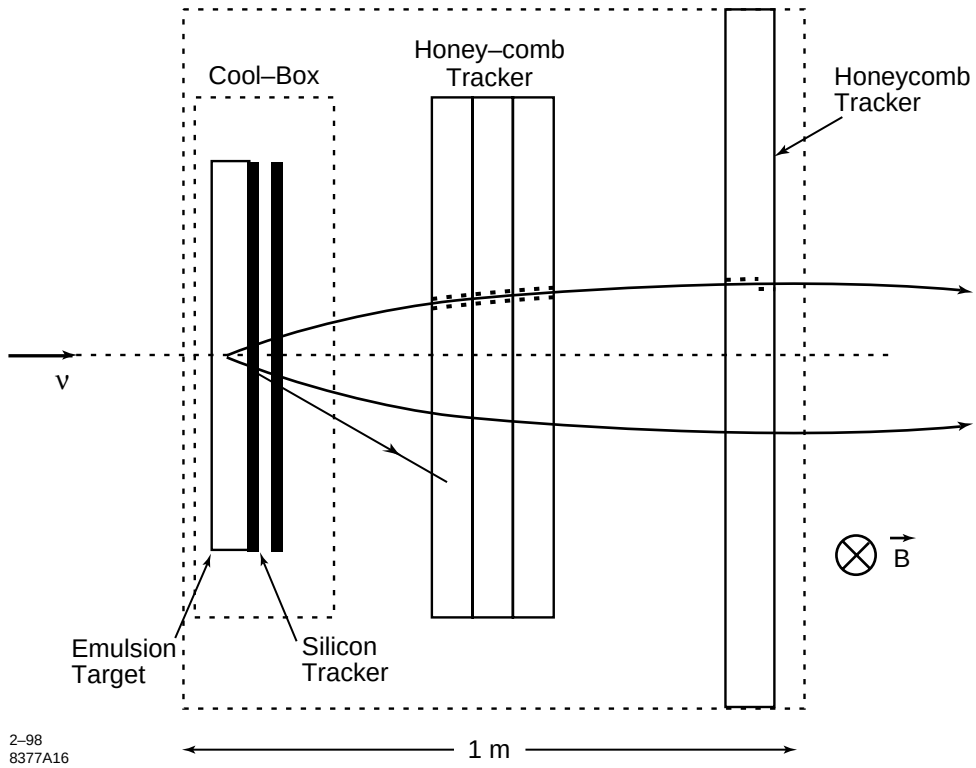

FIG. 61. Proposed design of each of the six tracking modules in the TOSCA experiment.

7.2 Experiments Addressing the Atmospheric Neutrino Anomaly

7.2.1 K2K Experiment

The first confrontation of the atmospheric neutrino anomaly with accelerator neutrinos should be within the framework of the K2K experiment in Japan, based on a neutrino beam from the 12 GeV proton synchrotron at KEK to the Super- Kamiokande detector, 250 km away.[102] The neutrino beam is currently under construction and data taking is scheduled to start early in 1999. The neutrino beam will be a relatively pure ν_μ beam with a 0.7% ν_e component with an average neutrino energy of 1.4 GeV. The expected spectrum at the Super-K site is shown in Fig. 62.

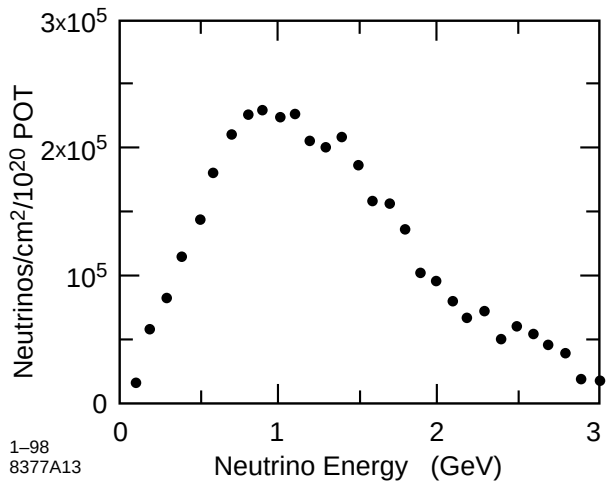

FIG. 62. Calculated neutrino spectrum at the Super-Kamiokande detector from the KEK 12 GeV proton accelerator.

Because the neutrino energy spectrum is below τ threshold, the K2K experiment can investigate only ν_μ disappearance and ν_e appearance. The beam uses a double magnetic horn system and the decay volume is 200 m long. Besides Super-K, there will be two additional detectors, both located on the KEK site: a 1 kt water Cherenkov detector for near/far comparison and a fine-grained detector whose goal is to measure precisely the neutrino flux. It consists of a main target part, composed of scintillator fiber planes interleaved with water "slabs" and followed by a downstream muon detector.

The aim of the experiment is to accumulate 10^{20} protons on target (p.o.t.), with the current synchrotron intensity of 3×10^{12} protons per pulse (ppp) and a 2 sec repetition rate; this will require two to three years of dedicated neutrino running. 10^{20} p.o.t. should give about 400 CC neutrino interactions in the 22 kt fiducial volume of Super-K if no oscillations are present. For oscillation parameters of $\Delta m^2 = 0.01$ eV^2 and $\sin^2 2\theta = 1.0$ only 148 CC ν_μ events would be observed. About 77 ν_e CC events should be observed for these parameters if the oscillation mode is $\nu_\mu \rightarrow \nu_e$.

The expected sensitivities for both $\nu_\mu \rightarrow \nu_x$ (disappearance) and $\nu_\mu \rightarrow \nu_e$ oscillations are shown in Fig. 63. As can be seen, most of the accessible $\nu_\mu \rightarrow \nu_e$ region is already excluded by the recent CHOOZ result.[89]

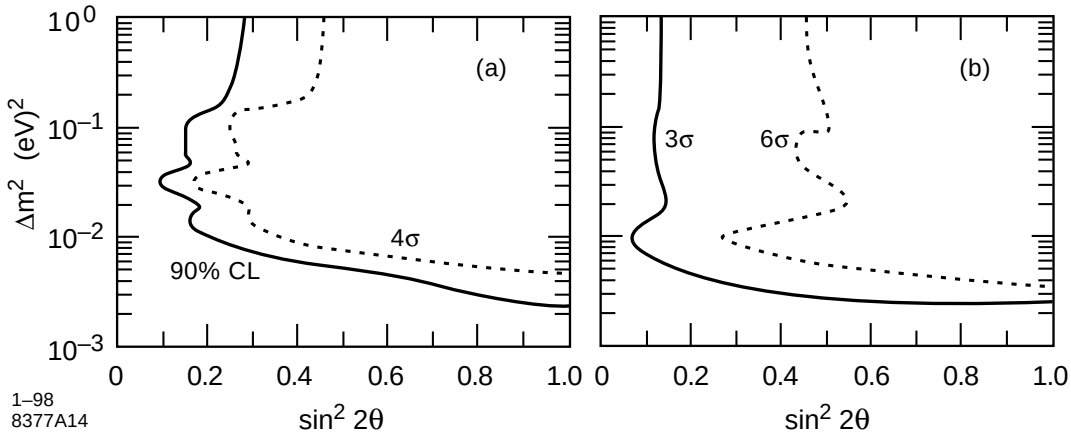

FIG. 63. The expected sensitivity for the K2K experiment for (a) $\nu_\mu \rightarrow \nu_x$ disappearance measurement and for (b) $\nu_\mu \rightarrow \nu_e$ oscillation..

7.2.2 JHF Program

A more ambitious, but also longer range, Japanese accelerator neutrino program is based on the proposed 50 GeV proton synchrotron within the framework of the Japanese Hadron Facility (JHF).[103] This accelerator is designed to deliver 2 x 10^{14} ppp with a repetition rate of 0.3 Hz. The hope is to have the project approved early in 1998 so that physics experiments could start in 2004.

The neutrino physics program at JHF would use the beam and the detectors from the K2K experiment. Thus, relatively little new construction will be necessary. The neutrino beam would have a significant fraction of neutrinos with energy above τ threshold, i.e., about 3.5 GeV. Studies have begun to see how τ production could be detected in Super-K.

A channel which looks promising is the quasi-elastic τ production followed by $\tau \rightarrow \mu\nu\bar{\nu}$ decay in a narrow band beam. The decay muon and the recoil proton can be identified relatively cleanly by the water Cherenkov technique and the subsequent kinematical analysis can reject most of the ν_μ CC background. These studies indicate that 15-20 τ events can be identified with no background for 10^{21} protons on target, if $\Delta m^2 = 0.025$ eV^2 and $\sin^2 2\theta = 1.0$. A 90% C.L. contour for the τ appearance for 10^{21} p.o.t. is shown in Fig. 64.

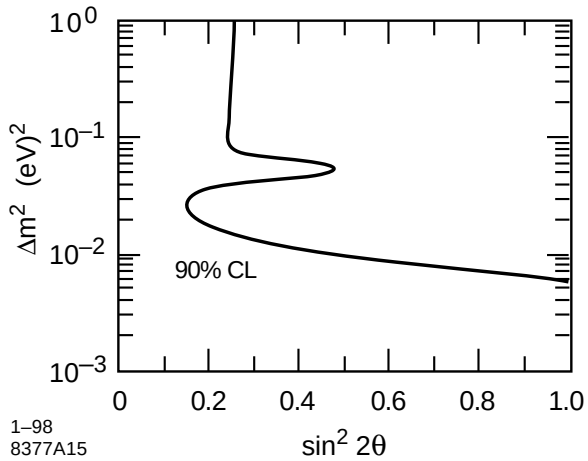

FIG. 64. A 90% C.L. contour on ν_τ appearance in the K2K experiment using the new JHF synchrotron and Super-Kamiokande as the detector.

7.2.3 MINOS Experiment

MINOS (Main Injector Neutrino Oscillation Search)[104] is a long baseline neutrino oscillation experiment designed to explore a large area in the oscillation parameter space, both for the $\nu_\mu \rightarrow \nu_e$ and the $\nu_\mu \rightarrow \nu_\tau$ oscillations. More specifically, for ν_τ oscillation levels close to 0.01 for $\sin^2 2\theta$ should be attainable, and for ν_e close to 2×10^{-3}, and sensitivity should extend to $\Delta m^2 = 0.001$ eV^2 for large mixing angles. In addition, if oscillations are observed, the experiment will be capable of identifying the specific oscillation mode; the oscillation parameters should be measurable with good precision, especially if Δm^2 and $\sin^2 2\theta$ are relatively large. For the region of parameter space suggested by the Kamiokande experiment, the experiment will be able to identify several exclusive τ decay modes on a statistical basis.

The basic experimental method relies on comparing the rates and characteristics of neutrino interactions in two detectors at two widely separated locations, under experimental conditions that are as identical as feasible. Thus the differences in the beam characteristics at the two locations have to be minimized. Furthermore, the two detectors will be made as identical as possible in the important characteristics. Several different experimental measurements will be made to provide redundancy and a check of possible systematics. Among the most important of these measurements are

comparison of rates, comparison of the neutral current/charged current ratio and comparison of the total energy spectra of charged current events and of neutral current events.

The far detector will be located in the Soudan mine in Minnesota, approximately 800 m below the ground level. In the past, the Soudan mine was an important high grade iron mine but the mining now has been discontinued. Currently, the Soudan site is maintained as a state historical park, which results in a high level of safety and availability of certain infrastructure necessary for the running of the experiment. At the present time there is located in the mine an operating fine-grained detector Soudan 2, approximately 1 kt in mass.[105] It was originally designed to search for proton decay and is currently used for that investigation as well as for the study of atmospheric neutrinos. This detector will also be used as part of the MINOS experiment but its small mass would not allow achievement of the sensitivity desired by MINOS. Accordingly, it is planned to construct a new, larger detector to be located in another neighboring cavern to be excavated during the period 1998-2000. It would be of comparable size (about 80 x 14 x 14 m) as the existing cavern but would point towards Fermilab. The proposed layout of the whole Soudan MINOS experimental area is shown in Fig. 65.

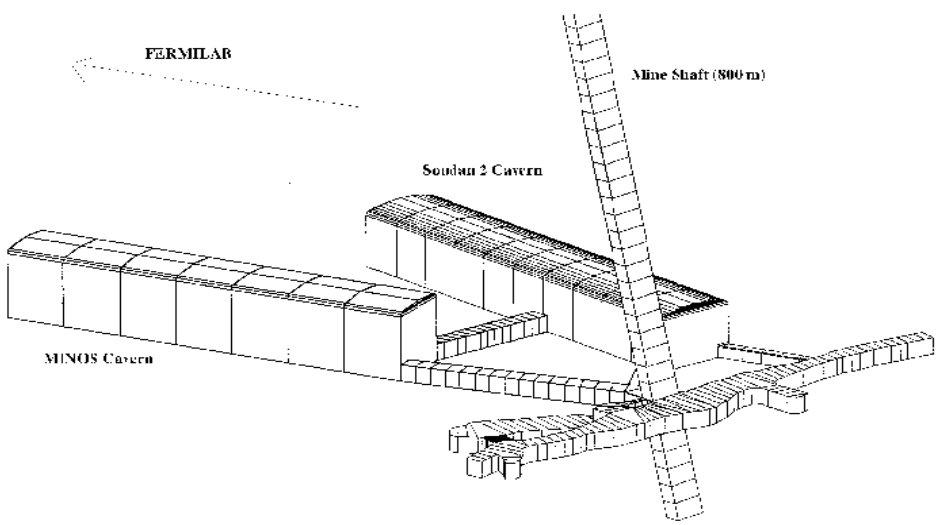

FIG. 65. The layout of the proposed Soudan MINOS experimental area together with the existing cavern housing the Soudan 2 detector.

The new MINOS far detector will be based on magnetized iron octagons, 8 m in diameter, 2.5 cm thick, with a toroidal field, and a total mass of about 8 kt.[106] The average B field will be about 1.5 T. A schematic of this detector is shown in Fig. 66. Active detector elements consisting of planes of solid scintillator strips, with wavelength shifting fiber imbedded in each strip for the readout, will be placed between the steel plates. The dimensions of the scintillator strips would be up to 8 m in length, 4 cm in transverse dimension, and 1 cm thick. A schematic of the proposed scintillator module, showing the routing of the optical signals from the scintillator to photomultiplier is illustrated in Fig. 67.

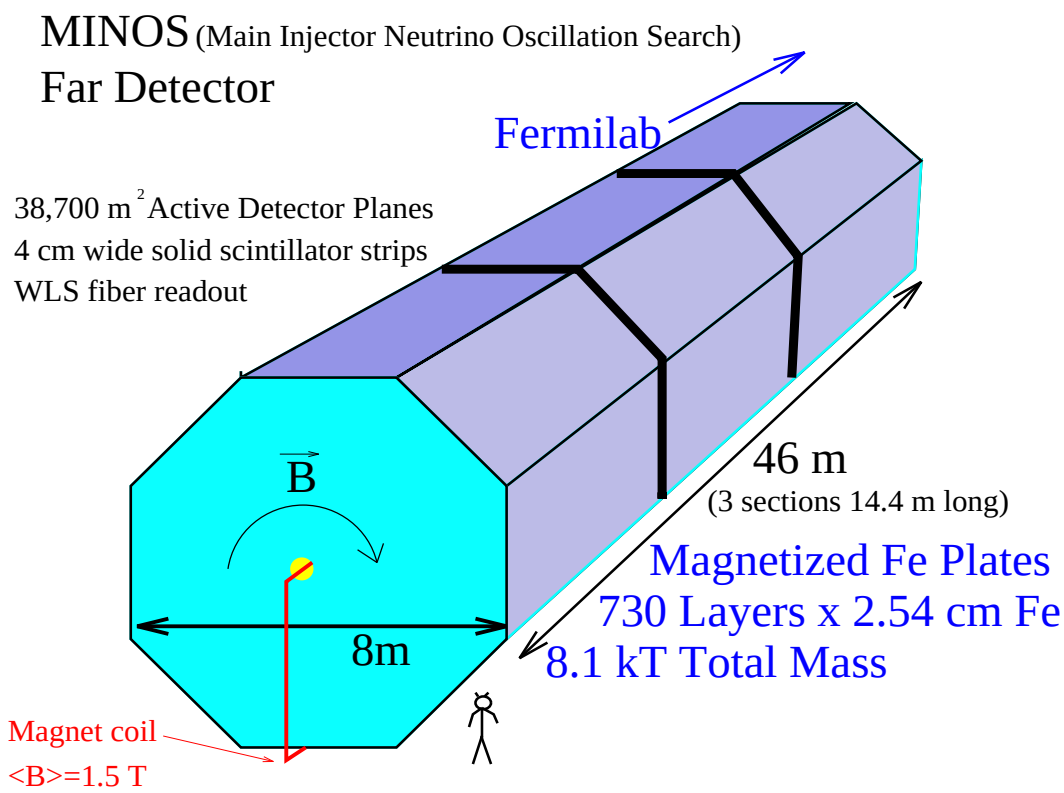

FIG. 66. Schematic drawing of the proposed MINOS detector.

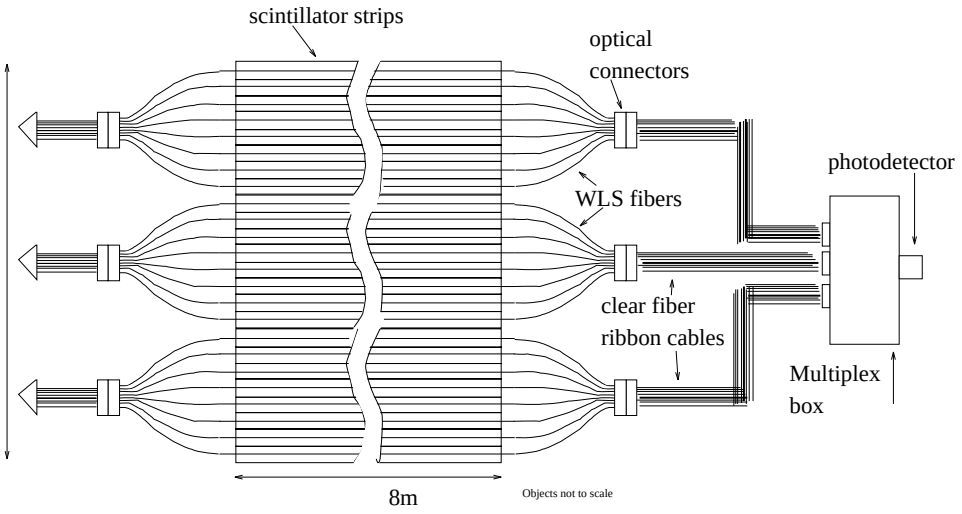

FIG. 67. Sketch of a proposed scintillator module for the MINOS detector. The system is left-right symmetric; the routing on the left side was omitted in the sketch for simplicity.

The near detector, on Fermilab site, will be as identical as possible to the far detector, except for the size. The location of the near detector will be about 500 m downstream of the end of the decay volume. The location is a compromise between the cost, which increases as one moves further downstream, and the desire to be as far downstream as possible so as to minimize the spectrum differences in the neutrino flux. It is planned to use only the central part of the near detector for comparison with the far detector for different physics measurements because the energy spectrum of the ν flux in that region is most similar to the spectrum at the far detector.

As mentioned earlier, the Soudan 2 detector will be operational during MINOS data taking and should provide complementary information. Its relatively low mass, and hence poorer statistics, will be compensated somewhat by its much finer granularity. That detector should be ready to take data immediately when the first ν flux will become available. In addition, the MINOS Collaboration is investigating the possibility of having an emulsion-based detector, capable of detecting τ's on an individual basis, upstream of the main detector.

The 90% C.L. limits that can be set on both $\nu_\mu \to \nu_e$ and $\nu_\mu \to \nu_\tau$ oscillations are illustrated in Fig. 68, assuming a two year long exposure of a 8 kt detector in the neutrino wide band beam discussed above in section 7.1.1. The several curves

displayed in Fig. 68 correspond to different experimental measurements. The most sensitive test for ν_τ oscillations is the NC/CC ratio (curve A). Even though it is not as powerful statistically as the total rate measurement, it is relatively immune to differences in the ν energy spectra at the two locations and to the total relative normalization of the fluxes. The relative rate measurements of the ν_μ CC process (curve B) at the two detectors are the most powerful statistically; however, it is not clear at this time whether the systematic error on these measurements can be brought down below 2%.

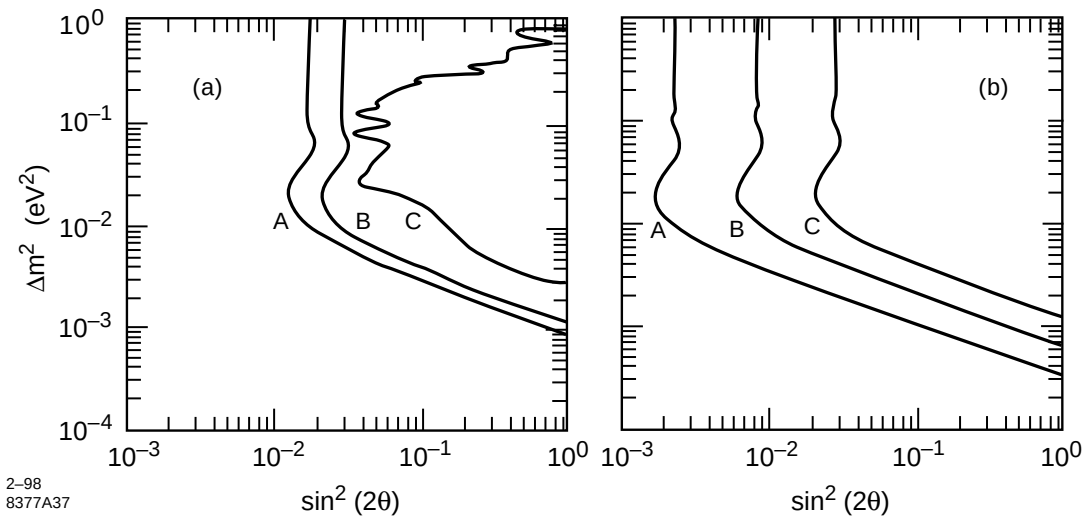

FIG. 68. Projected MINOS sensitivity to $\nu_\mu - \nu_\tau$ (a) and $\nu_\mu \rightarrow \nu_e$ (b) oscillations. Different curves correspond to different independent measurements.

Study of the CC total energy spectra (curve C) can provide an oscillation-mode-independent determination of the oscillation parameters. Good total energy resolution helps to extend the reach here, especially for large values of Δm^2. Optimization of this measurement was one argument for preferring scintillator over gas detectors. For low values of Δm^2 (around 10^{-3}eV^2) variation in the relative energy scale could be an important source of systematic error and a limitation on this technique.

It is hoped that the construction of the far detector can start sometime in 1999. If these optimistic projections pan out, the experiment could commence taking data

sometime in the year 2002 with the Soudan 2 detector and 1/3 of the MINOS far detector. The complete 8 kt detector could be finished about two years later. At the present time the MINOS collaboration consists of almost 200 individuals, representing 23 institutions from four countries: China, Great Britain, Russia, and the United States.

7.2.4 Possibilities in Western Europe

As mentioned above, the long baseline neutrino program in Western Europe, if it materializes, will be based on a new beam and detectors in the Gran Sasso Laboratory. There has been a significant amount of effort to date in the European community to design detectors optimized for study of potential neutrino oscillations with oscillation parameters suggested by the Kamiokande and Super-K atmospheric neutrino results. We shall describe these efforts below, albeit very briefly, since the situation is still quite fluid.

(a) ICARUS. The first 600 ton module of this detector is being built and is scheduled for installation in Gran Sasso in 1999. ICARUS is a large liquid argon chamber relying on the TPC principle to collect space points.[107] Its advantages are continuous sensitivity, capability of self-triggering, ability to provide three-dimensional images of ionizing tracks, and dE/dx measurements permitting some particle identification. Independent of the long baseline developments, ICARUS will be a powerful tool for studies of solar neutrinos, for proton decay search and for detection of future supernova neutrinos.

The ICARUS development program has now been in existence for over a decade. A 40 l prototype has been located now in the CERN neutrino beam for some time and a larger, three-ton prototype has been in operation at CERN since May 1991 and has provided a great deal of information about operational issues.[52]

The eventual plans call for construction of at least two additional ICARUS modules, giving a total detector mass of close to 1.8 kt. A schematic of the 600 ton module is shown in Fig. 69.

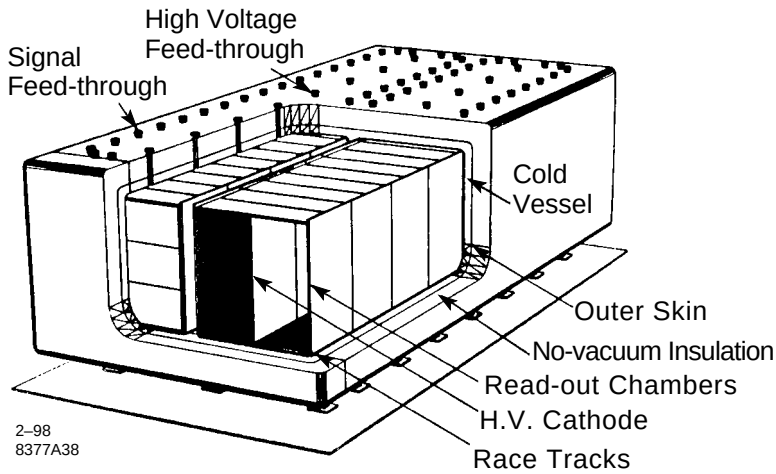

FIG. 69. Schematic drawing of the 600 ton ICARUS detector currently under construction.

(b) Neutrino Oscillation Experiment (NOE) is a more conventional detector consisting of non-magnetic target modules followed by a muon spectrometer downstream.[108] The target modules are composed of 13 cm x 13 cm x 8 m long submodules, made of scintillating fibers imbedded in taconite iron ore. They are viewed at each end by a 1.5" photomultiplier tube. The total mass of the proposed NOE detector is about 6 kt. The cross section of the target module is shown in Fig. 70.

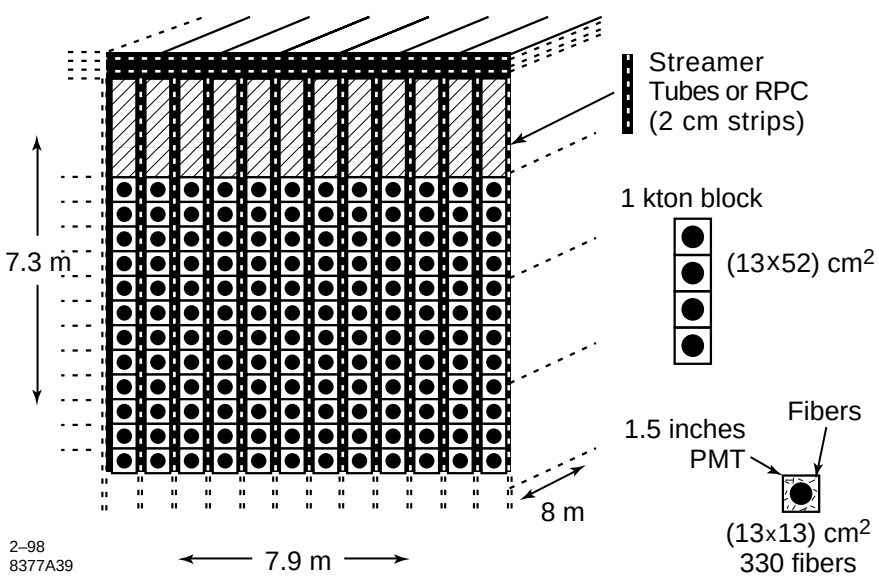

FIG. 70. Cross section of the proposed NOE detector. The detector would consist of four 8 m long target modules (illustrated above) followed by a muon spectrometer.

(c) RICH detector is a 27 kt water Cherenkov detector with focusing.[66] It is proposed as five equivalent sections, each one 20 m long and 18.6 m in diameter with a focusing mirror of 20 m curvature at the end. The focused light is detected by a planar array of hybrid photo detectors (HPD) located 11.5 m downstream of the mirror center of curvature. 20% coverage of the area with HPD's is proposed. A drawing of the proposed detector was shown earlier in Fig. 23.

(d) OPERA. This detector would be based on emulsions.[109] A module would consist of a τ detection region, composed of two emulsion sheets with a very low density material in between. Each emulsion sheet would have 50 μm layers on both sides of a 100 μm plastic sheet. Thus, two high quality track segments could be measured on each side of the low density material, allowing detection of the τ decay kink in the low density volume. The principle of this OPERA concept is illustrated in Fig. 71.

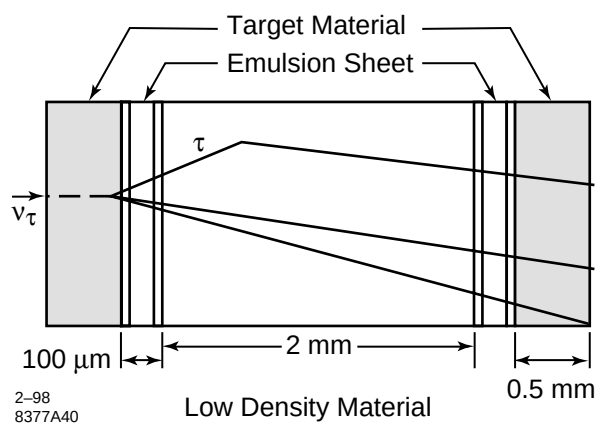

FIG. 71. Illustration of the OPERA concept for detection of tau's in a neutrino beam.

All of these detector schemes claim a comparable (within a factor of two) sensitivity to potential neutrino oscillations: about 2×10^{-3} eV^2 in Δm^2 reach and 2×10^{-2} in $\sin^2 2\theta$ reach in one to two years running.

7.3 LSND Effect

We have already discussed, in a previous chapter, the ongoing KARMEN experiment which should soon be able to confront directly the LSND oscillation result. In this section we shall focus on other efforts around the world, which, starting from scratch, aim to verify and study the LSND anomaly.

7.3.1 BooNE Proposal at Fermilab

This effort aims to study the LSND effect at neutrino energies a factor of ten higher than available at Los Alamos.[110] The proposal is to use the 8 GeV proton beam from the Fermilab booster to generate a relatively pure ν_μ beam in the energy range of 0.5 - 1.5 GeV. The relatively low K/π production ratio at these energies means that the ν_e contamination in the neutrino beam will be quite low.

The main thrust of this proposed experiment would be to look for the appearance of the ν_e signal. The proposed detector is quite similar to the LSND detector. Its proposed location is about 1 km downstream of the end of the decay pipe. The total proposed mass for the detector is 600 tons (400 tons fiducial volume); there is an inner (detector) tank volume, surrounded by an external veto shield. The inner volume is filled with mineral oil, with a possible low concentration of scintillator fluors. The outer volume would be filled with conventional, mineral oil based liquid scintillator. The plan is to use 1200 phototubes, which would provide a 10% coverage of the total detector inner area.

The particle identification would be done by combining all the available information. Thus, most of the ν_μ CC events could be identified by the presence of a muon in the outer (veto) detector region. The ratio of late and early hits (i.e., scintillation and Cherenkov light) would allow one to separate electrons from heavier particles. Finally, the opening angle between the two γ's from π^o decay would allow one some discrimination between e's and π^o's.

The proponents claim to be able to reach sensitivity of 6 x 10^{-4} for the $\nu_\mu \rightarrow \nu_e$ oscillations at high Δm^2. In the most interesting LSND-suggested region ($\Delta m^2 \sim 1$ eV^2) they claim to have sensitivity roughly a factor of five better then LSND.

7.3.2 Possibilities at CERN

A couple of years ago there was a significant interest in Europe to explore the possibility of using the West Area neutrino beam together with a detector in the Jura mountains to study possible neutrino oscillations in the intermediate L/E range (L/E of the order of unity).[111] Because of the mountainous topography in the region, several adequate locations appeared available. There were discussions about both ICARUS and OPERA detectors being located there. The recent decision by CERN to shift their neutrino effort away from the West Area puts an end (at least temporarily) to these possibilities.

There is some discussion currently about using the old neutrino beam from the CERN PS for an oscillation experiment probing this LSND-motivated region. Whether such an experiment has a chance of coming to fruition is unclear at the present time.[60]

7.4 Solar Neutrino Anomaly — KamLand

The solar neutrino anomaly, if interpreted as due to neutrino oscillations, is quite difficult to test in terrestial accelerator or reactor experiments because of the very large required value of L/E, (about 10^5) due to small Δm^2. The limitations due to the size of the earth (diameter of about 12,000 km) dictate that such an experiment would have to use neutrinos in the MeV range, i.e., reactor neutrinos. Because of the large L/E and small size of the neutrino cross section in the few MeV range, the detector would have to be quite large. Thus, the issue of backgrounds can potentially be very significant.

There is an ambitious Japanese effort, named KamLand, which may develop into a U.S.-Japan Collaboration, to overcome all of these difficulties with a large, 1 kton liquid scintillator detector, to be installed in the underground cavity where the Kamiokande detector was located.[111] A schematic cross section of such a detector is shown in Fig. 72. This detector would look for interactions of $\bar{\nu}_e$'s produced at several Japanese reactors around the site, typically some 150-250 km away. Since Japanese reactors undergo periodic maintenance, in the fall and spring of each year, there would be a periodic modulation of the $\bar{\nu}_e$ interaction rate from the reactors which would allow one to measure the backgrounds.

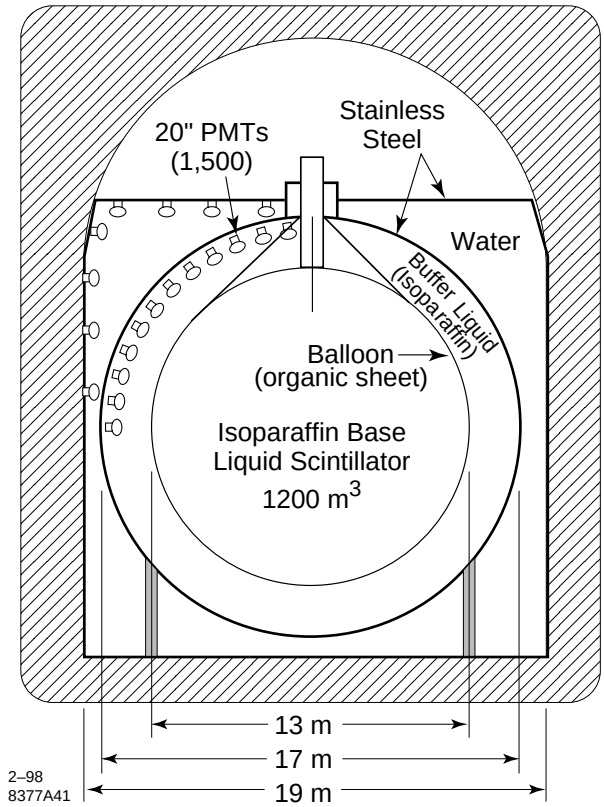

FIG. 72. Schematic drawing of the cross section of the KamLand detector.

The estimated reactor-associated neutrino signal in KamLand would be about 2 events/day, assuming no oscillations. The expected sensitivity for three years of running is $\Delta m^2 > 7 \times 10^{-6}\ eV^2$ for large $\sin^2 2\theta$ and $\sin^2 2\theta > 0.2$ for large Δm^2. According to stated plans, the data taking could begin in 2001.