EXPERIMENTAL EVALUATION OF LASER TRACKER TARGET HOLDERS STABILITY

Rodrigo Junqueira Leão

Metrology & Alignment / Mechanical Design Group

Brazilian Syncrotron Radiation Laboratory

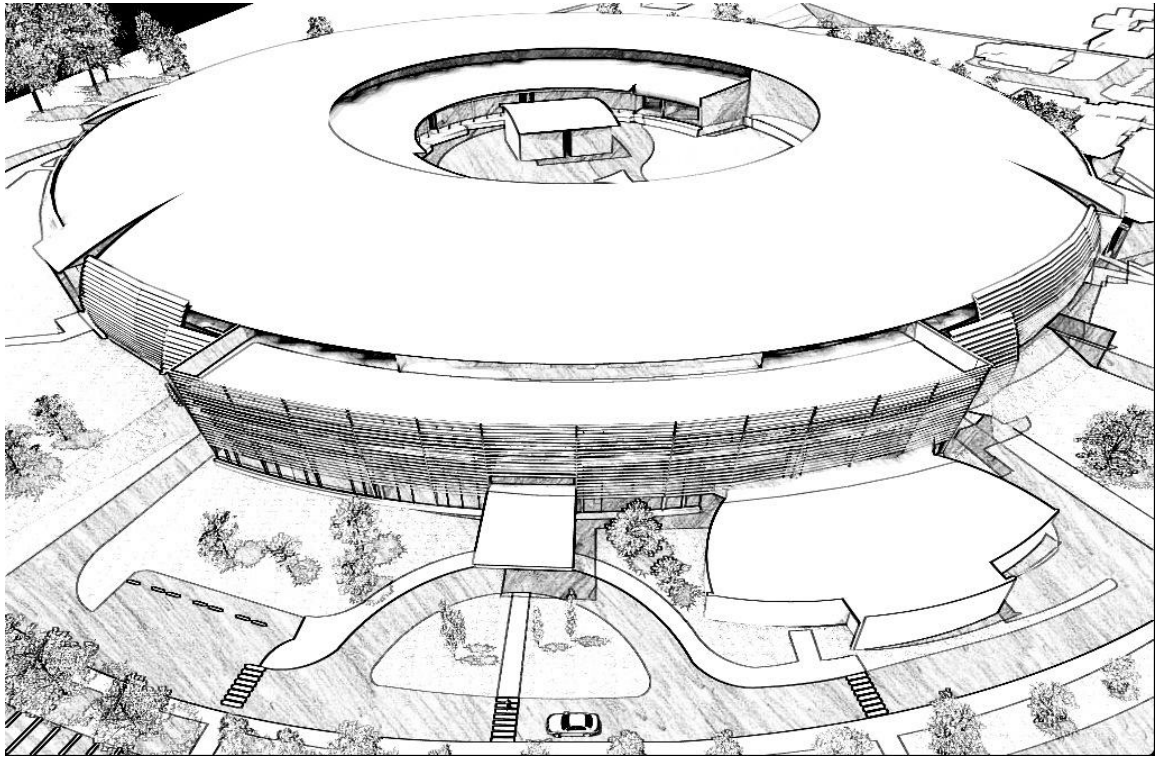

Motivation

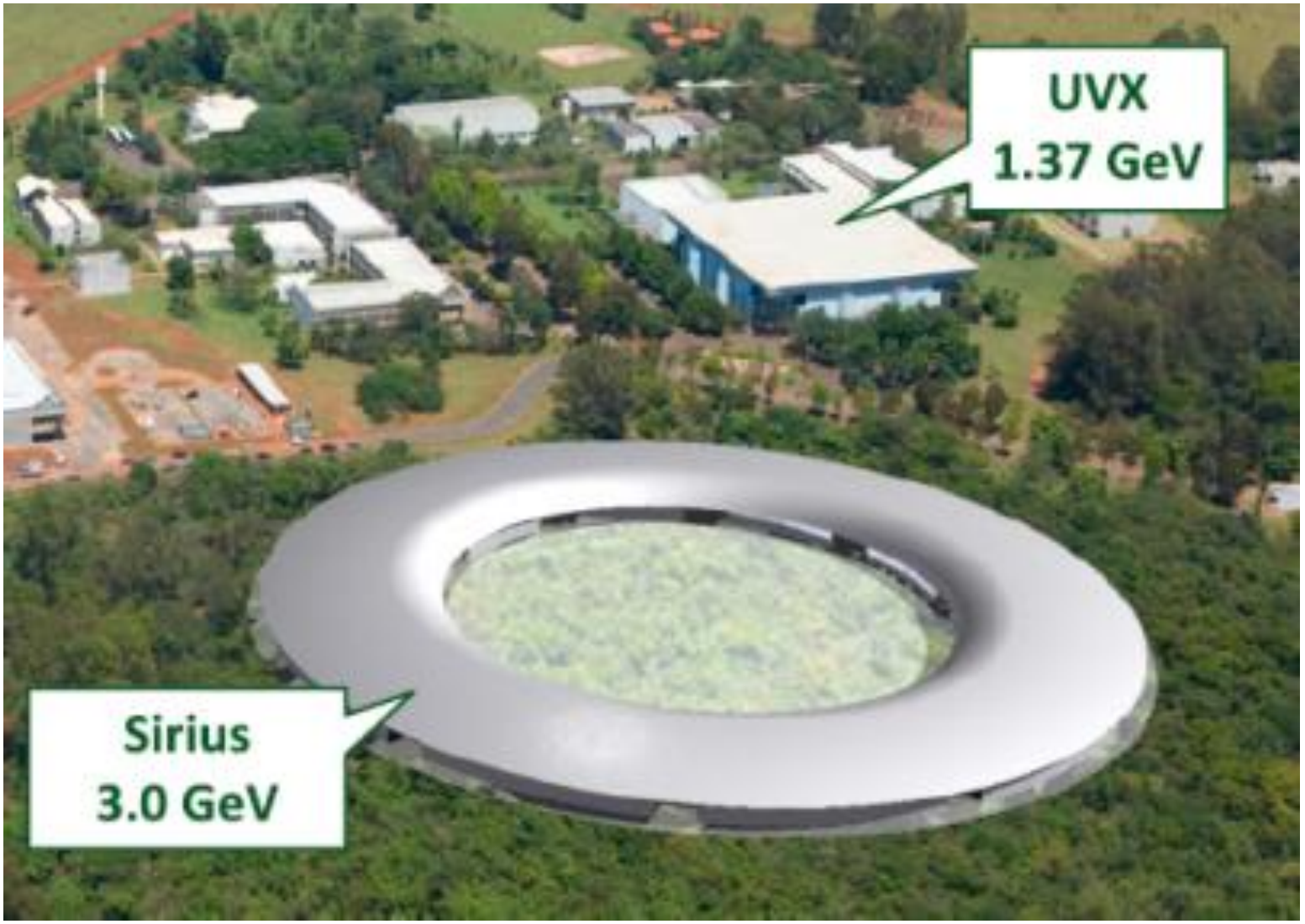

Motivation

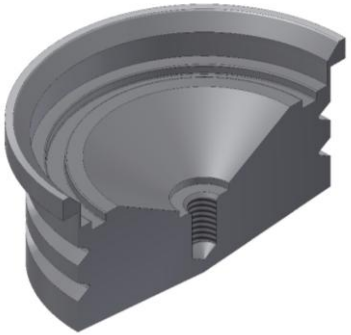

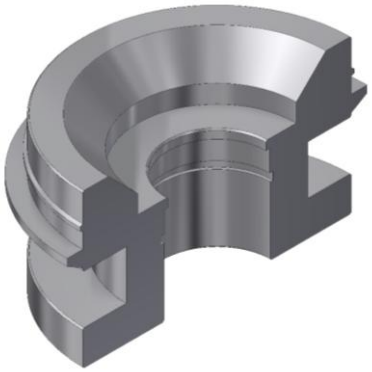

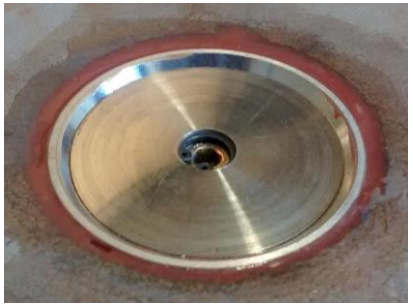

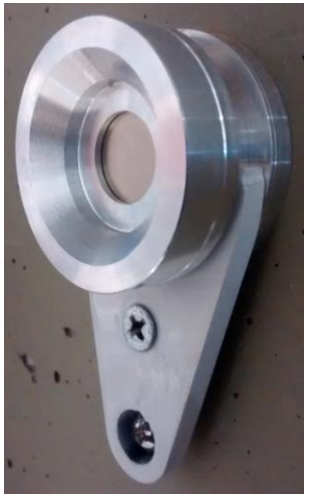

Walls

Floor

Objectives

Aluminum cone

Three stainless steel spheres

Segmented aluminum cone

Eletrolitical nickel cone

Stainless steel cone

Chemical nickel cone

Materials and Methods

- Use of a Coordinate Measuring Machine – CMM in CNC mode;
- Location of the SMR with 16 hits;
- Temperature compensation disabled;
- Temperature variation smaller than 0.2 ºC;
- Location of the Target Holders measuring a plane and a circle;
- Location of the origin before each repetition;
- Execution of the experiment in a completely randomized manner;
- 30 observations of each model;
- Use of gloves to minimize thermal gradients between operator and apparatus;
- Screw fixation of the alignment support part and glue to avoid target holders displacement;
- Thermal stabilization of the tested models for at least 24 hours;
- Use of the same SMR in the same position during all measurements, to avoid the effect of sphericity errors;
- Cleaning of the contact region to remove possible deposited dust.

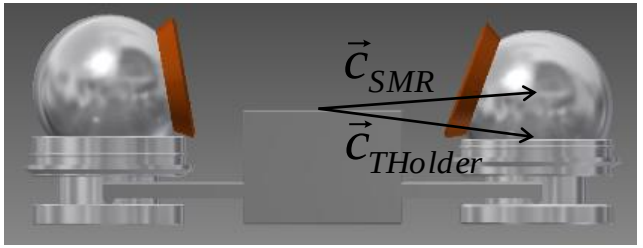

$$\vec{\mathrm{p}} = \vec{c}_{SMR} - \vec{c}_{THolder}$$

$$e_s = \sqrt[3]{\left|x_p - \overline{x_p}\right| \cdot \left|y_p - \overline{y_p}\right| \cdot \left|z_p - \overline{z_p}\right|}$$

Materials and Methods

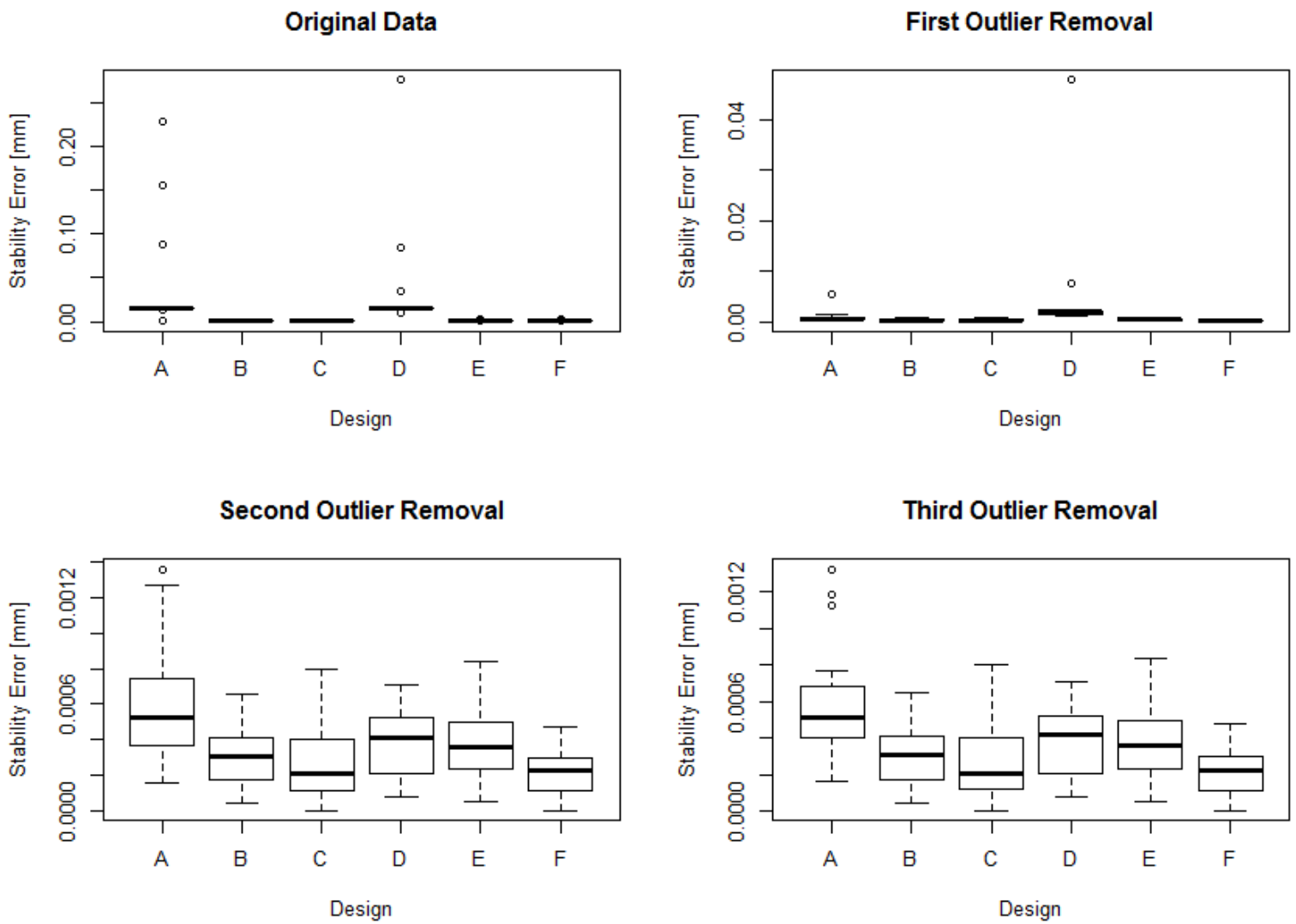

Materials and Methods

Qualitative result:

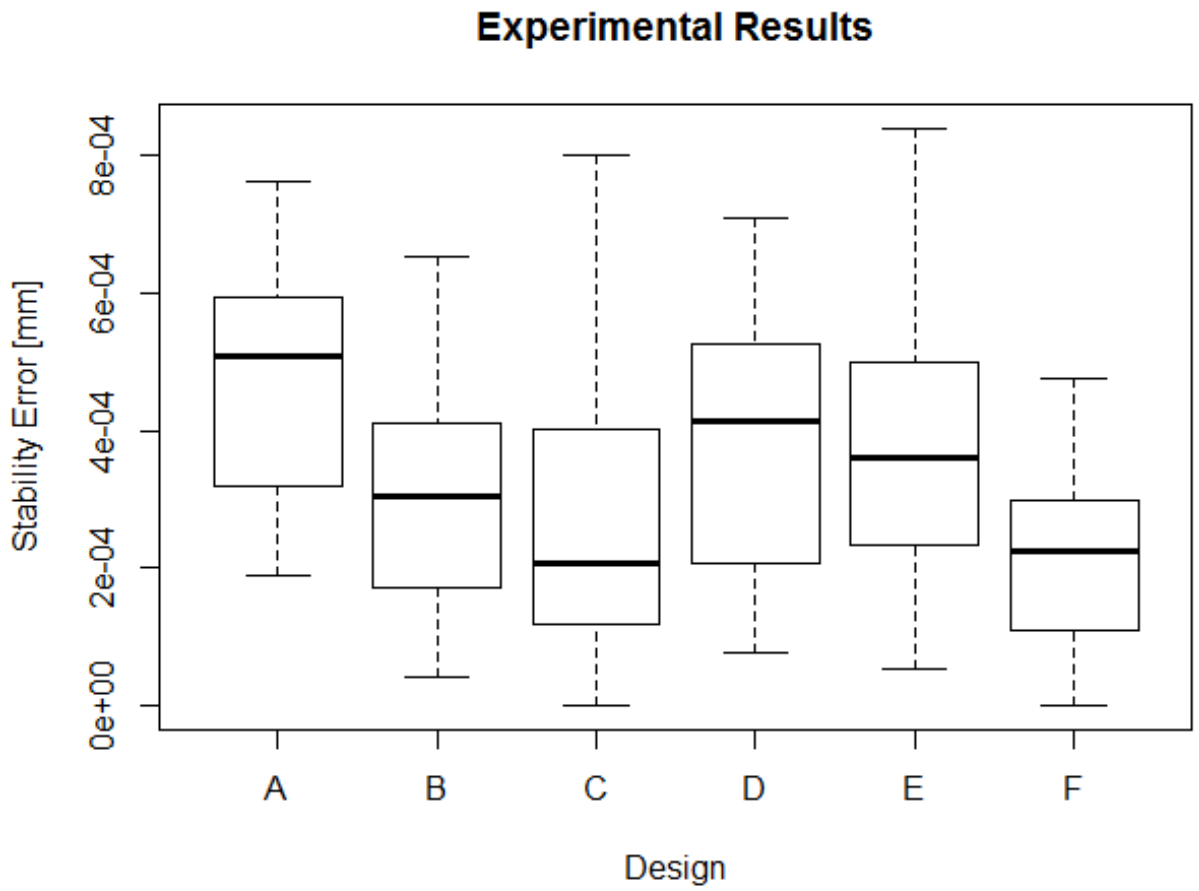

Data analysis

Analysis of Variance test (ANOVA)

Null hypothesis (H0): all target holder designs have equal mean stability error;

Alternative hypothesis (H1): some of the models have different mean stability error.

Model Adequacy Checking

Assumptions:

-Independence of responses;
-Homoscedasticity (equality of variances);
-Normality;

Model adequacy checking:

-Experiment performed in a completely randomized way;
-Qualitatively, data is well distributed;
-Residuals do not seem to have any tendencies.

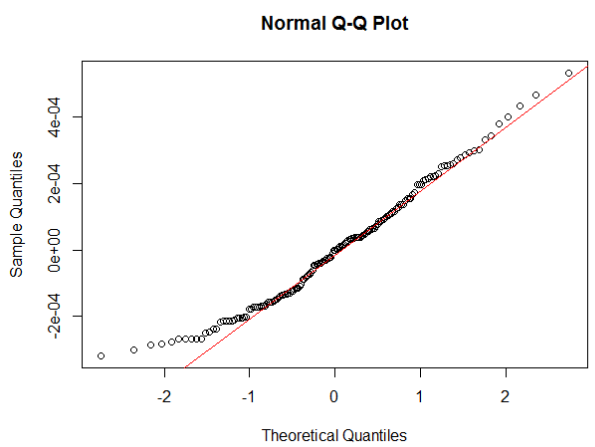

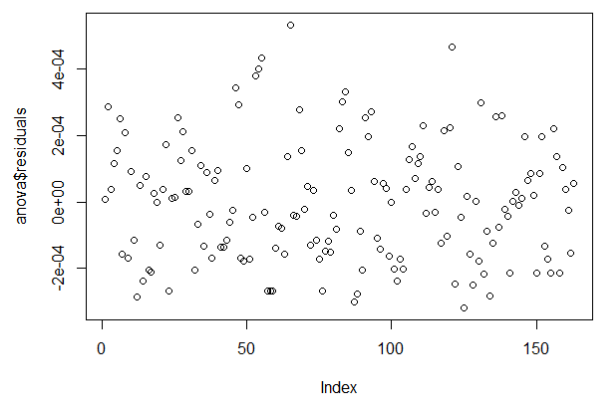

Model Adequacy Checking

Tests for Checking Homogeneity of Variances

Test Name	p-value
Batlett	0.1987
Fligner-Killeen	0.4243

Test for Normality

Test Name	p-value
D'Agostino	0.1262

P-values higher than 0.01 (99% confidence interval) -> null hypothesis is valid for those tests

Quantitative Results

The Analysis of Variances (ANOVA) gives us a p-value of 1.45e-05. For a level of significance of 0.01% (99% confidence interval), the **null hypothesis has been refuted**.

Tukey Honest Significant Test Results

Comparison	p-value
B-A	0.0168233
C-A	0.0008582
D-A	0.4164266
E-A	0.3564193
F-A	0.0000192
C-B	0.9376047
D-B	0.7385949
E-B	0.7661920
F-B	0.3477593
D-C	0.2089464
E-C	0.2216378
F-C	0.8842376
E-D	0.9999997
F-D	0.0160785
F-E	0.0166604

Quantitative Results

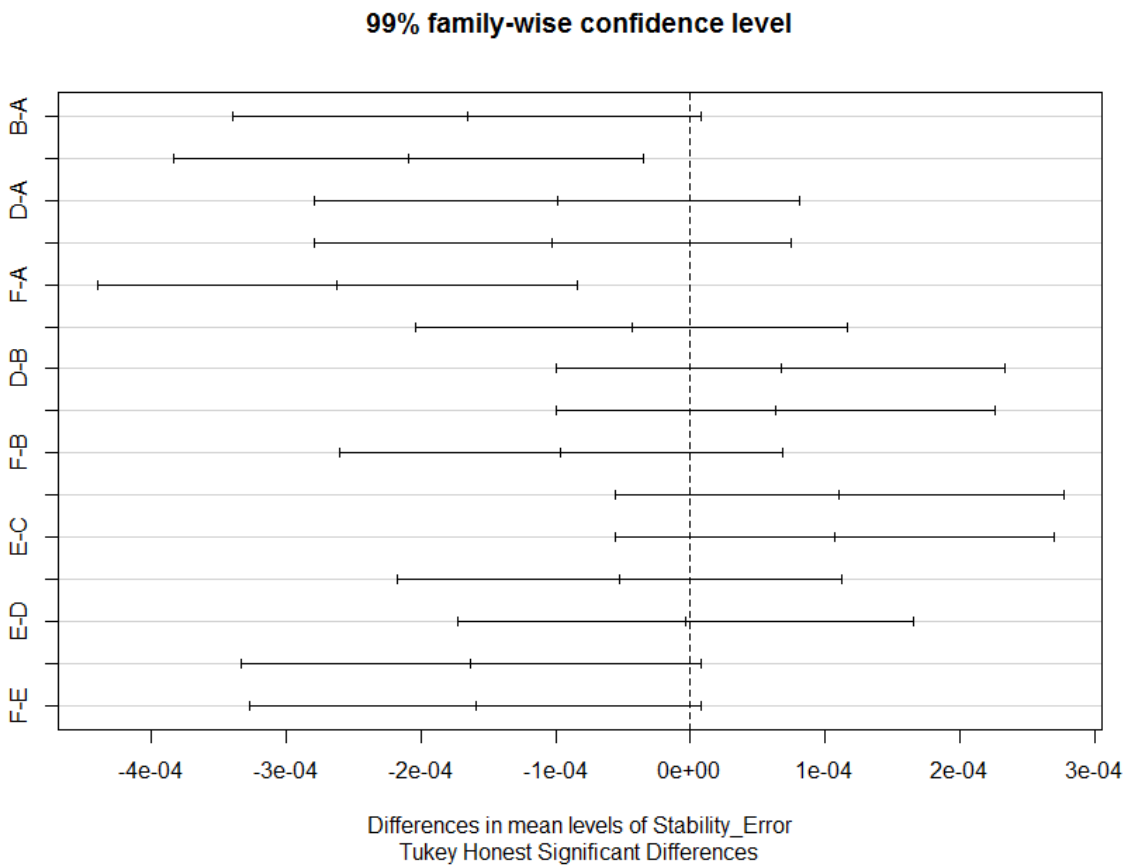

Conclusions

- Point of view from product design we could think about the possibility of combine concepts C and F (segmented cone and nickel chemical coating);

- Although there is a statistical difference between the designs, the magnitude of the stability error differ no more than **0.00026 mm** between all concepts. Considering the Laser Tracker uncertainty (MPE), the stability (or repeatability) error cannot represent a major decision factor.

Possible interpretations:
-Models with a smaller contact area have more deterministic positioning of the SMR;
-Models without the coating have marks that could cause bad stability errors;
-Superfitional hardness could explain differences between results;
-Quality of coating might explain the differences too;

Limitation of the study:

- Only one sample tested for each concept.

About the outlier removal

Data	Homoscedasticity Test (p-value)	Normality Test (p-value)	ANOVA (p-value)
Original	2.2e-16 (Bartlett)	2.2e-16 (D'Agostino)	1.79e-06
After first filtering	2.2e-16 (Bartlett)	2.2e-16 (D'Agostino)	0.00208
After second filtering	0.0001202 (Bartlett)	0.008629 (D'Agostino)	1.31e-08
After third filtering	0.00567 (Bartlett)	0.006427 (D'Agostino)	3.69e-08

Minor results

- Regarding the aluminium cone design (A), we run a t-test comparing a specimen already scratched with a brand new one. With a p-value of 0.03915, there is a statistical difference between the two samples with a 95% confidence interval. The mean stability error was **0.00065 mm against 0.00052 mm**. That fact indicates that an already scratched contact area is more stable than a new one (we used the specimen already scratched in the main experiment of this paper);

- Using the design F as a parameter, we performed a t-test between measurements following the procedure described in this paper and measurements where we did not rotate the SMR in its nest. There is a significant difference between these two treatments for 99% confidence interval (p-value of 0.0001129). The mean stability error is bigger in the last case (**0.00037 mm against 0.00099 mm**) and we performed the main experiment of this paper rotating the SMR because this is the worst-case scenario.

Thank you!

Answer to possible questions

Statistical package I've used: R Core Team. R: A language and environment for statistical computing. R Foundation for Statistical Computing, Vienna, Austria; http://www.R-project.org, 2013.

Literature on Design and Analysis of Experiments: D. C. Montgomery. Design and Analysis of Experiments, John Wiley & Sons Inc., 8th edition, New York, NY, USA, 2013.

CMM model: DEA Global Performance from Hexagon.

Why the last model is different: I didn't have time to machine and do the coating, then I just used one sample we had glued to a base to keep about the same height of the other models.

Unbalanced design, since I removed outliers from just two or three concepts: ANOVA algorithm from R software can handle this.

Why did I choose the geometric mean: Other performance measures I could think of didn't allow to see the difference between the designs according to simulations I've performed.