Alignment of Superconducting Undulators at the APS

Jaromir M. Penicka

for the APS SCU team

Outline

- Introduction
- SCU design overview
- SCU0 Assembly and fiducialization
- Cooling displacement compensation
- Alignment in the APS storage ring
- Final beam-based alignment and monitoring
- Summary

Advanced Photon Source (APS)

SCU0 team

Y. Ivanyushenkov (ASD)
Technical Lead and Commissioning Co-Lead

K. Harkay (ASD-AOP)
Commissioning Co-Lead

Commissioning Team
L. Boon (ASD-AOP)
M. Borland (ASD-ADD)
G. Decker† (ASD-DIA)
J. Dooling (ASD-AOP)
L. Emery† (ASD-AOP)
R. Flood (ASD-AOP)
M. Jaski (ASD-MD)
J. Lang (ASD-ESH/QA)
J. Lang (XSD-ADD)
F. Lenkszus (AES-CTL)
D. Robinson (XSD-MM)
V. Sajaev* (ASD-AOP)
K. Schroeder (ASD-AOP)
N. Sereno* (ASD-DIA)
H. Shang (ASD-AOP)
R. Soliday (ASD-AOP)
X. Sun (ASD-DIA)
A. Xiao (ASD-AOP)
A. Zholents (ASD-DD)

Core Team

Management:	E. Gluskin*(ASD-MD)
Simulation:	R. Dejus (ASD-MD)
	S. Kim (ASD-MD)
	R.L. Kustom (ASD-RF)
	Y. Shiroyanagi (ASD-MD)
Design:	D. Pasholk (AED-DD)
	D. Skiadopoulos (AES-DD)
	E. Trakhtenberg (AES-MED)
Cryogenics:	J. Fuerst (ASD-RF)
	Q. Hasse (ASD-MD)
	J. Kaluzny (ASD-RF)
Measurements:	M. Abliz (ASD-MD)
	C. Doose (ASD-MD)
	M. Kasa (ASD-MD)
	I. Vasserman (ASD-MD)
Controls:	B. Deriy (ASD-PS)
	M. Smith (AES-CTL)
Tech. support:	S. Bettenhausen (ASD-MD)
	K. Boerste (ASD-MD)
	J. Gagliano (ASD-MOM)
	M. Merritt (ASD-MD)
	J. Terhaar (ASD-MD)

Budker Institute Collaboration
(Cryomodule and Measurement System Design)
N. Mezentsev
V. Syrovatin
V. Tsukanov
V. Lev

FNAL Collaboration
(Resin Impregnation)
A. Makarov

UW-Madison Collaboration
(Cooling System)
J. Pfotenhauer
D. Potratz
D. Schick

Technical Support
R. Bechtold (AES-MOM)
D. Capatina (AES-MED)
J. Collins (AES-MED)
P. Den Hartog* (AES-MED)
R. Farnsworth* (AES-CTL)
G. Goeppner* (AES-MOM)
J. Hoyt (AES-MOM)
W. Jansma (AES-SA)
J. Penicka* (AES-SA)
J. Wang* (ASD-PS)
S. Wesling (AES -SA)

Former management: E. Moog† (ASD-MD)
Associate Project Manager: M. White (APS-U)

*Group Leader † Former group leader

SCU cryostat

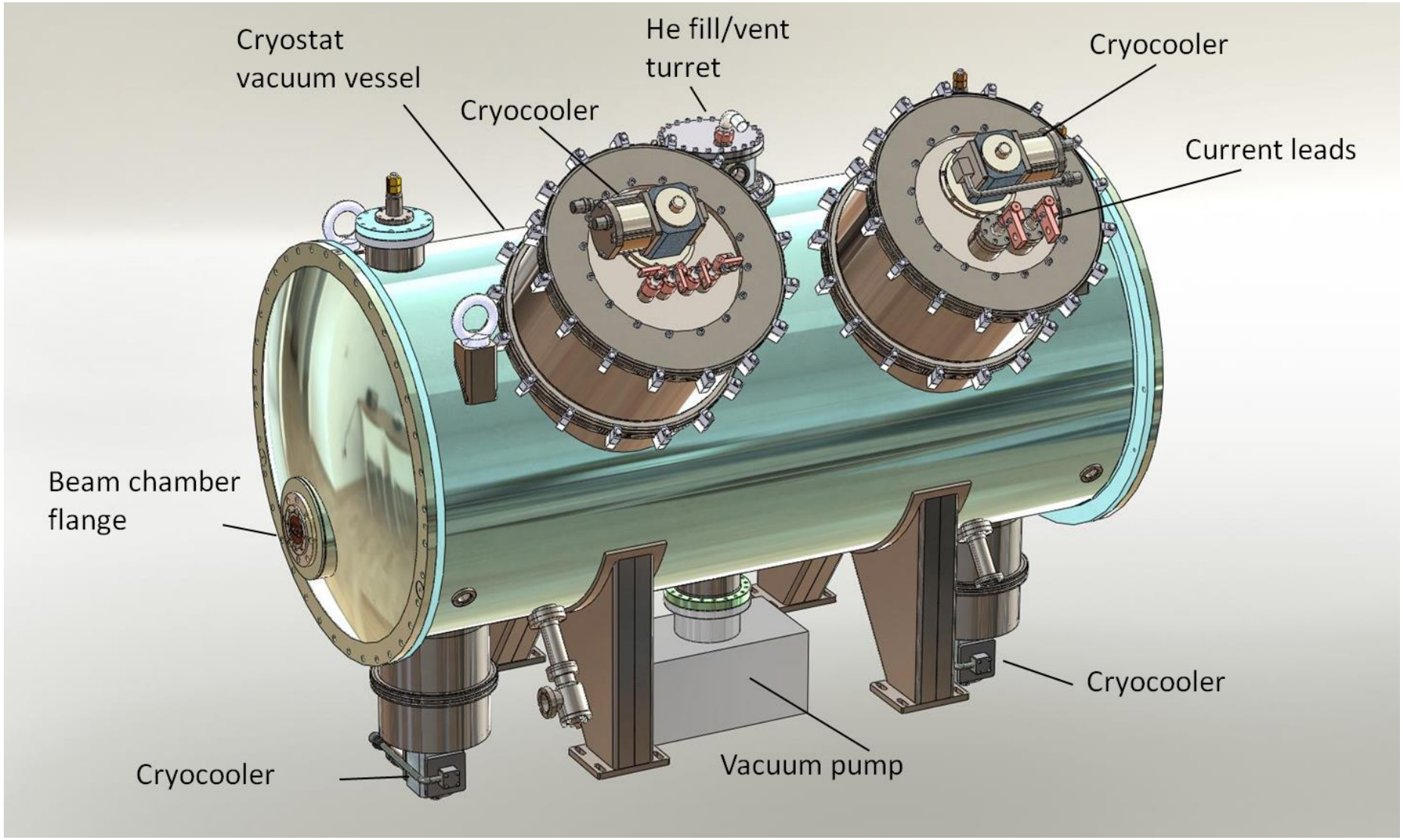

SCU0 cryostat structure

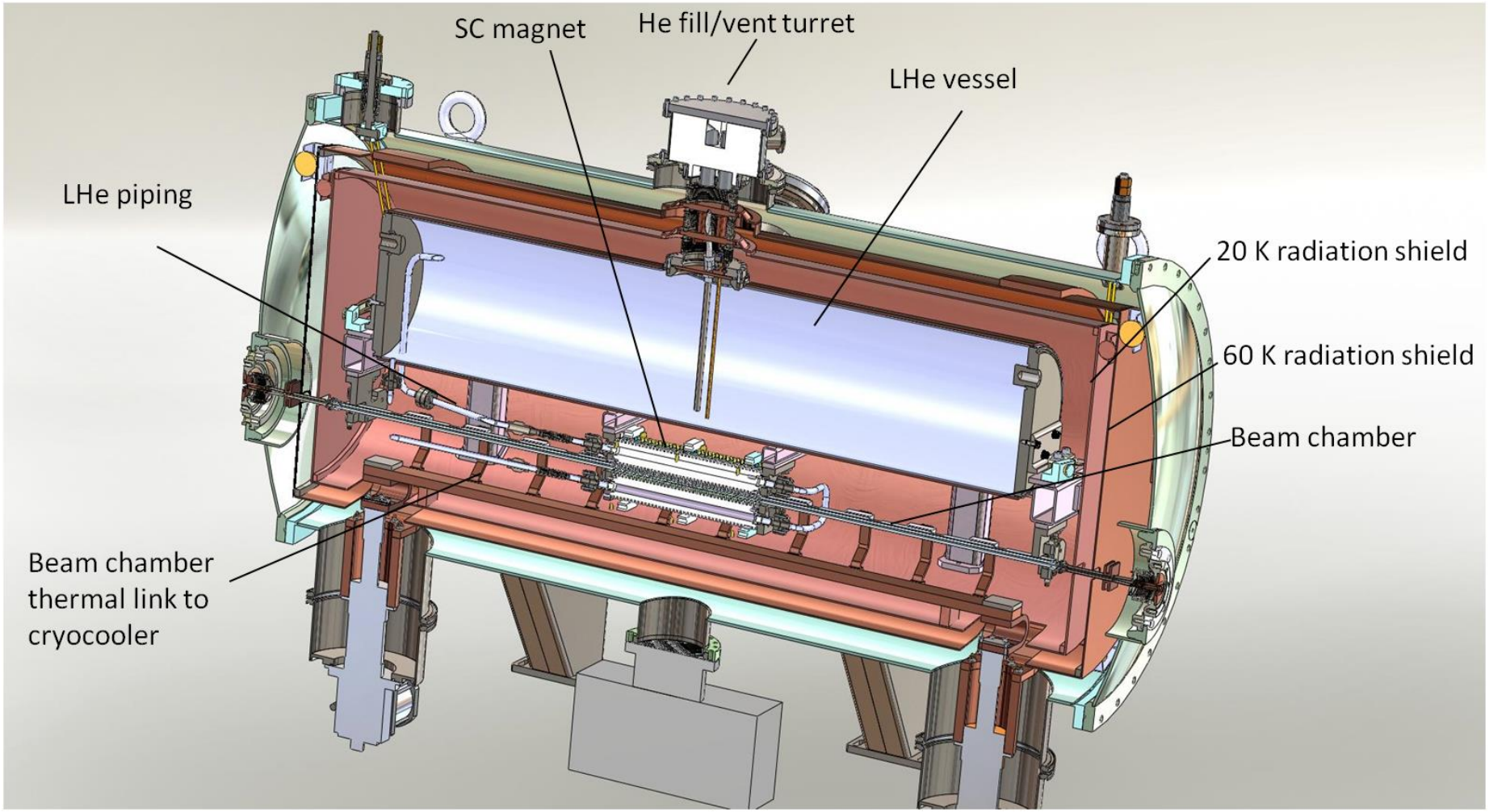

SCU0 and SCU1 parameters

Parameter	SCU0	SCU1
Electron beam energy	7.0 GeV	7.0 GeV
Photon energy at 1st harmonic	20-25 keV	12-25 keV
Undulator period	16 mm	18 mm
Magnetic gap	9.5 mm	9.5 mm
Magnetic length	0.33 m	1.14 m
Cryostat length	2.06 m	2.06 m

Alignment Tolerances*

Alignment Tolerance	X [mm]	Y [mm]
Magnetic structure	±0.150	±0.150
SCU0 vacuum chamber relative to the magnetic structure	N/A	±0.150
SCU0 vacuum chamber relative to the U33 ID chamber	±0.150	±0.150

* K. Harkay et al., "APS-U Superconducting Undulator Physics Requirements Document," Technical Report APS_1425203, APS, 2011.

The Challenge of Alignment?

- How to align an object suspended by Kevlar
- That changes temperature by 300 degrees K
- And is encapsulated like this?

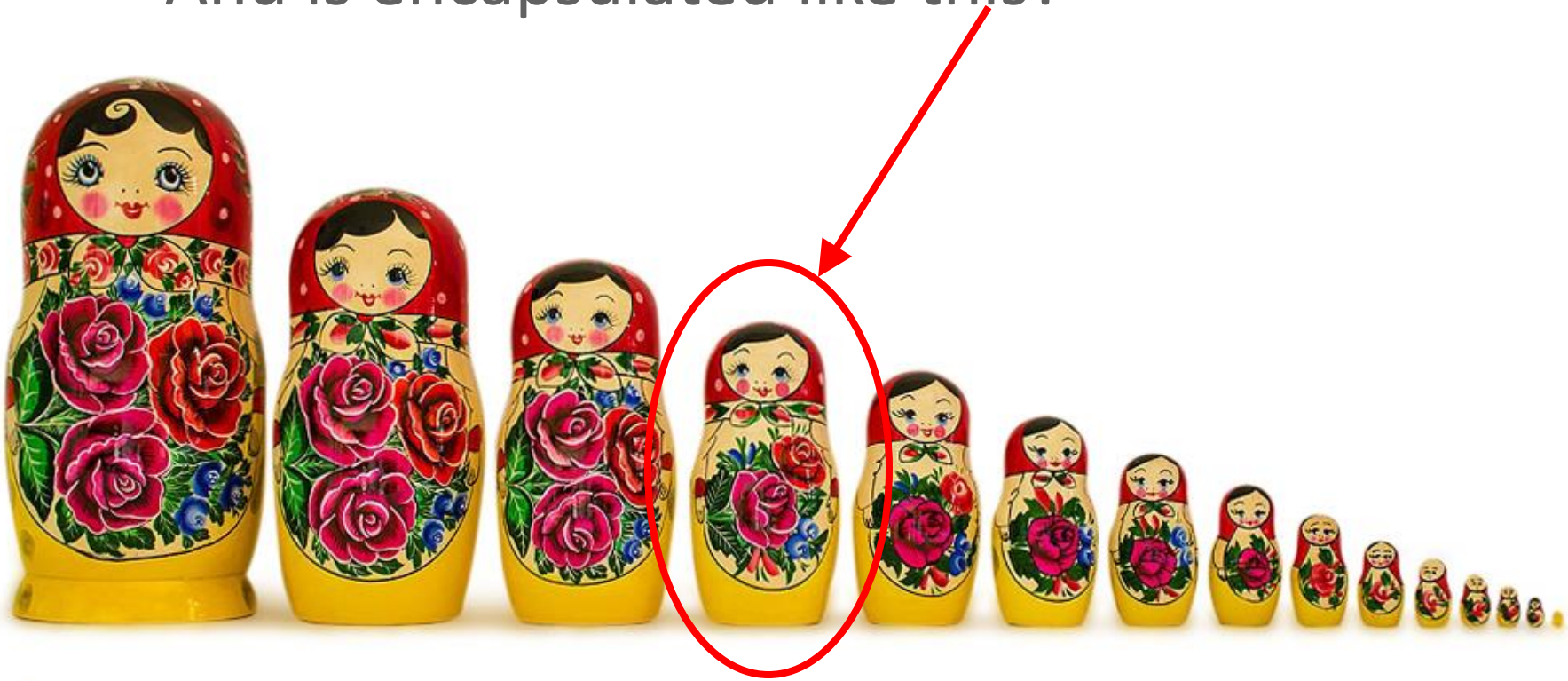

Cold Mass

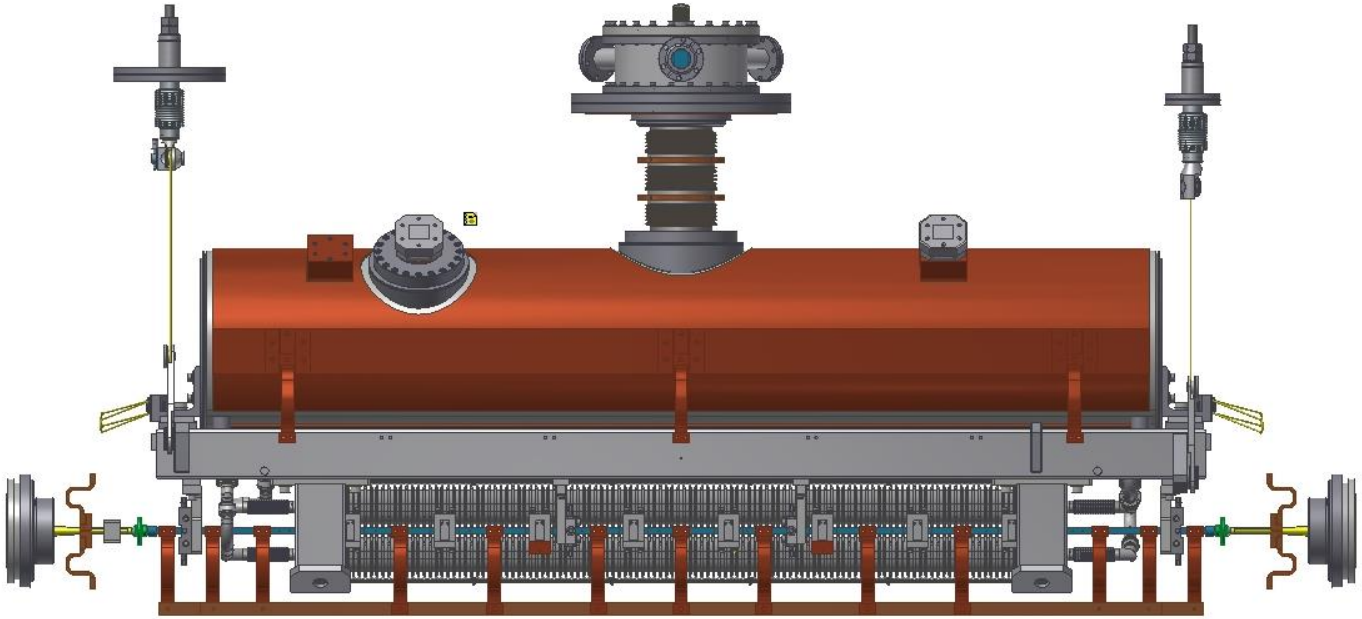

20 K Radiation Shield

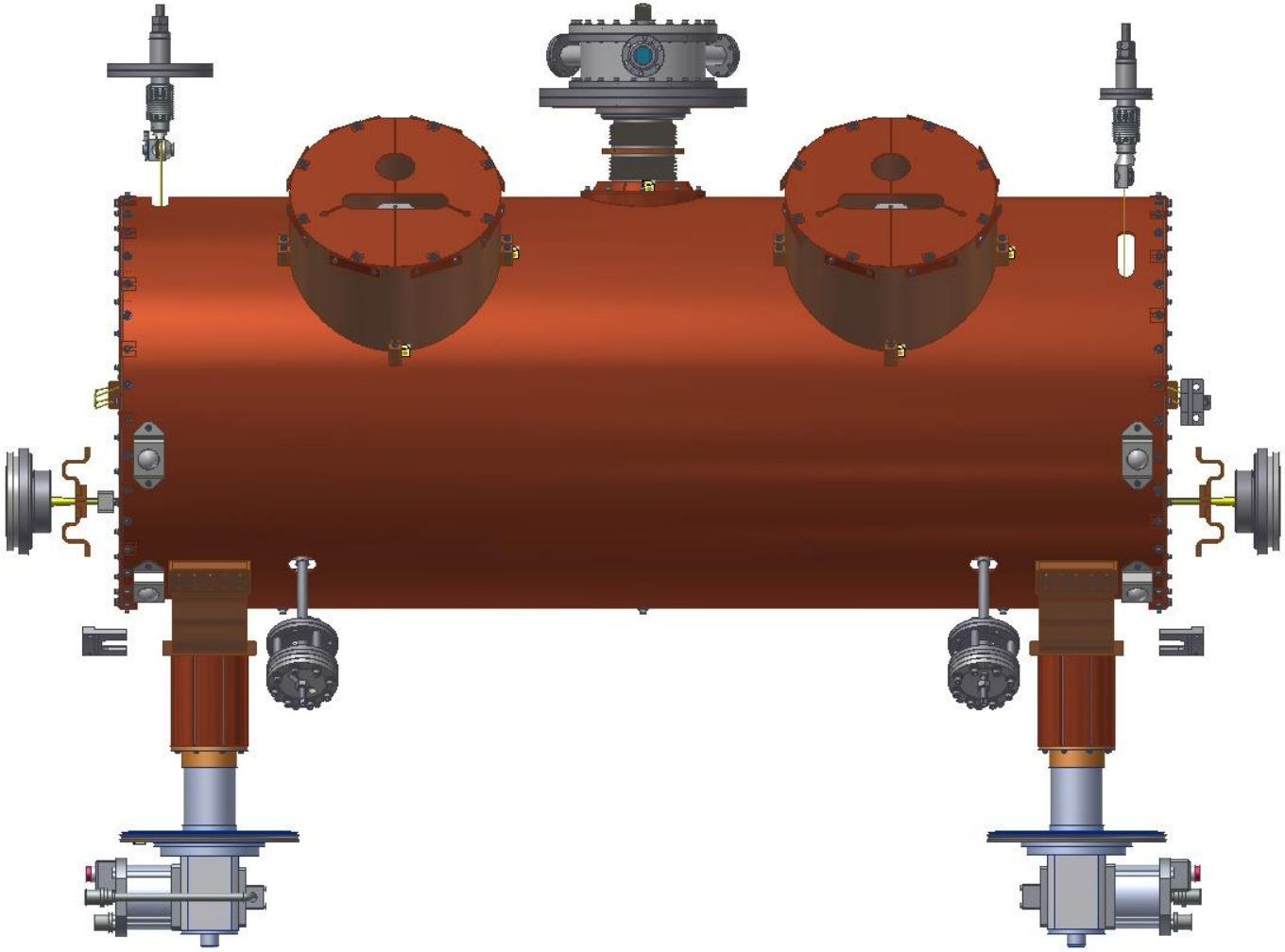

60 K Radiation Shield

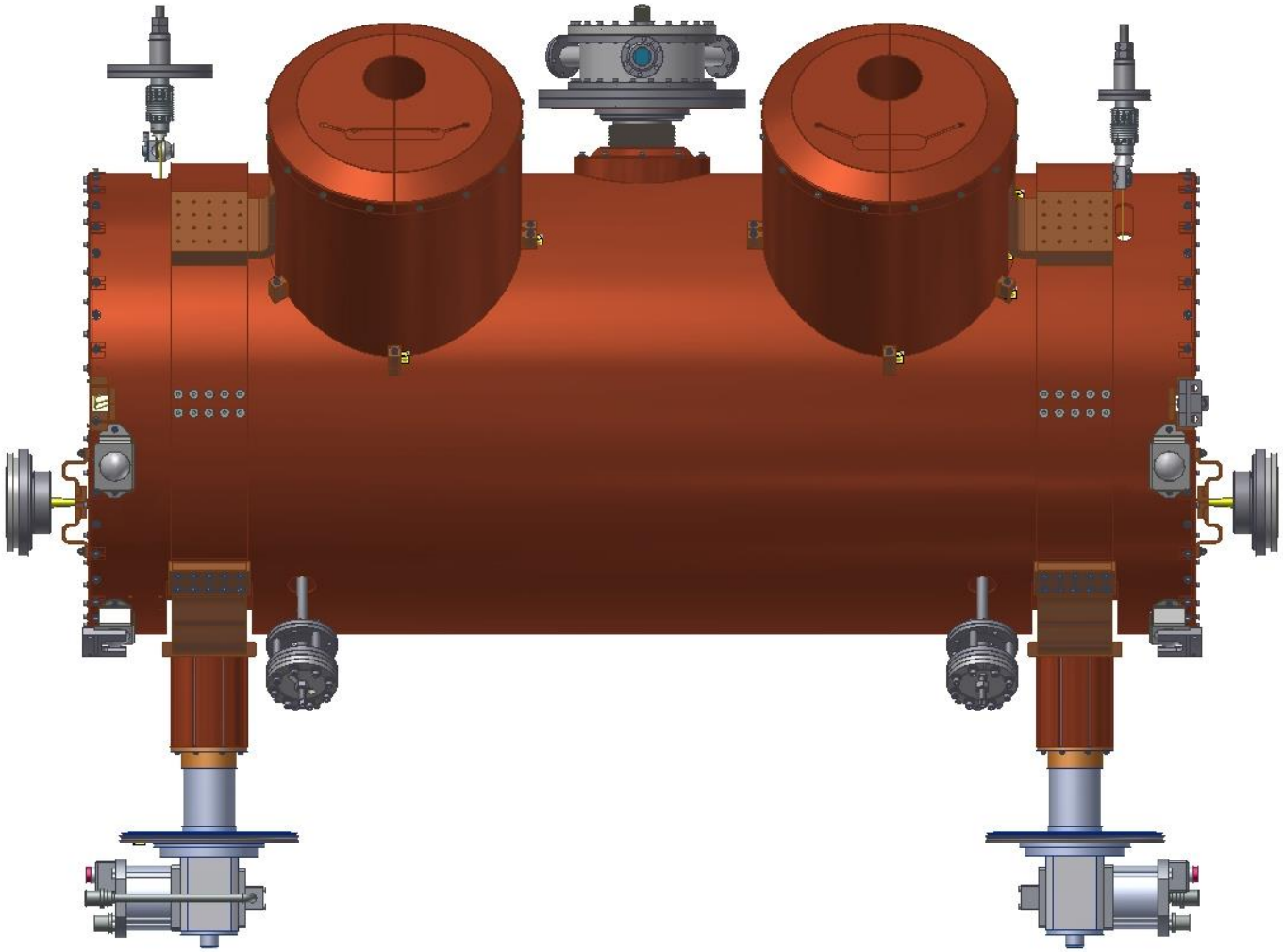

Vacuum Vessel

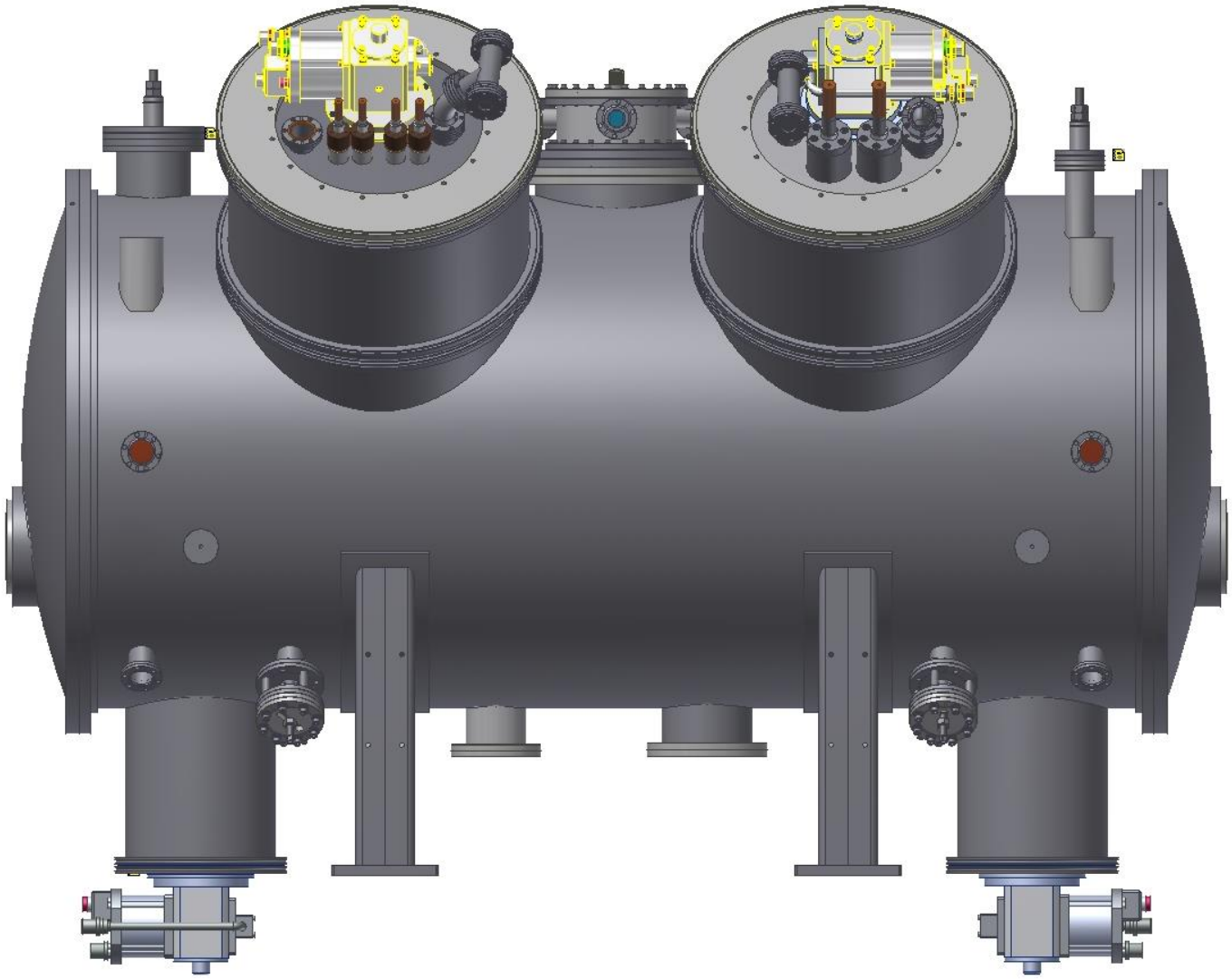

Cold Mass Assembly

Support frame – magnet structure – vacuum chamber

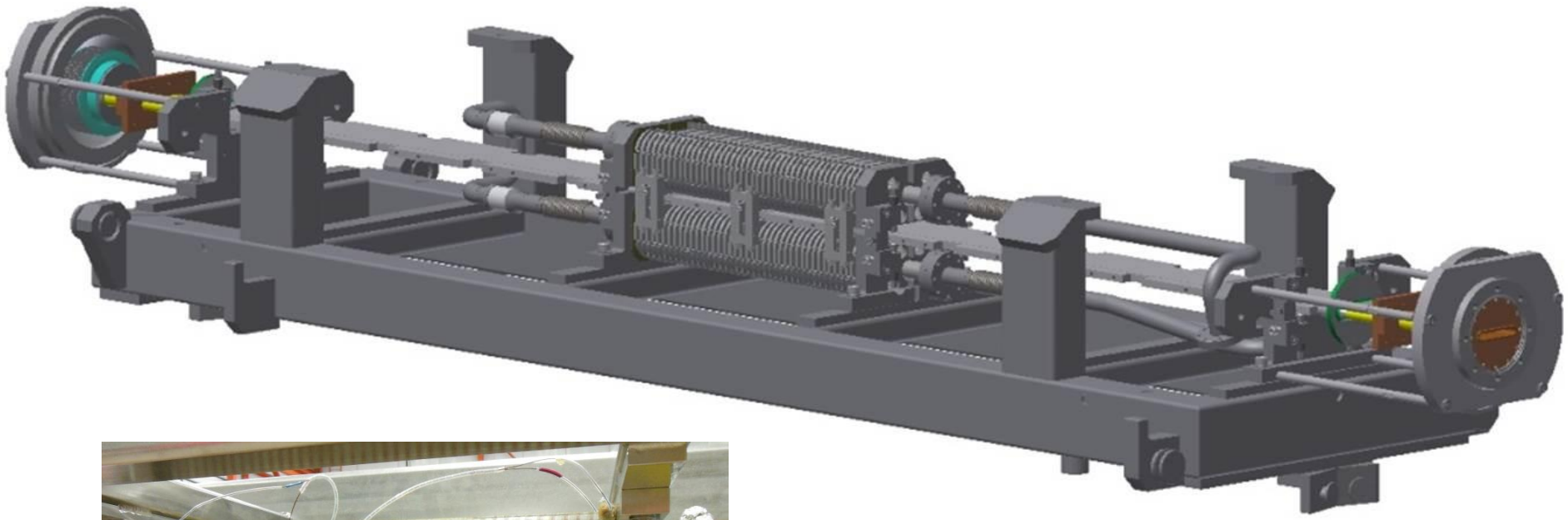

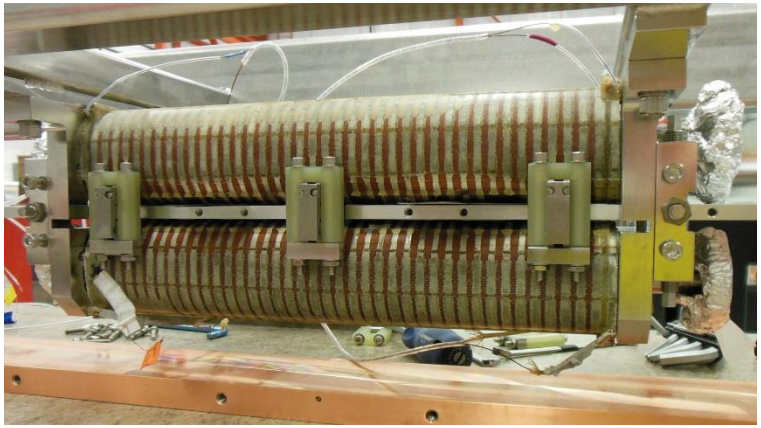

- Conventional optical tooling methods
- Tolerance ±75 microns in X,Y achievable

Cold Mass Fiducialization

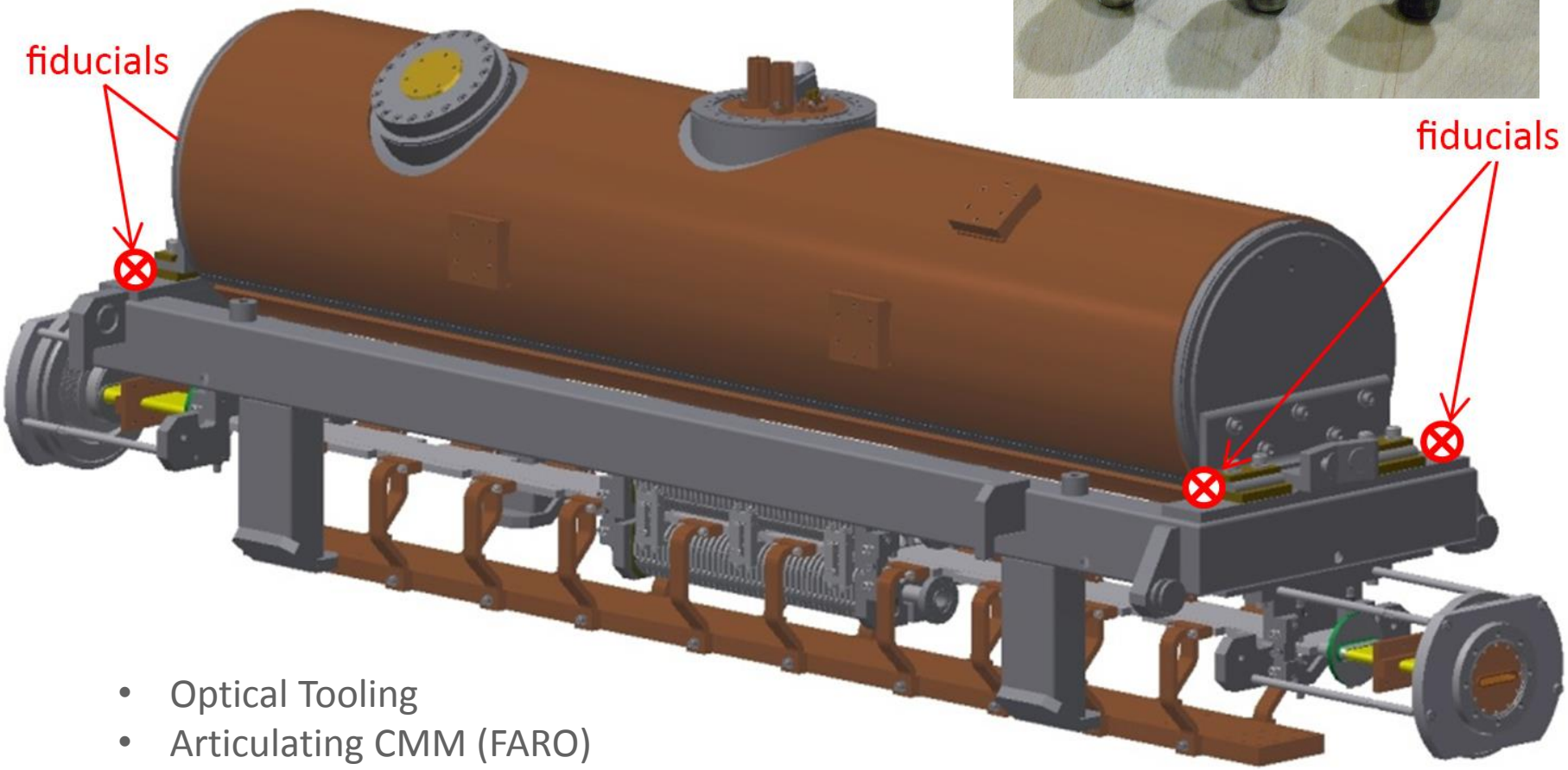

- Optical Tooling
- Articulating CMM (FARO)

Cold Mass - Vacuum Vessel Assembly

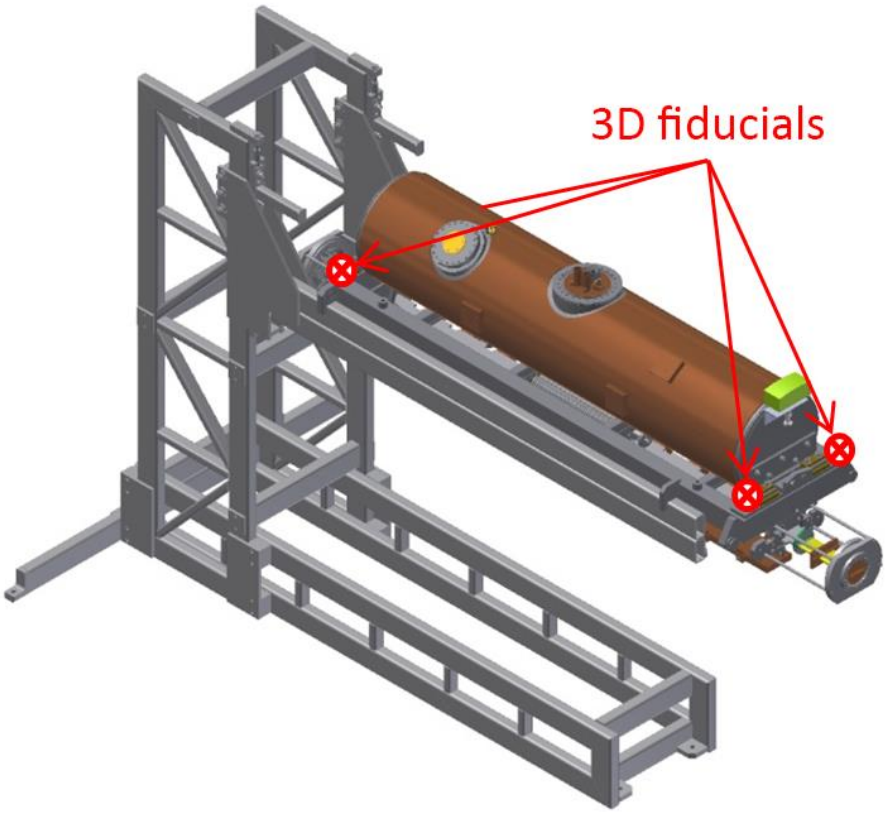

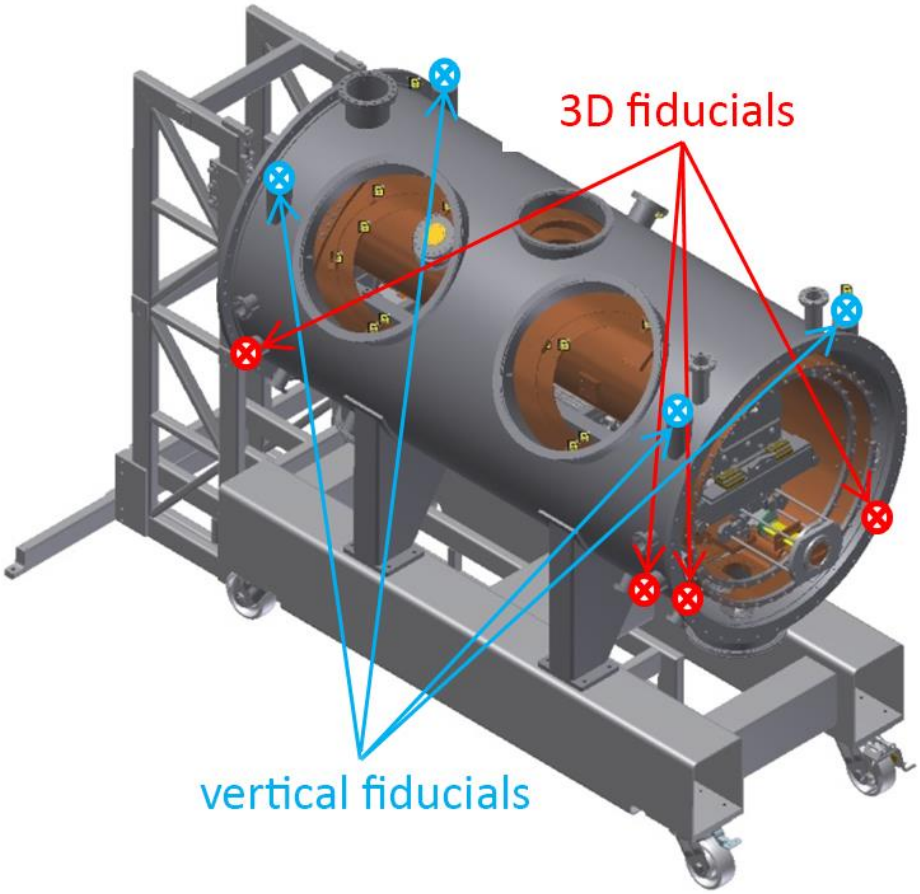

Kevlar band suspension system

- The alignment of the cold mass within the vacuum vessel assembly was accomplished by adjusting the Kevlar suspension bands .
- The coordinates of the vacuum vessel and cold mass fiducials were monitored with the laser tracker and N3 optical level.

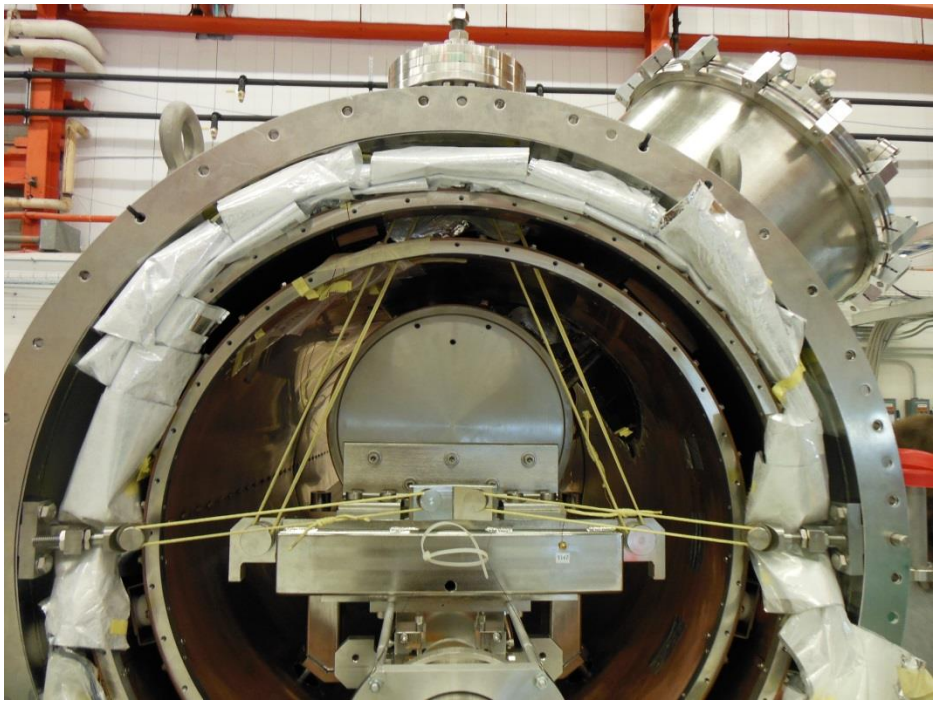

Upstream end

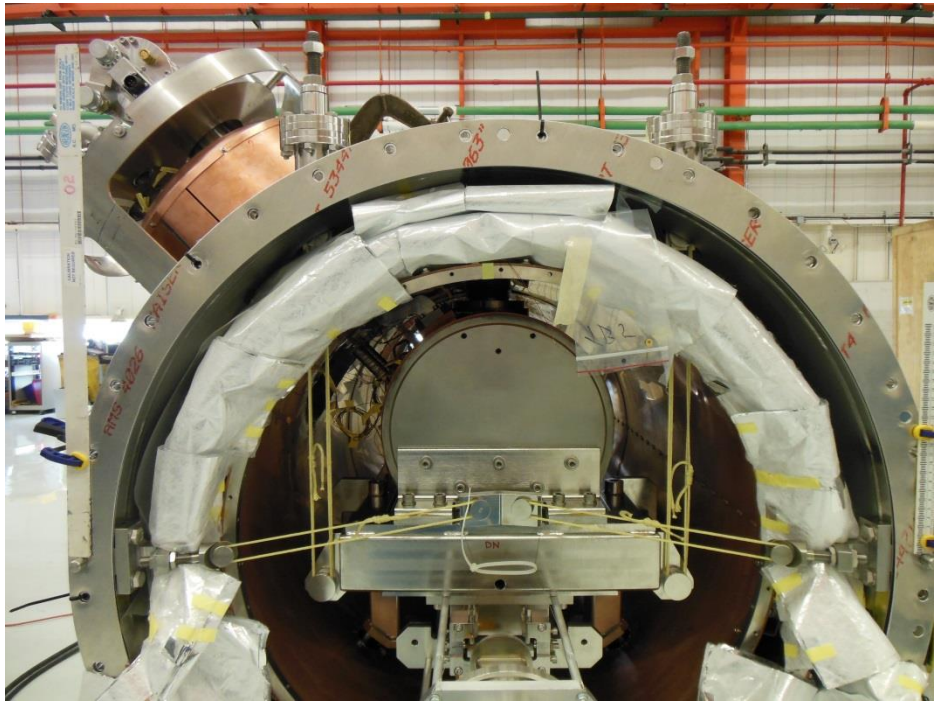

Downstream end

Cooling Displacement Test

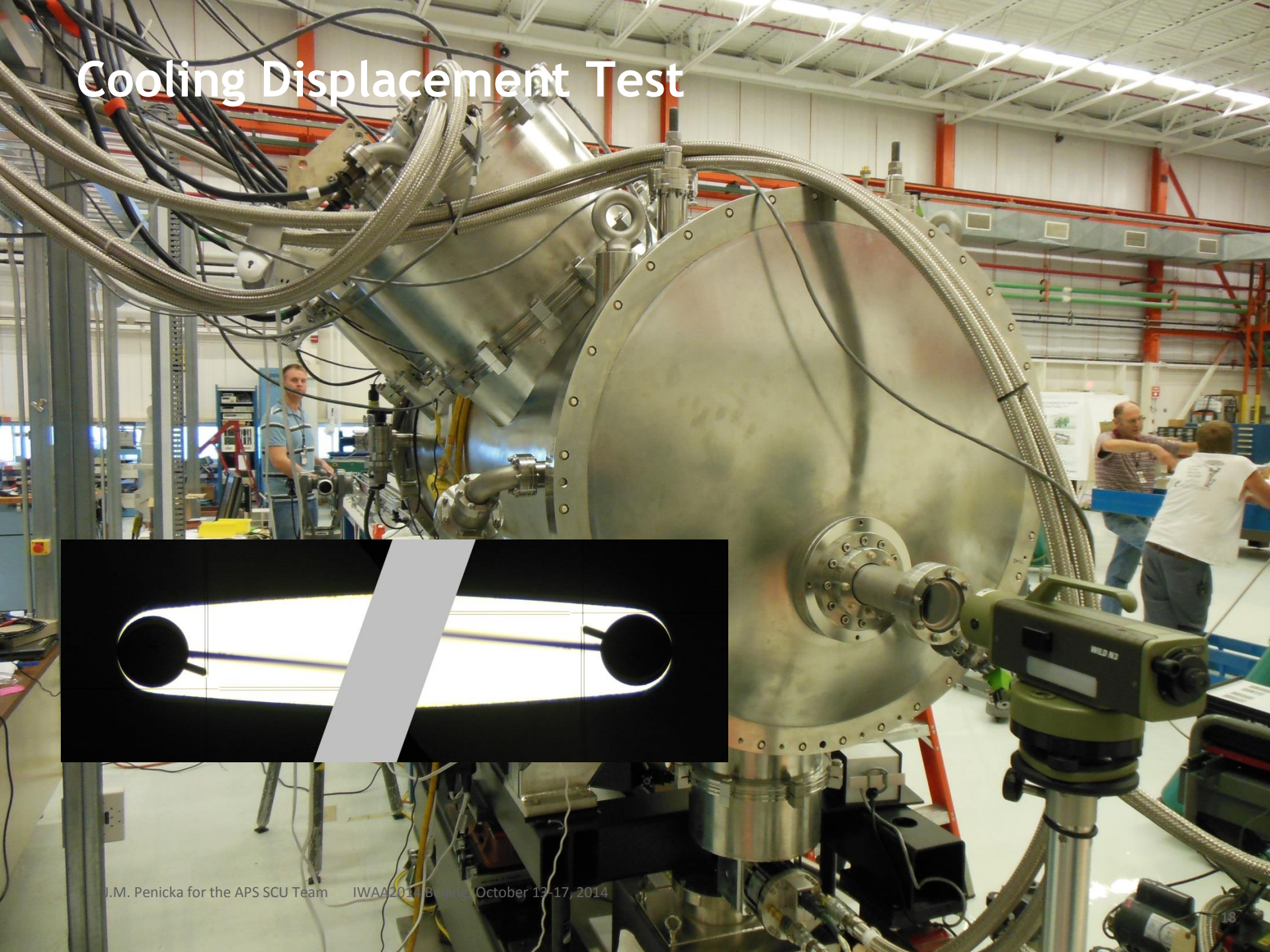

Cooling Displacement Test

- The seven pairs of spherical targets were placed in the beam chamber at predefined locations .
- The pairs of sphere targets were "spring-loaded" with stiff wire to engage the cylindrical profile of the chamber in the horizontal plane.
- By observing the top and bottom edges of the spheres by N3 optical level the vertical position of the beam chamber was measured during the cool-down and warm-up cycle.

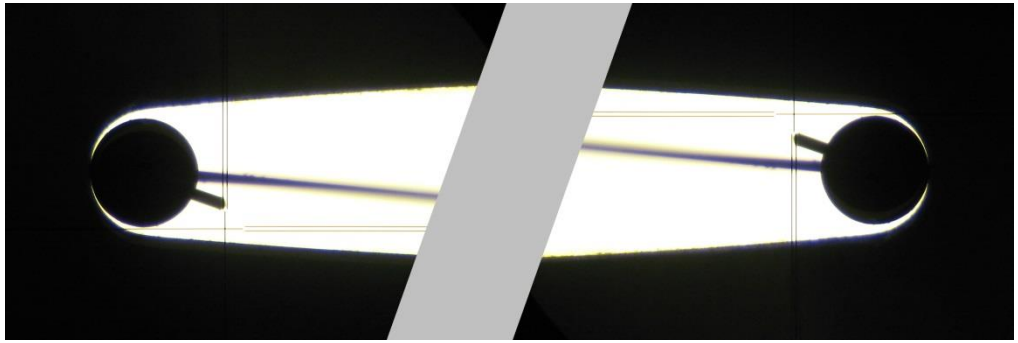

Spherical target inside the prototype of the SCU0 vacuum chamber photographed through the alignment scope of the optical level.

Location of Spherical Targets

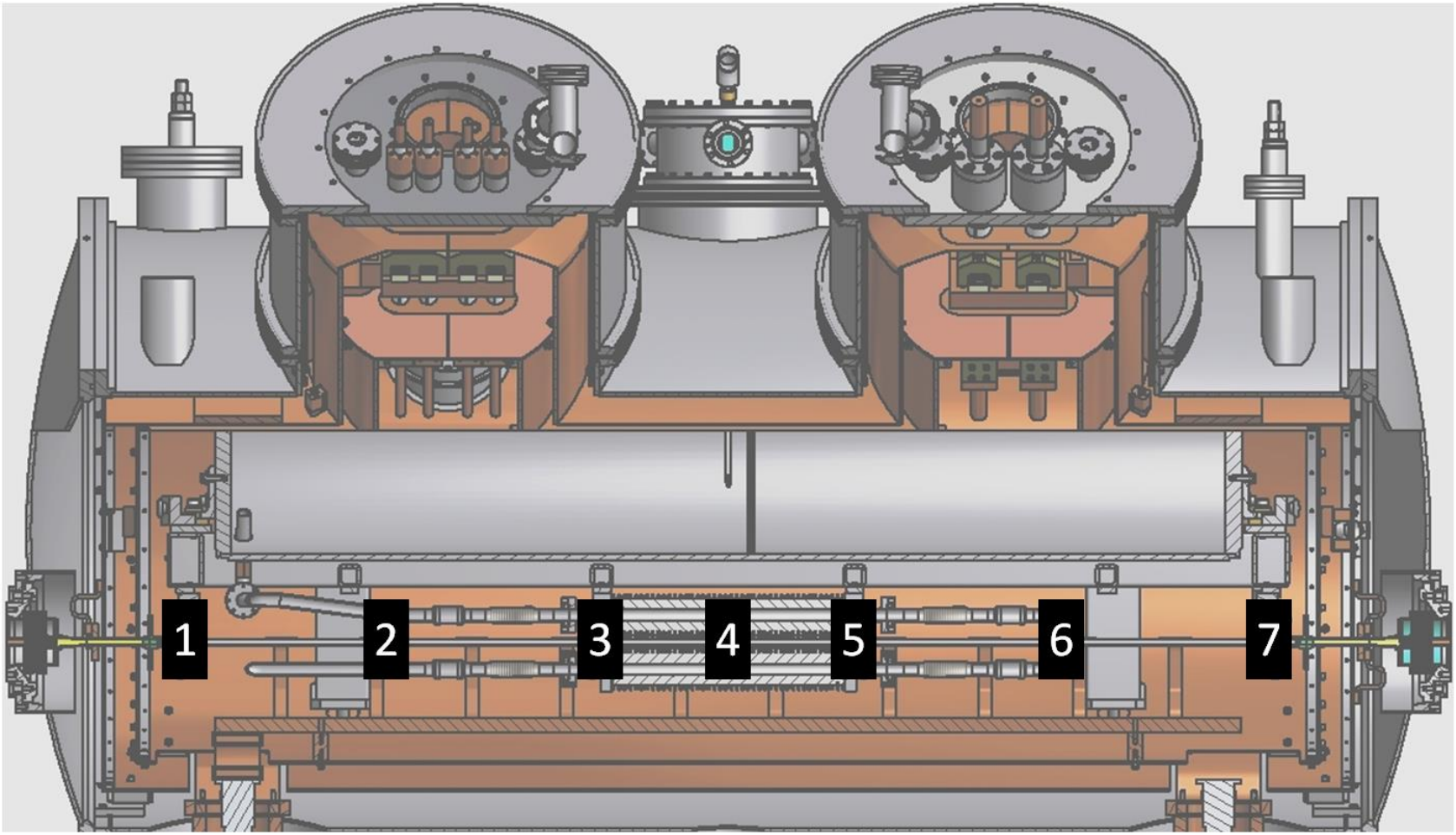

Positions 1, 3, 5, and 7 are at the beam chamber support locations.

Courtesy M. Kasa

Cool-down and Warm-up Cycle

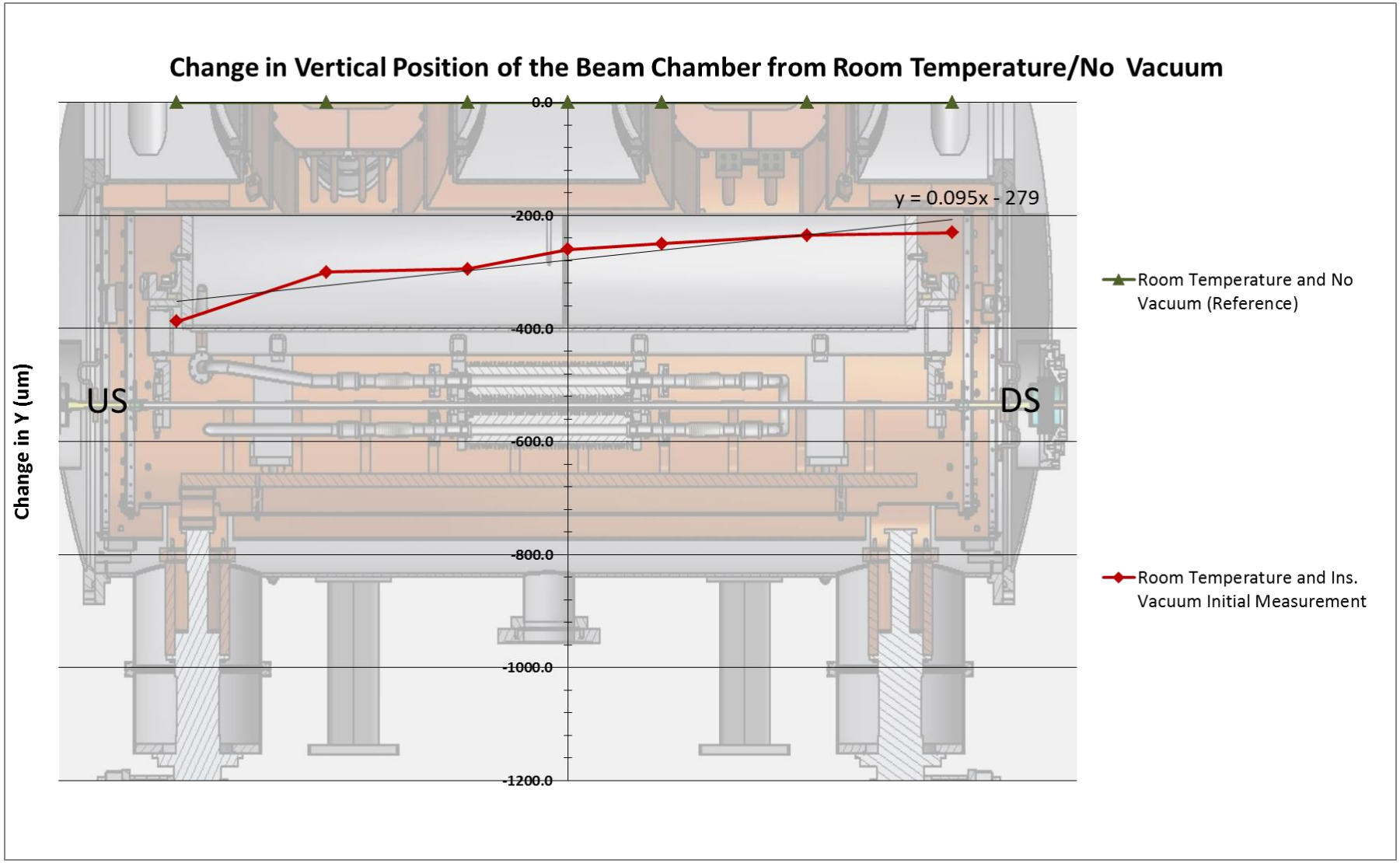

Courtesy M. Kasa

Cool-down and Warm-up Cycle

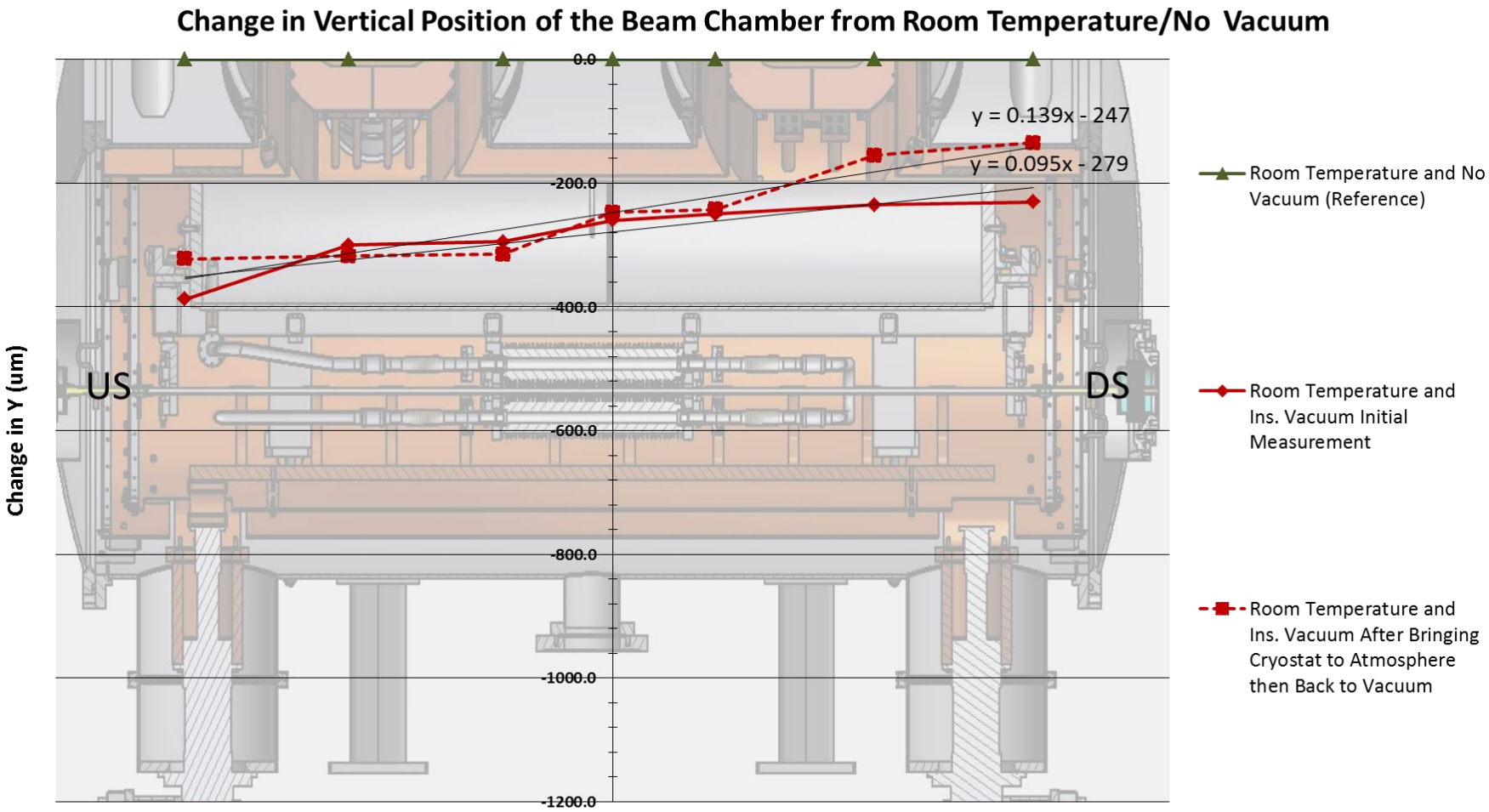

Courtesy M. Kasa

Cool-down and Warm-up Cycle

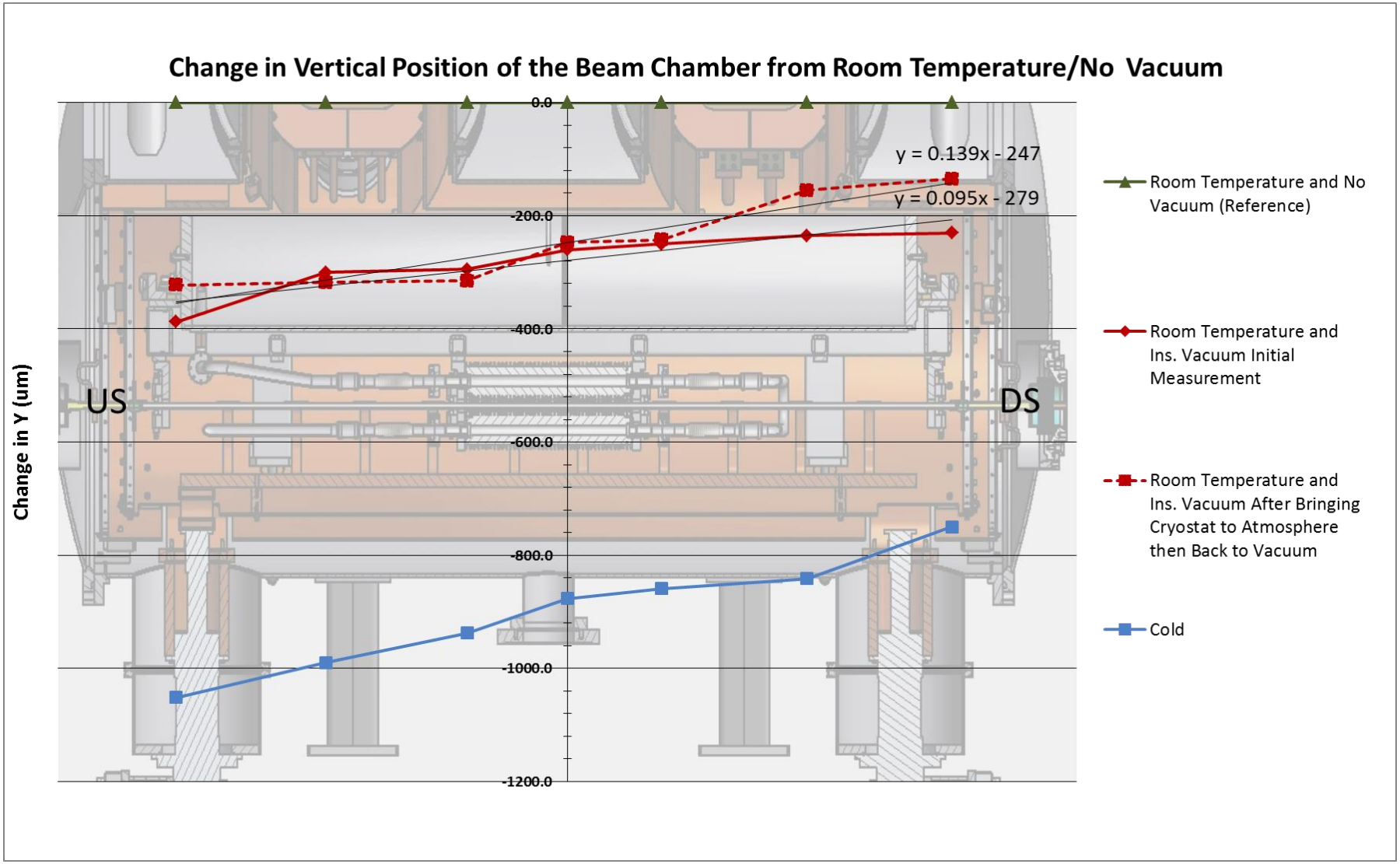

Courtesy M. Kasa

Cool-down and Warm-up Cycle

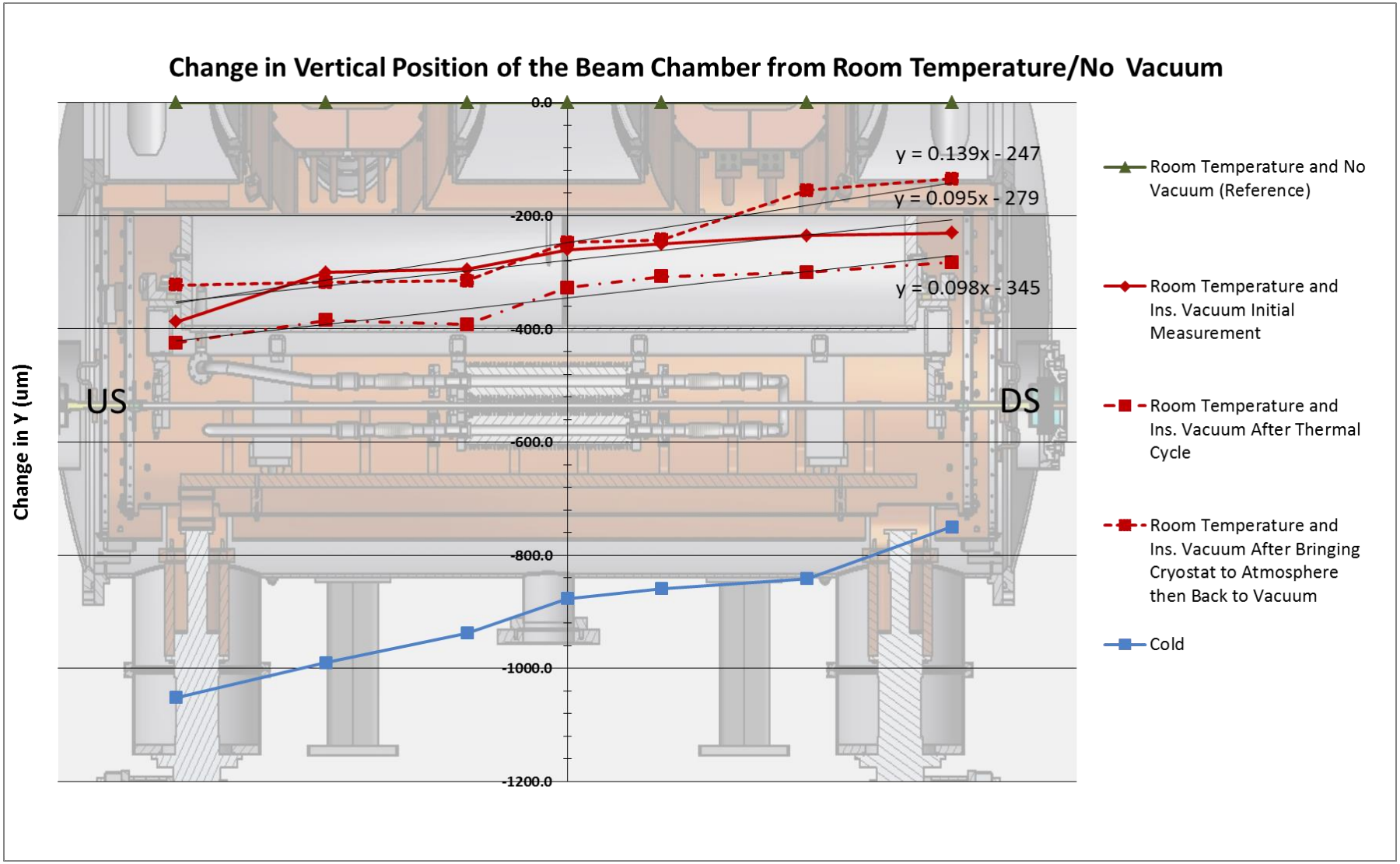

Courtesy M. Kasa

Aluminum Links Compensation

- To eliminate displacement of the beam chamber/magnets assembly during the cooling process the Kevlar strings were modified with the aluminum links.
- The length of the aluminum links was calculated to compensate for the thermal elongation of Kevlar and thermal contraction of stainless steel part as well as mechanical elongation of the Kevlar caused by pressure difference.

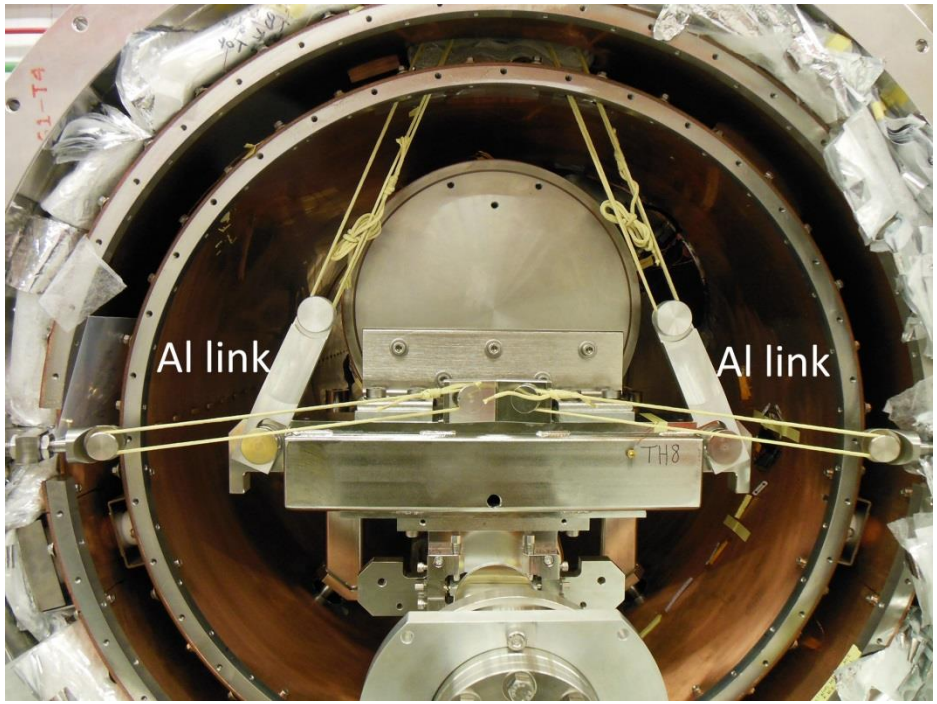

Upstream end

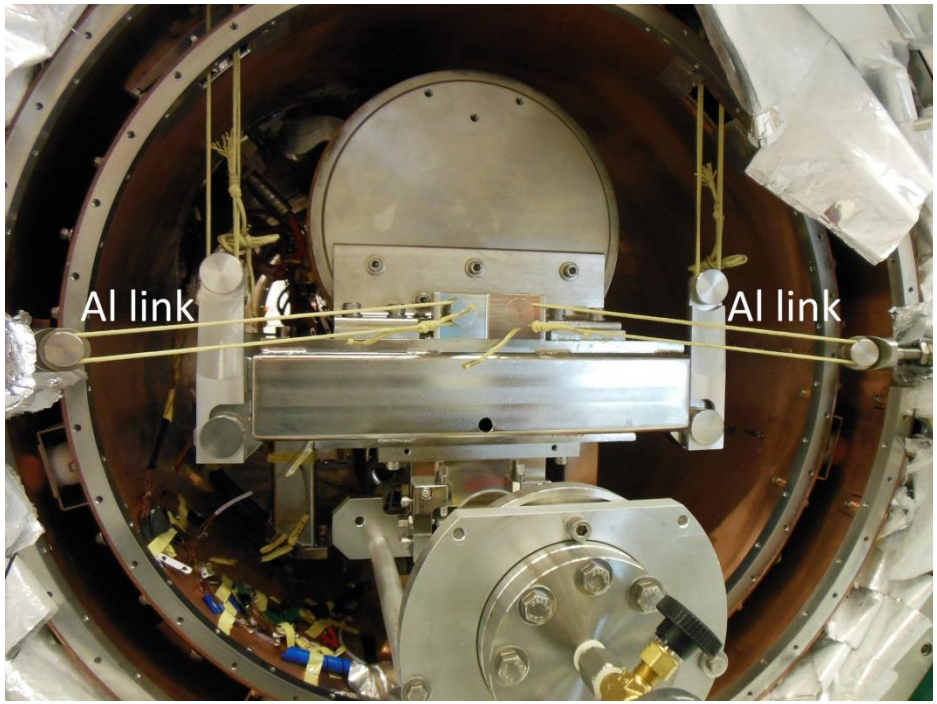

Downstream end

SCU magnetic measurement

- Mitigation of the thermal shift verified during the next cool-down warm-up cycle.
- Beam chamber monitoring was incorporated into the magnetic measurement procedure.

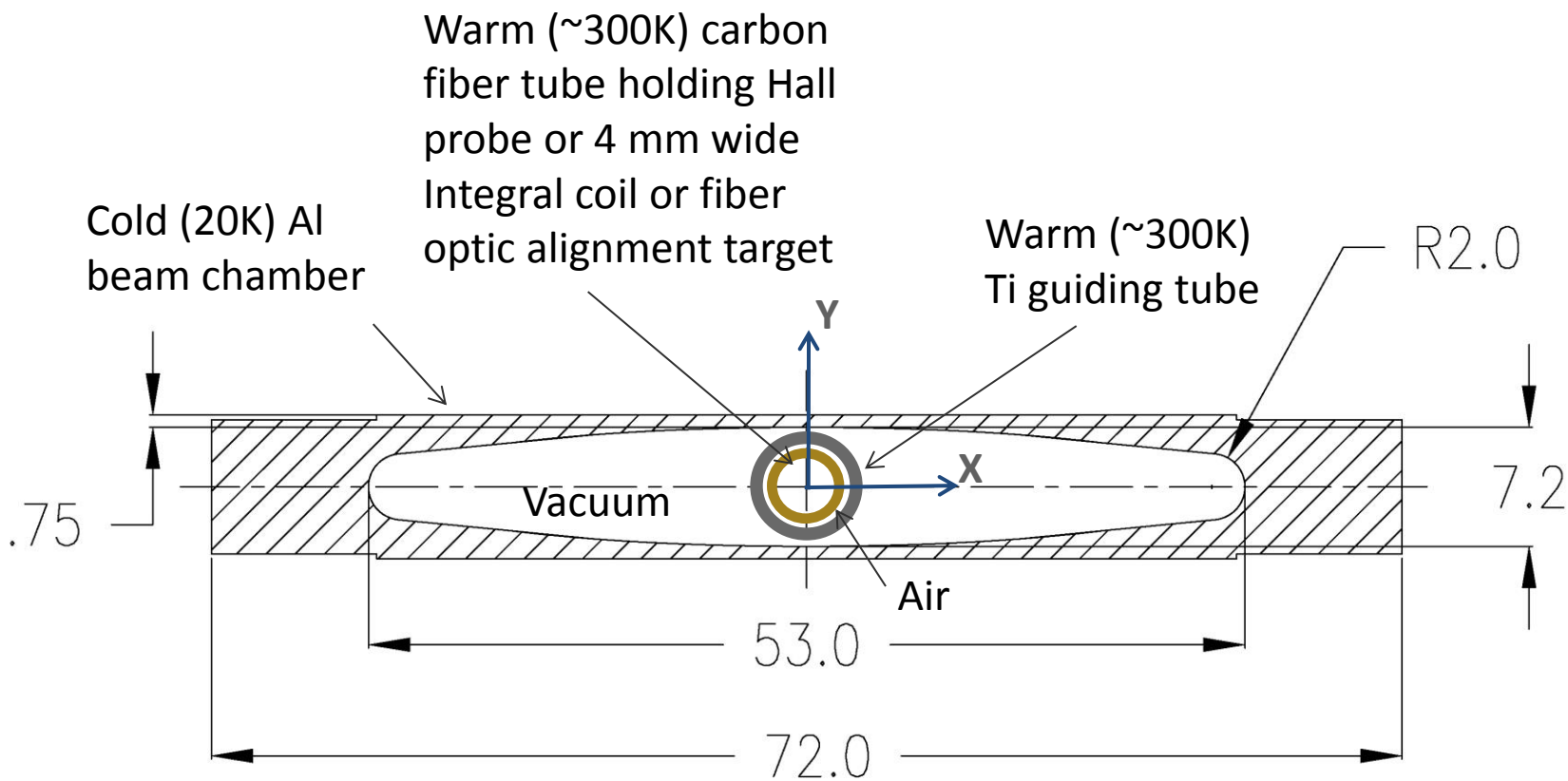

Courtesy C. Doose

Alignment in the APS storage ring

- The SCU0 was installed in SR sector 6, downstream of a half-length ID chamber with 7.5 mm vertical aperture.
- An optical level and precision transit-square were utilized to position the SCU0 at its ideal location.
- A laser tracker oriented to the storage ring control network was used to provide a redundant quality assurance check.
- Beam-based alignment was foreseen as a necessary final step to confirm and fine tune the position of the SCU0 after cool-down.

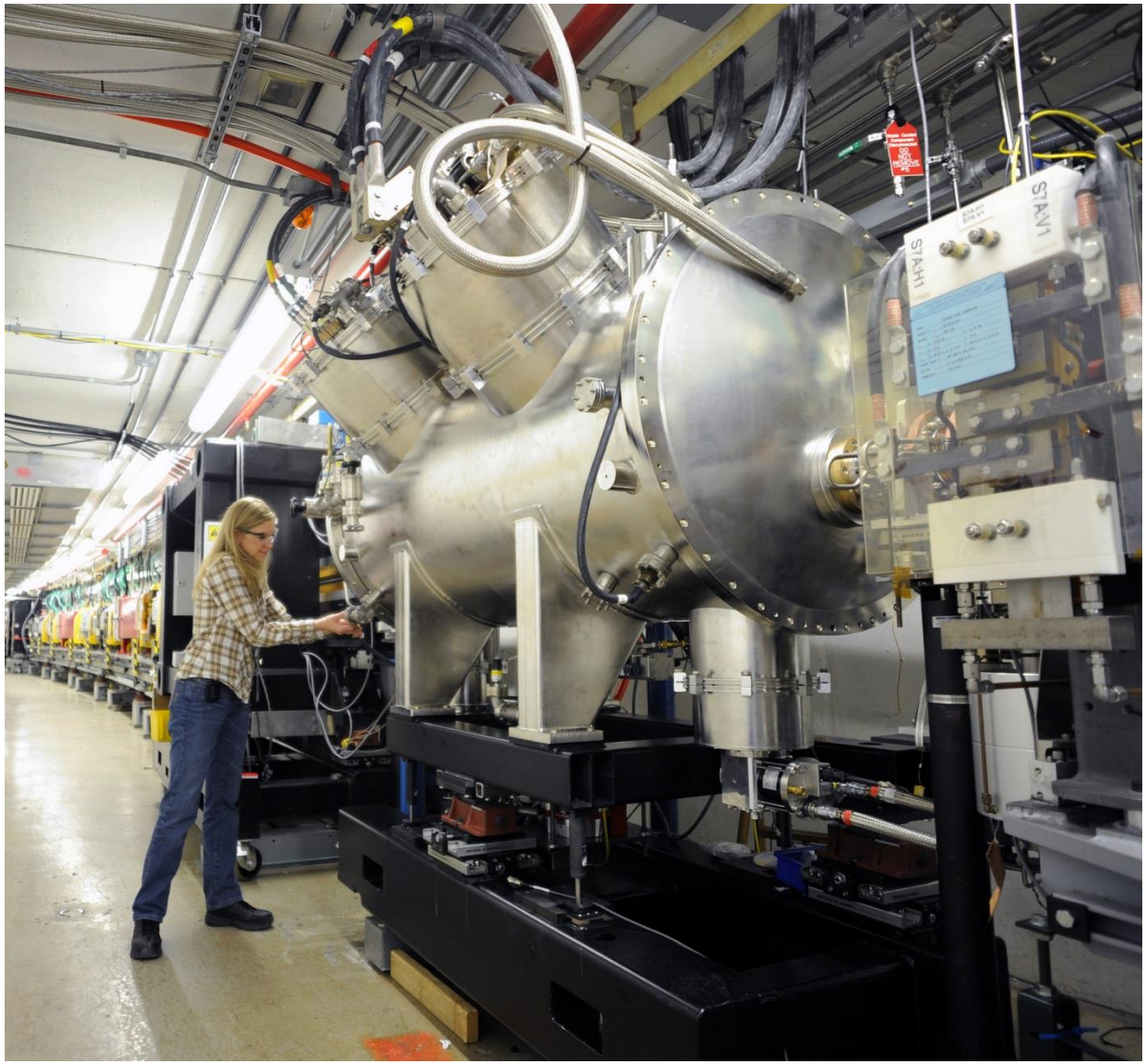

Beam-based Chamber Alignment

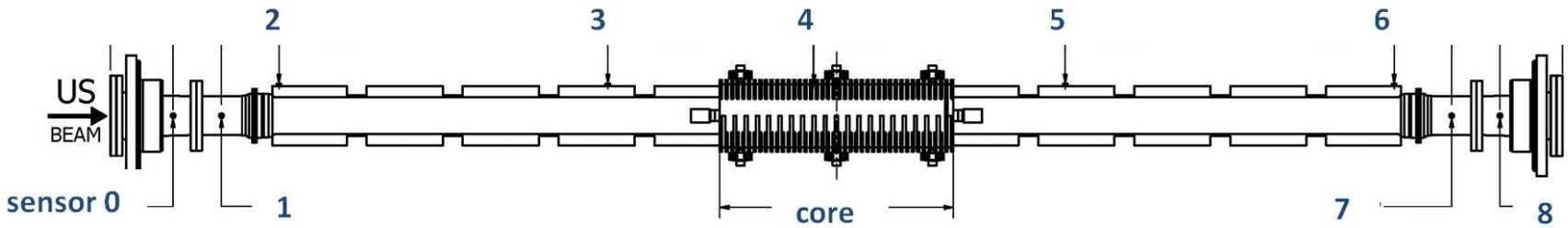

- Chamber alignment critical to protect SCU0 from excessive beam-induced heat loads.
- Novel beam-based alignment using thermal sensors mounted on the SCU0 beam chamber was developed at APS.*
- Electron beam steering vertically and thermal sensor minima determine the vertical center of the SCU0 chamber with respect to the user beam orbit with 0.100 mm accuracy.

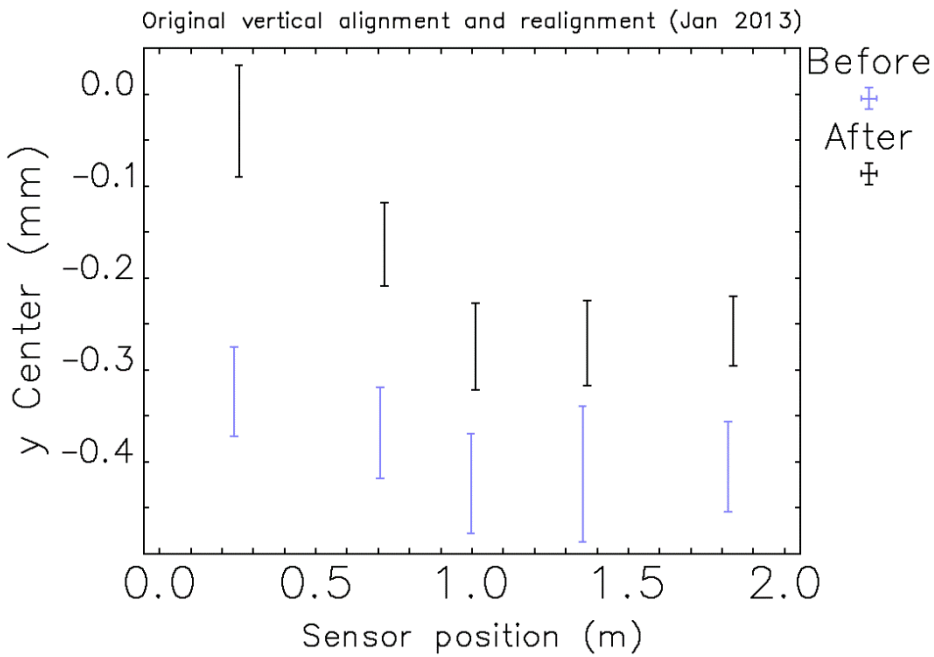

Vertical center of chamber with respect to the user beam orbit. Sensors 2-6, January 2013 data.

* K. Harkay et al.

Chamber alignment stability

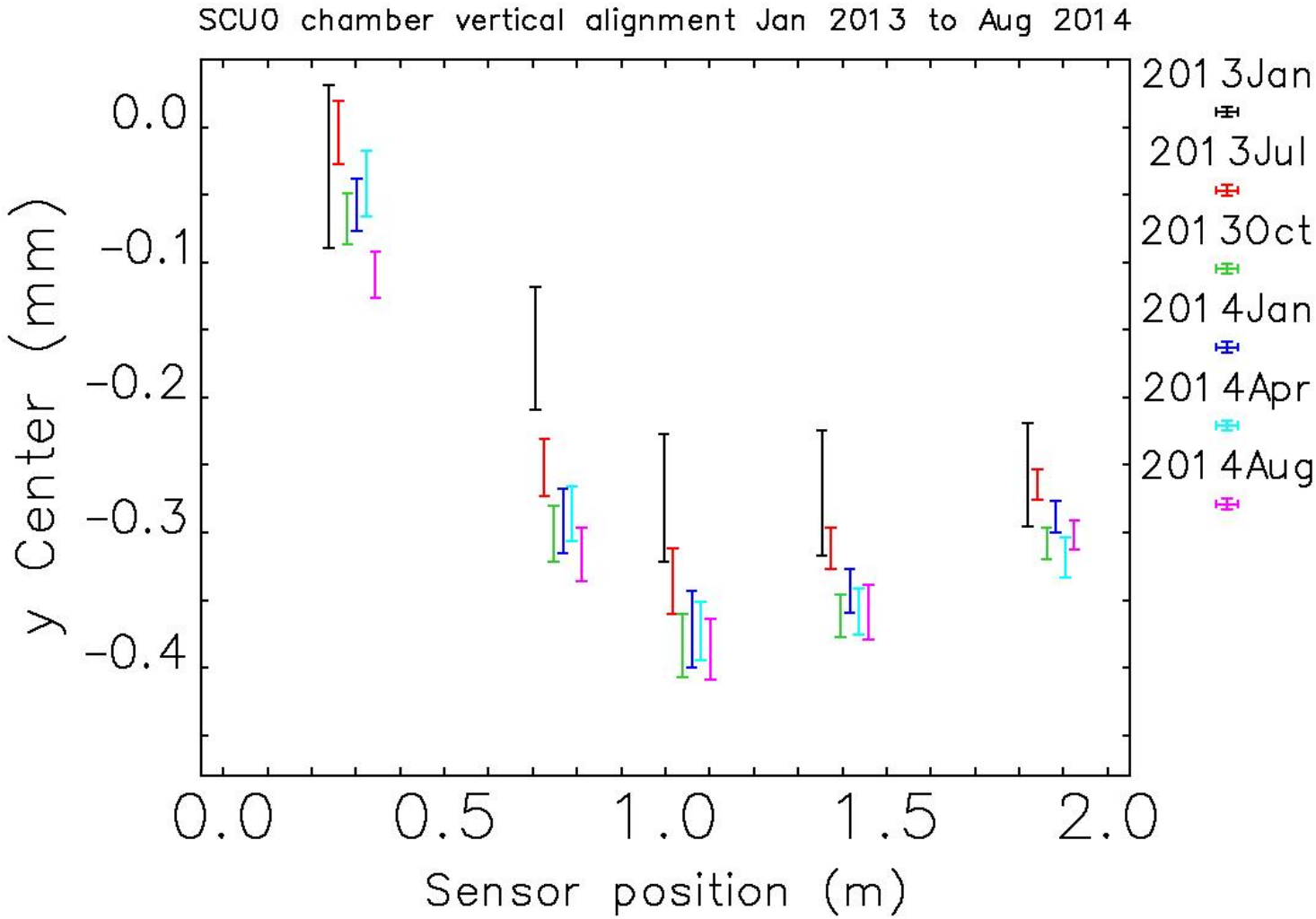

Courtesy K. Harkay

Realignment of SCU0

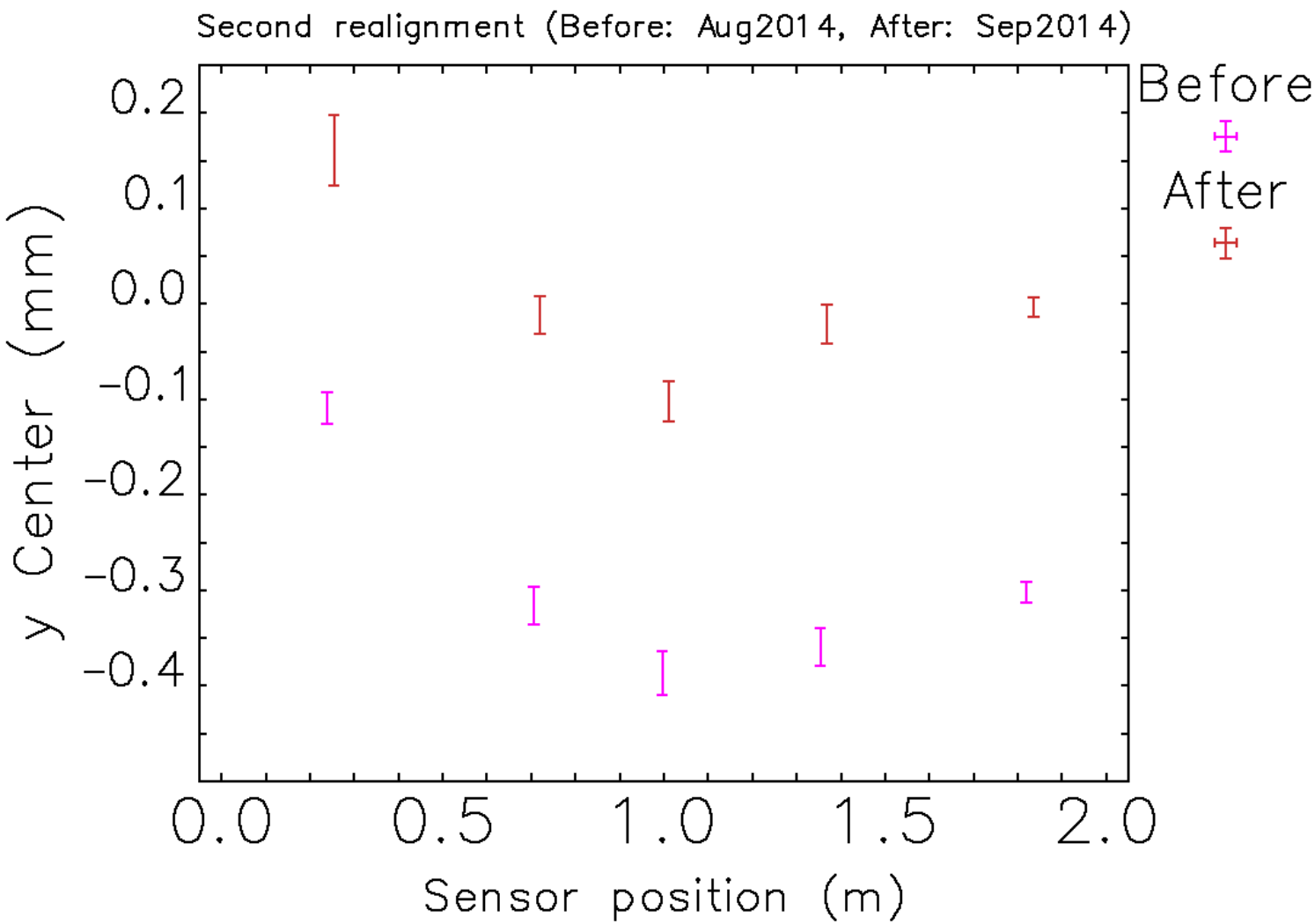

Courtesy K. Harkay

User experiments with SCU0

Diffraction pattern of 10-fold axis in new GdCd magnetic quasicrystal

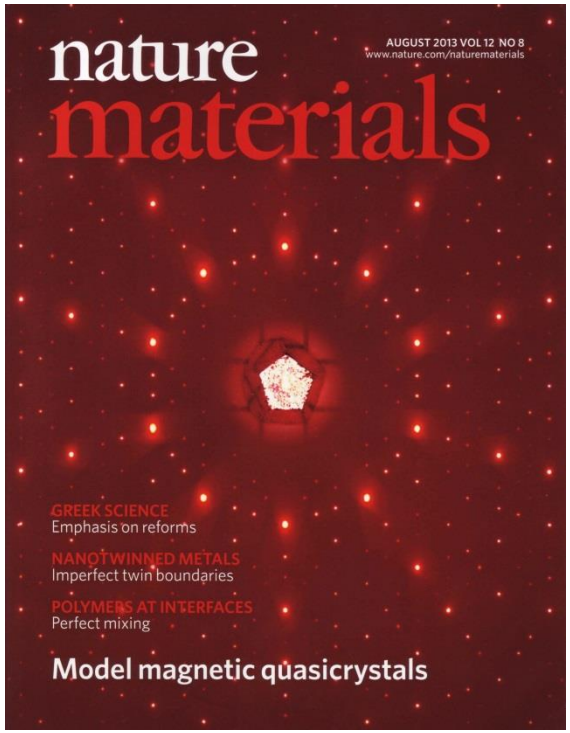

Cover image for August 2013 issue of Nature Materials features image taken with SCU0.
A. Goldman *et al., Nature Mat.* **12**, 714 (2013)

Fluorescence mapping from nuclear fuel pellets

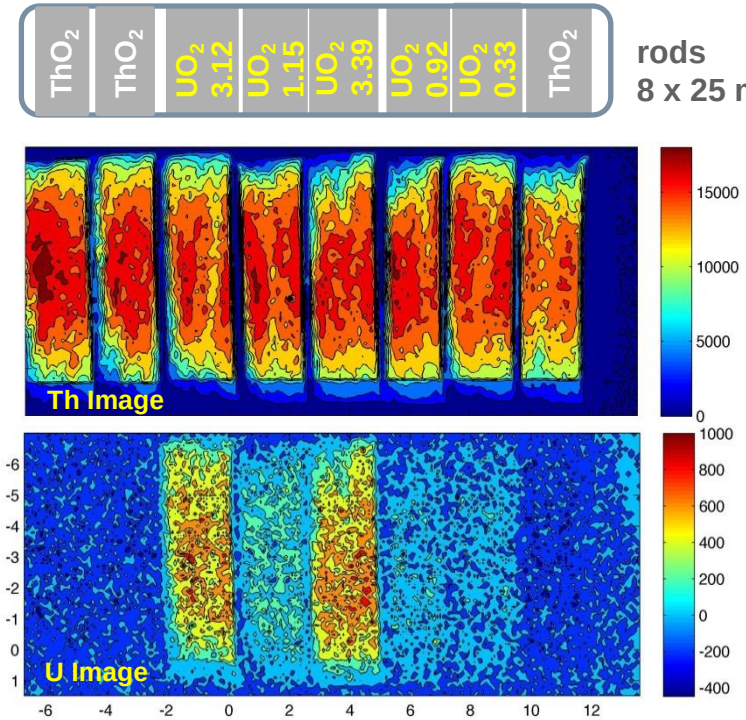

Uranium and Thorium fluorescence maps of mock fuel pellets encased in Zirconium.
G.J. Havrilla et al. to be published

SCU1 improvements for alignment

- Added beam chamber viewports.
- Permanent fiducial cups in place of bushings.
- Improved Kevlar bands (no braiding, no knots).

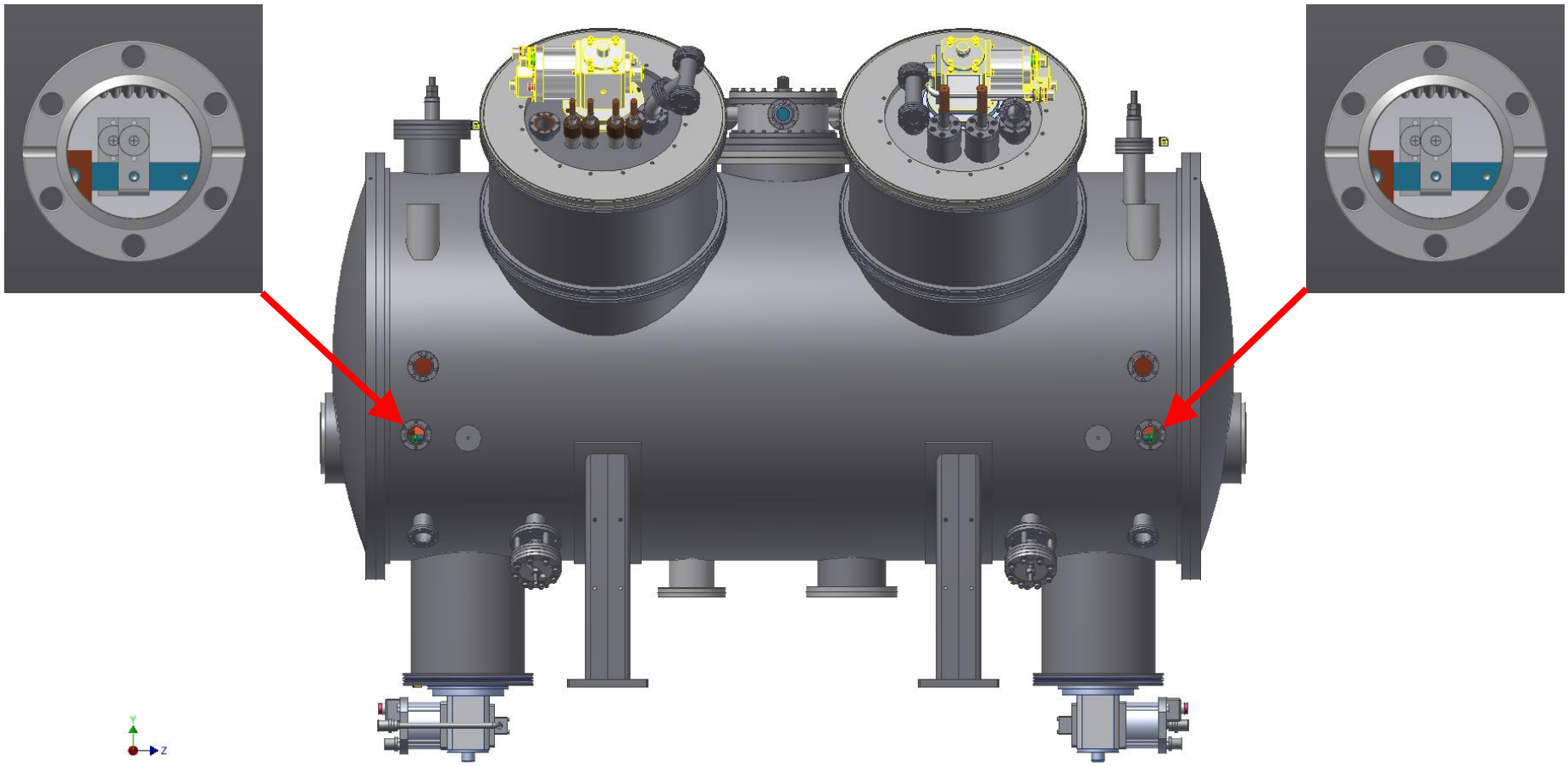

Summary

- The first prototype superconducting undulator was successfully installed and aligned in the APS storage ring and has reliably delivered 80 – 100 keV photons to APS users for the last 19 months.
- A new spherical bead target technique was implemented for quantifying thermal shift of the SCU0 beam chamber.
- A unique suspension system combining Kevlar string with aluminum links was designed to eliminate any displacement of the chamber during the cooling of the SCU0.
- A novel beam-based measurement method using thermal sensors mounted on the SCU0 beam chamber was developed for fine alignment and stability monitoring.
- Significant knowledge was gained from the SCU0 installation, and many improvements are being implemented in the assembly and alignment of the next superconducting undulator, SCU1.


感謝您的關注
Thank you for your attention