LHC AND THE ORIGIN OF NEUTRINO MASS

Goran Senjanović

ICTP

B. Bajc, G. S., 06

B.Bajc, M. Nemevšek, G. S., 07

In progress with A. Arhrib, B. Bajc, D. Ghosh, T. Han, G.-Y. Huang, I. Puljak,

With the degrees of freedom of the SM

ν masses parametrized by

Weinberg $d = 5$ effective operator

$$\mathcal{L} = Y_{ij} \frac{L_i H H L_j}{M}$$

$$\frac{v^2}{M} Y = U_{PMNS}\ m_\nu^{diag}\ U_{PMNS}^T$$

neutrino mass - Majorana

M signals the appearence of new physics

Violation of lepton number: $\Delta L = 2$

- neutrino-less double beta decay $\nu 0\beta\beta$

  a text-book fact

- same sign charged lepton pairs in colliders

Keung, G.S., 83

- If M is huge, no hope of direct observation of new physics
- $M = 10^{13} GeV - 10^{14} GeV$ corresponds to Y of order one
- However, small Yukawas are natural in a sense of being protected by symmetries.
- Keep M free and look for theoretical predictions (grand unification)

Only 3 ways of producing the Weinberg operator

By exchange of heavy

- fermion singlet $(1_C, 1_W, Y = 0)$ TYPE I SEESAW

  Minkowski, 77

  Mohapatra, Senjanović, 79

  Gell-Mann et al, 79

  Glashow, 79

  Yanagida, 79

- boson weak triplet $(1_C, 3_W, Y = 2)$ TYPE II SEESAW

  Lazarides et al, 80

  Mohapatra, Senjanović, 80

- fermion weak triplet $(1_C, 3_W, Y = 0)$ TYPE III SEESAW

  Foot et al, 86

I and II very well studied, III almost ignored in the past

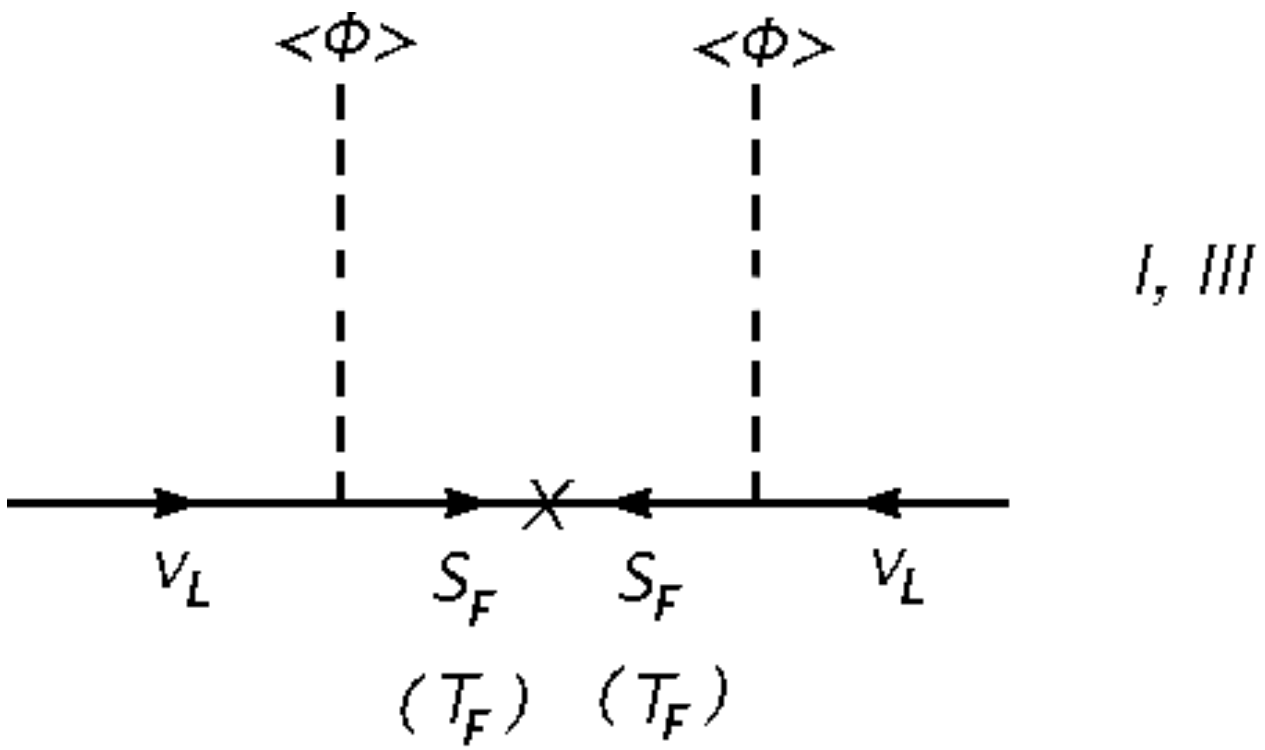

I, III

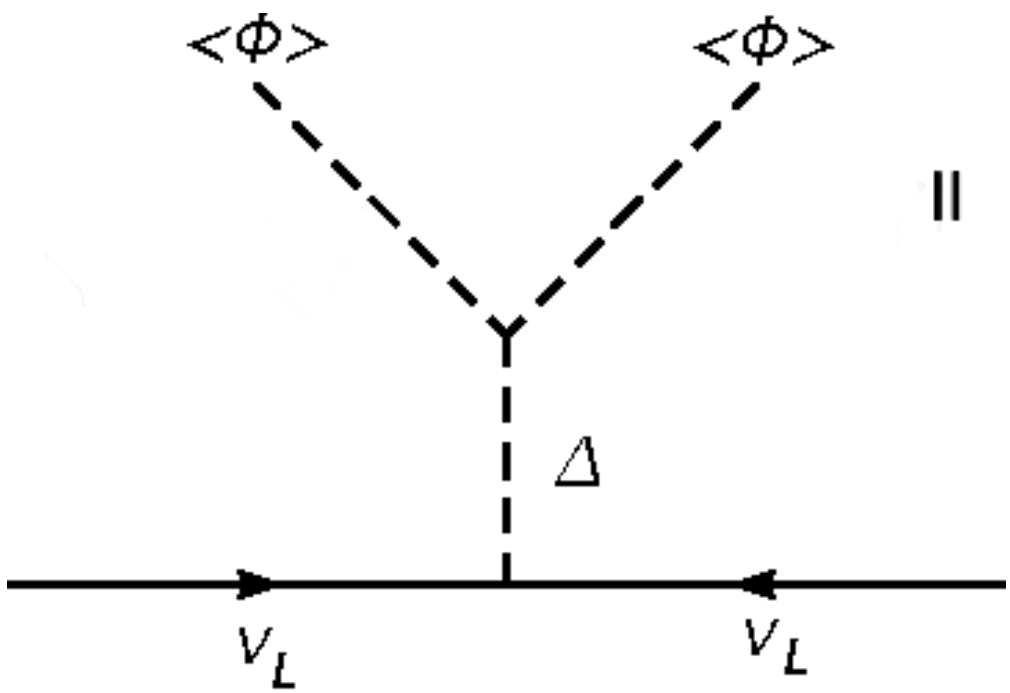
<Φ>
<Φ>
Δ
ν_L
ν_L

All this by itself not more useful than just Weinberg operator

unless

- we can reach the scale M, interesting only for low M
- we have a theory of these singlets, triplets (GUT for example)

This reminiscent of the Fermi theory of low energy weak interactions:

saying that the four fermion interactions can be described by the exchange of a new particle (W boson) not useful except

- when you can reach the new scale (M_W)
- you have a theory of this new particle: $SU(2)_L \times U(1)$ Standard Model gauge theory

  that correlates different processes at low energies $E << M_W$

ν mass window to new physics - if Majorana

- Dirac case complete - new physics not necessary
- SM with Majorana neutrino not complete
- Majorana case connects m_ν to different new phenomena like $\nu 0\beta\beta$ decay

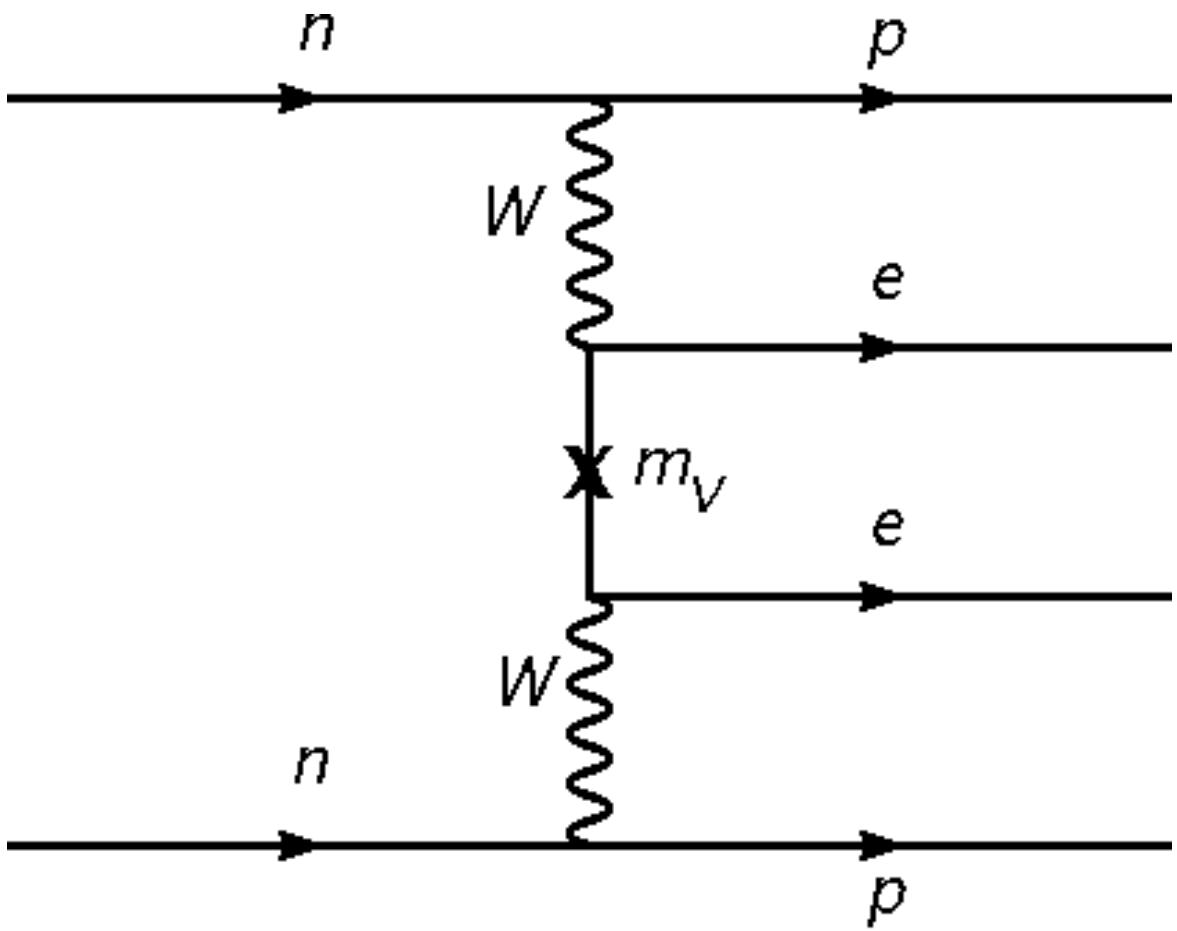
n
p
W
e
m_V
e
W
n
p

in general m_ν not directly connected to $\nu 0\beta\beta$ decay: depends on the completion

Example:

LR symmetry with low W_R, ν_R masses has a nonzero $\nu 0\beta\beta$ decay even with y_D, $m_\nu \to 0$

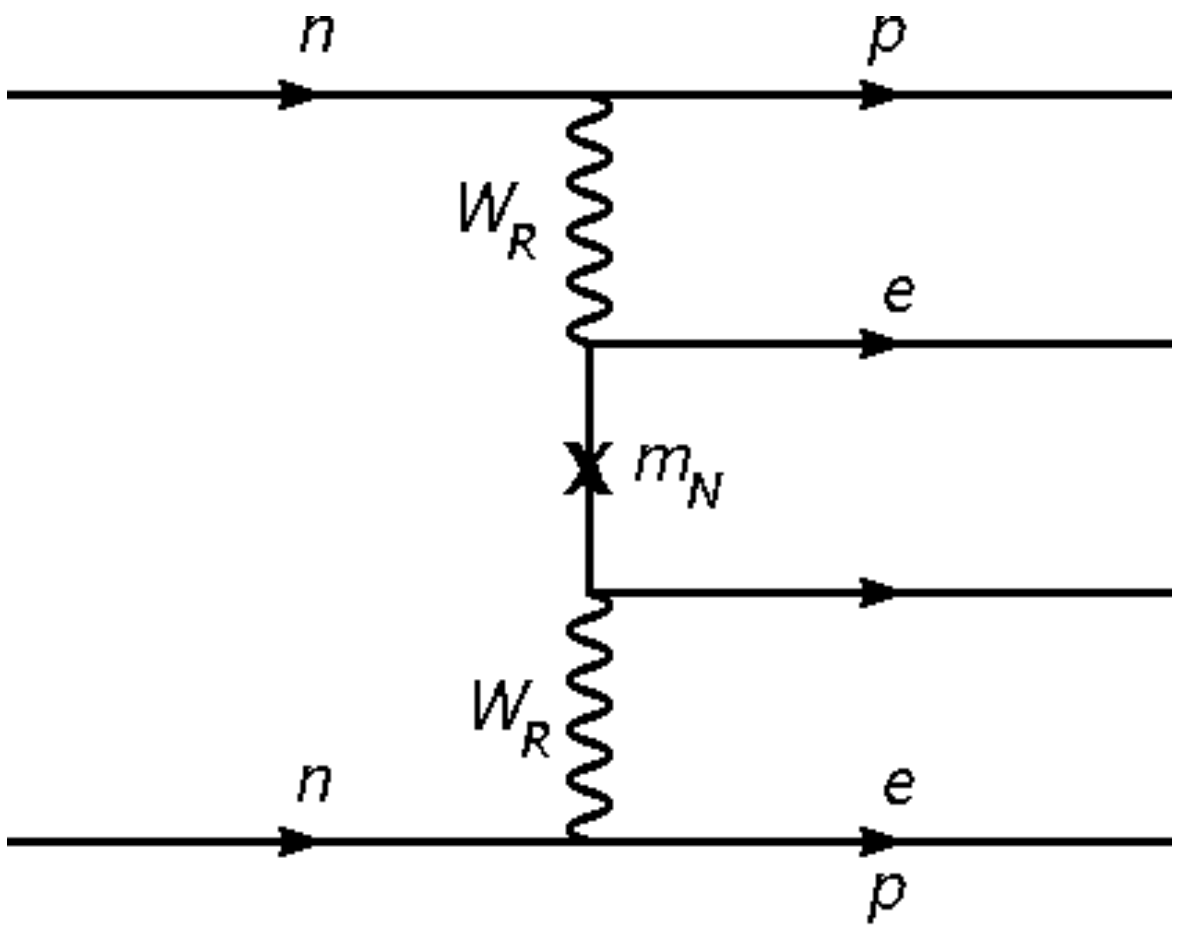
n
p
W_R
e
m_N
W_R
n
e
p

This is why it is important for the see-saw to be traced in colliders:

measure $\Delta L = 2$ operators not only in $\nu 0\beta\beta$ decays, but also in colliders

Keung, Senjanović, 83

L-R symmetric theories: $SU(2_L)\times SU(2)_R\times$U(1) gauge theory

- ν_L implies ν_R
- Type I seesaw: connects neutrino mass to scale of parity restoration
- colliders: produce W_R through Drell-Yan

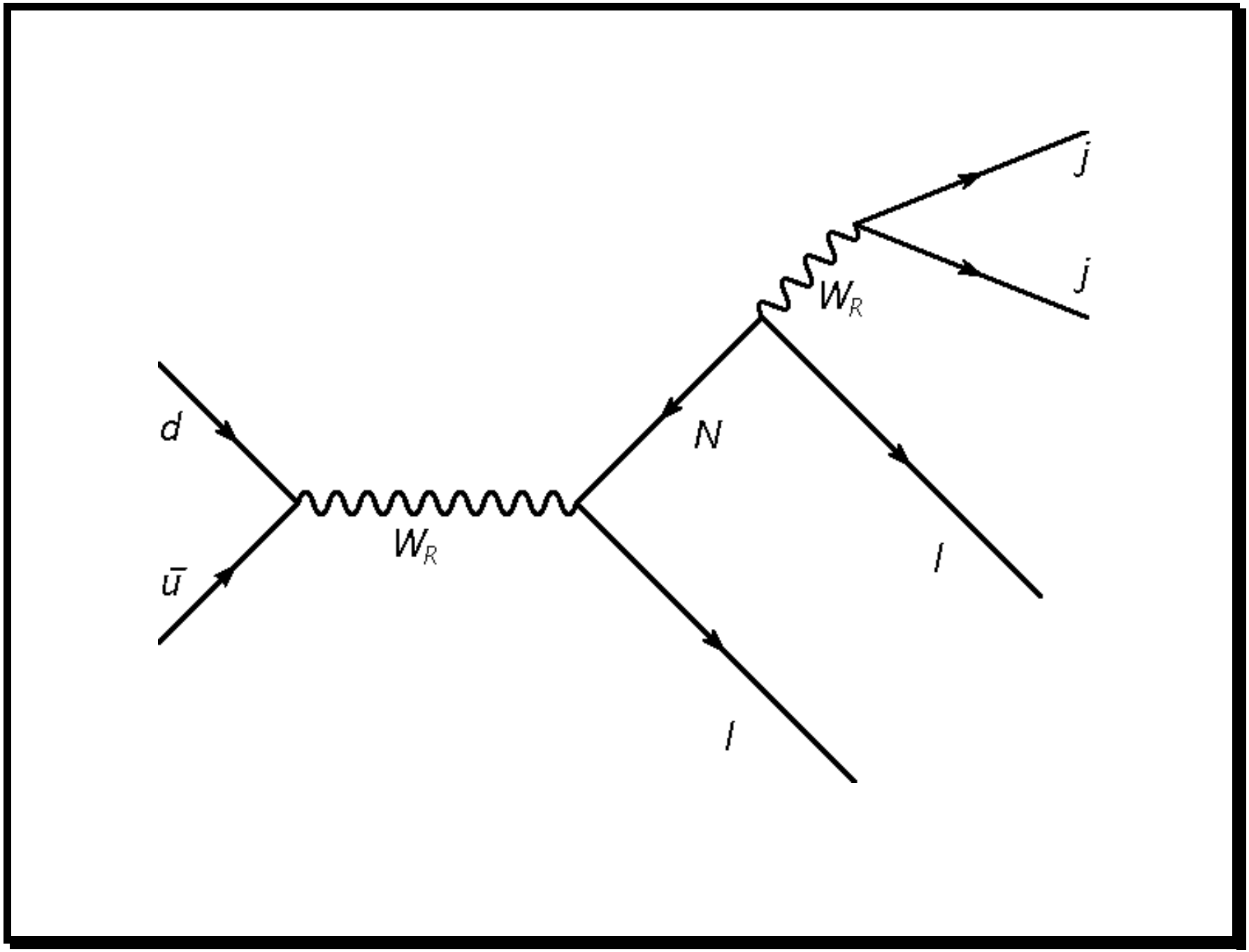
j
j
W_R
d
N
W_R
l
$\bar{u}$
l

- direct test of parity restoration
- direct test of lepton number violation
- determination of W_R and N masses

Ferrari et al, 99

Gninenko et al, 07

LHC easily probes W_R up to 3-4 TeV and ν_R in 100 - 1000 GeV

L-R theory: also type II

Type II: pair production of doubly charged Higgses, which decay into same sign lepton (anti lepton) pairs

$$M_\nu = Y_\Delta v_\Delta$$

probe directly M_ν if no type I

Kadastik, Raidal, Rebane,07 and references therein

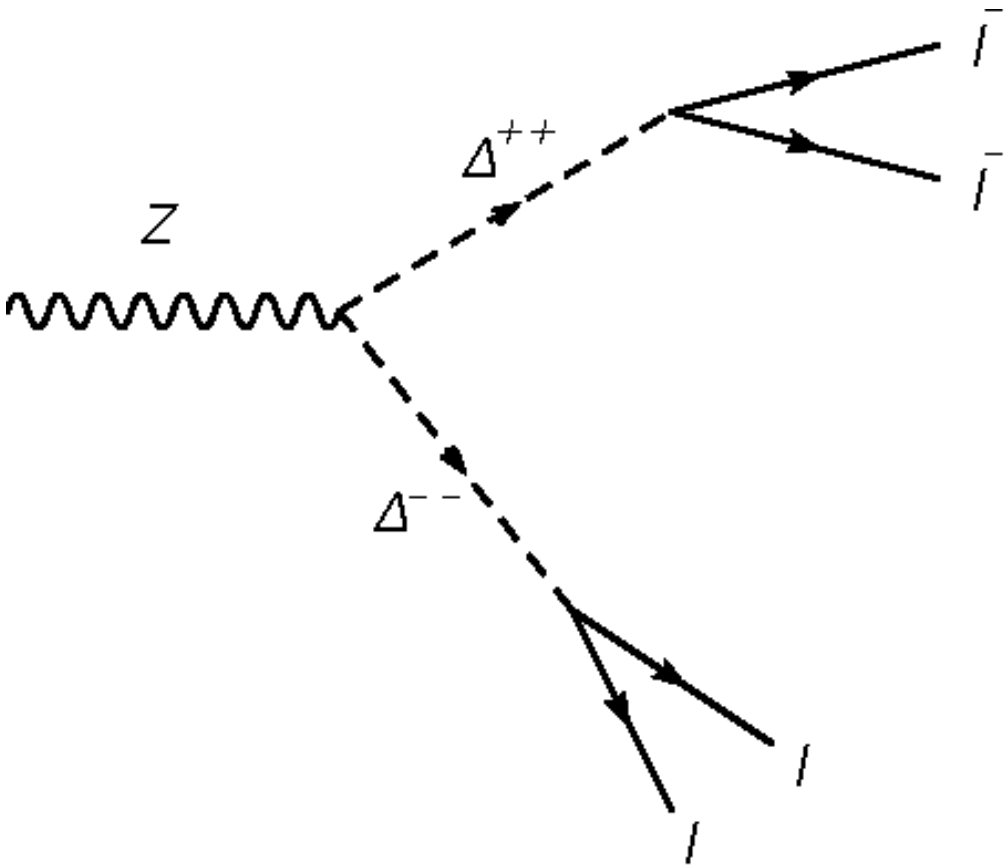
$\bar{l}$
Δ^{++}
$\bar{l}$
Z
Δ^{--}
l
l

Datta, Guchait, Pilaftsis, 93

Datta, Guchait, Roy, 93

Ferrari et al, 99

Han, Zhang, 06

Gninenko et al, 07

del Aguila, Aguilar-Saveedra, Pittau, 07

del Aguila, Aguilar-Saveedra, 07

Han et al, 07

Akeroyd, Aoki, Sugiyama, 07

Fileviez Perez et al, 07

Kadastik, Raidal, Rebane,07

Kersten and Smirnov, 07

Chao et al, 08

Franceschini, Hambye, Strumia, 08

Fileviez Perez et al, 08

many more in type I and also type II

Interesting theories:

$$m_{Dirac} \ll M_{\nu_R} \quad \text{(see-saw)}$$

$$M_{\nu_R},\, M_{W_R} \sim \mathcal{O}(1-10)\ \text{TeV}$$

Handle on a see-saw scale form grand unification : SO(10) theory

- SO(10) unifies a family of fermions and postulates right-handed neutrinos
- has L-R symmetry in a form of charge conjugation of Dirac
- naturally both type I and II seesaw

- usually no low scale from running
- typically $Y_{Dirac} \sim Y_{top}$: fits with $M_R \sim 10^{14} GeV$

Such theories have a natural see-saw mechanism

(m_ν and $\nu 0\beta\beta$ well described)

but no low see-saw scale

(no $\Delta L = 2$ in colliders)

Take for example the SO(10) model with Yukawas

$$\mathcal{L}_Y = 16_F^i \left(Y_{10}^{ij} 10_H + Y_{126}^{ij} 126_H \right) 16_F^j$$

Lazarides, Shafi, Wetterich, 81

Babu, Mohapatra, 92

Bajc, Senjanović, Vissani, 02

Only two 3×3 symmetricYukawa matrices

Y_{10} and Y_{126}

to describe all light fermions (m_d, m_u, m_e, m_ν)

Full theory with such Yukawas for example in the minimal renormalizable supersymmetric SO(10):

- three copies of 16_F
- 210_H, 126_H, $\overline{126}_H$, 10_H

Clark, Kuo, Nakagawa, 83

Aulakh, Mohapatra, 83

Aulakh, Bajc, Melfo, Senjanović, Vissani, 04

The theory over constrained and quite predictive

Some evidence that constraints from Higgs sector and Yukawa sector are in contradiction

Aulakh, 05, 06

Bajc, Melfo, Senjanović, Vissani, 05

Bertolini, Malinsky, Schwetz, 06

Although some new hope for consistent fit comes from recent (yet unpublished) results

Doršner, Nemevšek, to appear

possibility: relate proton decay branching ratios to neutrino masses and mixings.

Even with new physics - only indirect

Simple predictive GUT candidate with measurable seesaw?

MINIMAL SU(5)

The minimal Georgi-Glashow model ruled out because

Minimal: $24_H + 5_H + 3(10_F + \overline{5}_F)$

1. gauge couplings do not unify
   - 2 and 3 meet at 10^{16} GeV (as in susy),
   - but 1 meets 2 too early at $\approx 10^{13}$ GeV
2. neutrinos massless (as in the SM)

Add just one extra fermionic 24_F

New Yukawa terms (higher dimensional operators a must as in the minimal model)

$$\mathcal{L}_{Y\nu} = y_0^i \bar{5}_F^i 24_F 5_H + \frac{1}{\Lambda} \bar{5}_F^i \left(y_1^i 24_F 24_H + ... \right) 5_H + h.c.$$

Under $\mathrm{SU}(3)_C \times \mathrm{SU}(2)_W \times \mathrm{U}(1)_Y$ decomposition

$$24_F = (1,1)_0 + (1,3)_0 + (8,1)_0 + (3,2)_{5/6} + (\bar{3},2)_{-5/6}$$

singlet $S = (1,1)_0$
triplet $T = (1,3)_0$

$$\mathcal{L}_{Y\nu} = L_i \left(y_T^i T + y_S^i S \right) H + h.c.$$

Mixed Type I and Type III seesaw:

$$(M_\nu)^{ij} = v^2 \left(\frac{y_T^i y_T^j}{m_T} + \frac{y_S^i y_S^j}{m_S} \right)$$

$\rightarrow$ one massless neutrino

The only possible pattern:

$$m_3 \ll m_8 \ll m_{(3,2)} \ll M_{GUT}$$

A solution

$$m_3 = 10^2 \text{GeV}$$
$$m_8 = 10^7 \text{GeV}$$
$$m_{(3,2)} = 10^{14} \text{GeV}$$
$$M_{GUT} = 10^{16} \text{GeV}$$

1-loop result:

For $M_{GUT} \gtrsim 10^{15.5}$ GeV (p decay)

$\rightarrow m_3 \lesssim 1\text{TeV}$

Prediction of the model

$m_3^{max} - M_{GUT}$ at two loops

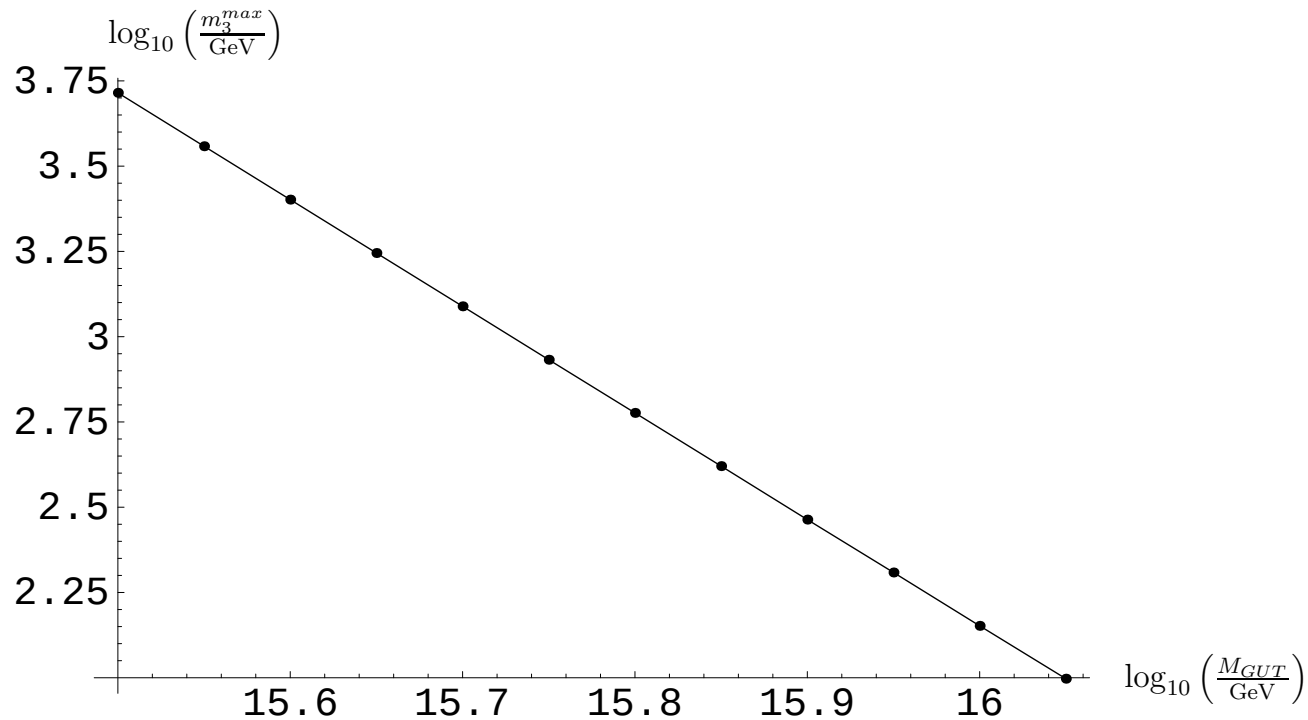

T at LHC ?

$T^{0,\pm}$ weak triplet

$\rightarrow$ produced through gauge interactions (Drell-Yan)

$$pp \rightarrow W^{\pm} + X \rightarrow T^{\pm}T^{0} + X$$
$$pp \rightarrow (Z \,\mathrm{or}\, \gamma) + X \rightarrow T^{+}T^{-} + X$$

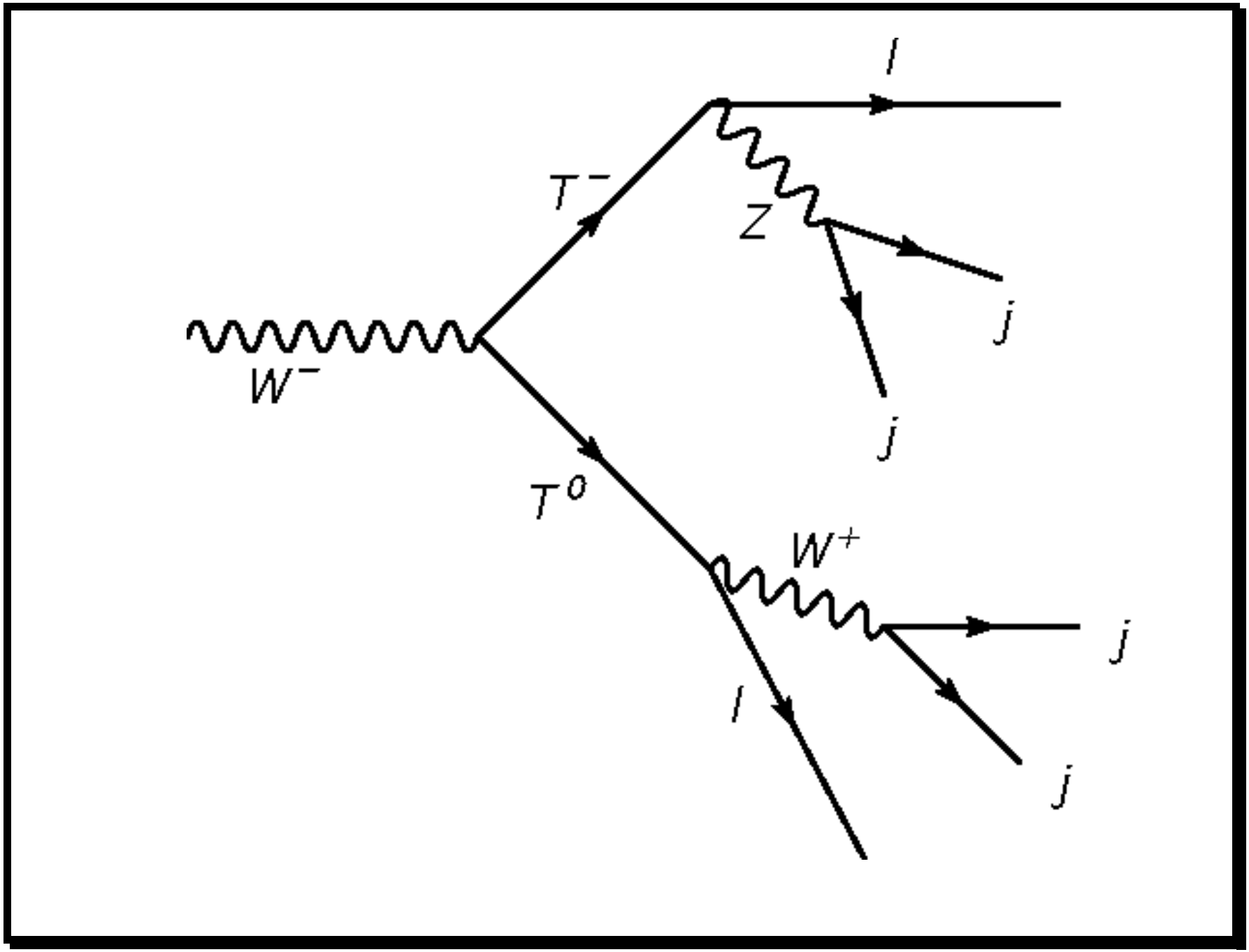
l
T⁻
Z
j
W⁻
j
T⁰
W⁺
j
l
j

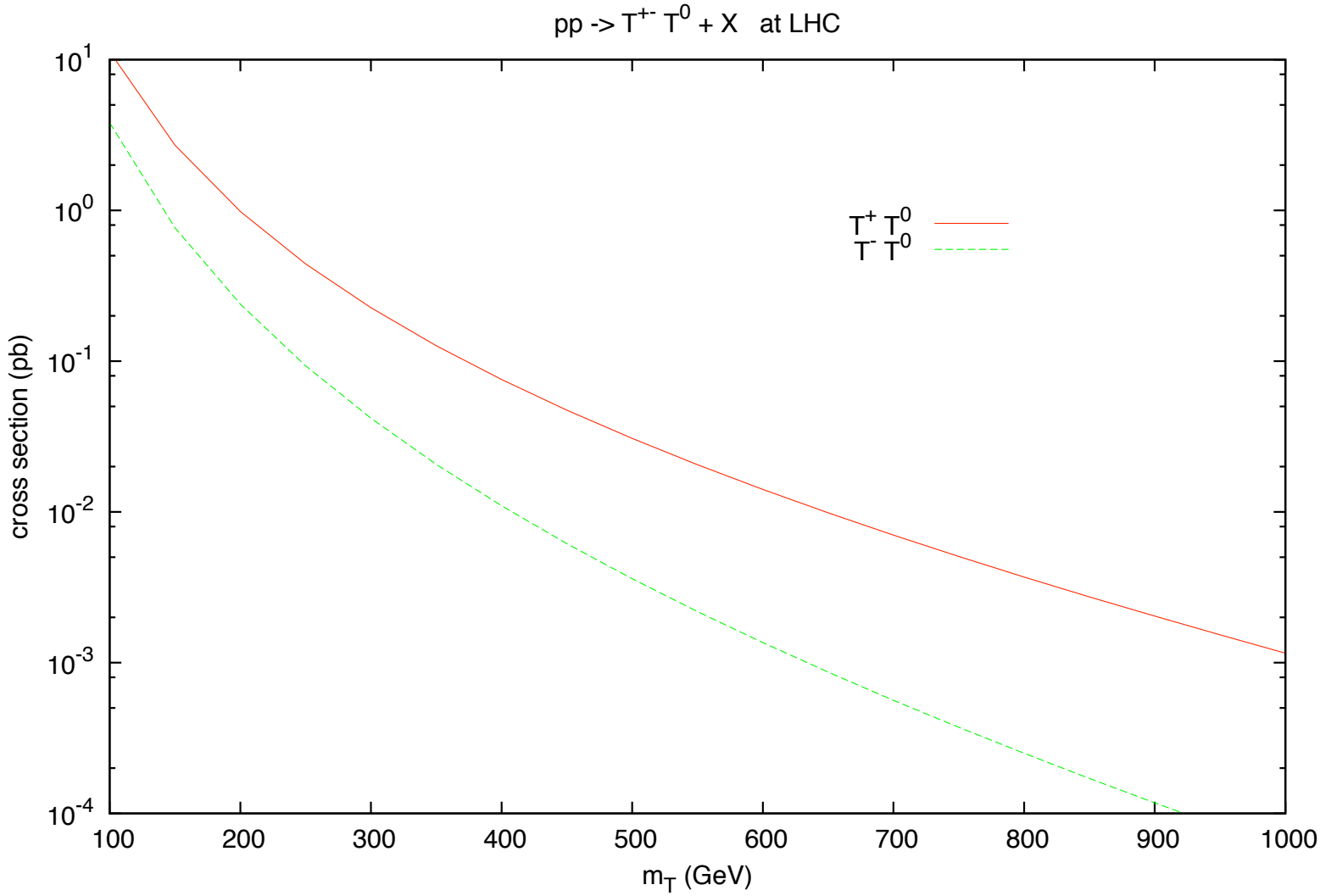
pp -> T+- T0 + X at LHC
cross section (pb)
mT (GeV)
T+ T0
T- T0
10^1
10^0
10^-1
10^-2
10^-3
10^-4
100
200
300
400
500
600
700
800
900
1000

$$\Gamma_T \approx m_T |y_T|^2$$

The best channel is like-sign dileptons + jets

$$BR(T^{\pm}T^0 \to l_i^{\pm} l_j^{\pm} + 4 \text{ jets}) \approx \frac{1}{20} \times \frac{|y_T^i|^2 |y_T^j|^2}{(\sum_k |y_T^k|^2)^2}$$

Same couplings y_T^i contribute to

- ν mass matrix and
- T decays

Normal hierarchy:

$$\frac{v y_T^{i*}}{\sqrt{2}} = i\sqrt{m_T}\left(U_{i2}\sqrt{m_2^\nu}\cos z \pm U_{i3}\sqrt{m_3^\nu}\sin z\right)$$

Inverse hierarchy:

$$\frac{v y_T^{i*}}{\sqrt{2}} = i\sqrt{m_T}\left(U_{i1}\sqrt{m_1^\nu}\cos z \pm U_{i2}\sqrt{m_2^\nu}\sin z\right)$$

U = PMNS matrix, z = arbitrary complex number

Ibarra, Ross, 03

Measuring T decays $\rightarrow$ constraints on z (θ_{13}, phases)

exp. limit: $m_T \gtrsim m_Z$

Total decay width of $T^{\pm}$, T^0

$$\Gamma_T = \frac{m_T}{32\pi}\left(\sum_k \left|y_T^k\right|^2\right)\left[2f_1\left(\frac{m_W}{m_T}\right) + f_1\left(\frac{m_Z}{m_T}\right) + f_0\left(\frac{m_H}{m_T}\right)\right]$$

$$f_n(x) = (1-x^2)^2(1+2nx)$$

From the general parametrization above

$$\sum_k \left|y_T^k\right|^2 \geq \frac{m_T}{v^2}\sqrt{\Delta m_S^2} \qquad \text{(normal hierarchy)}$$

$$\sum_k \left|y_T^k\right|^2 \geq \frac{m_T}{v^2}\sqrt{\Delta m_A^2} \qquad \text{(inverse hierarchy)}$$

Upper limit on total triplet lifetime

$$\tau_T \lesssim 2 \left(\frac{100 \text{ GeV}}{m_T} \right)^2 \text{ mm} \qquad \text{(normal hierarchy)}$$

(and $\sqrt{\Delta m_A^2 / \Delta m_S^2} \approx 5$ times smaller for inverse hiearchy)

Measure lifetime?

But should be easier to measure

- slower decay modes
- branching ratios

$|y_T^k|$ from $\tau(T \to l_k jj)$ are partially correlated (connected by unknown complex z and not yet measured θ_{13} and phases δ, Φ in U_{PMNS})

Scanning over whole parameter space

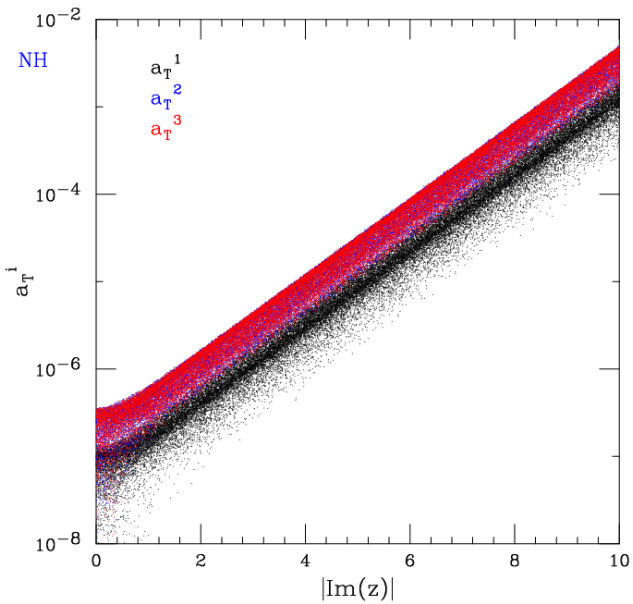

normal hierarchy

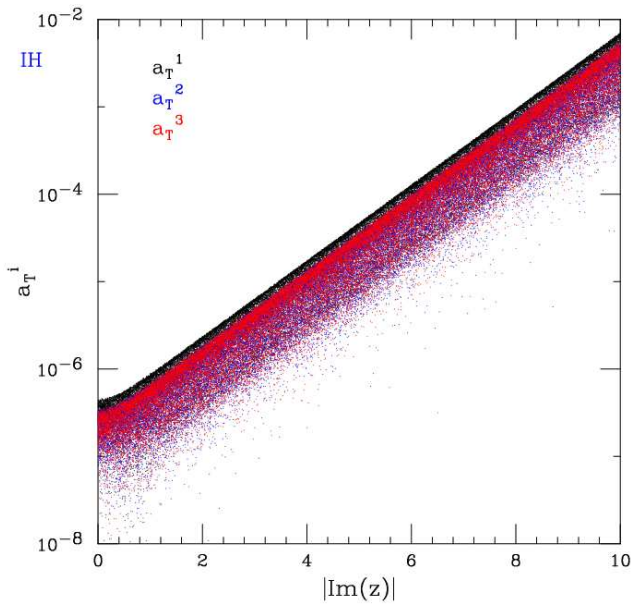

inverse hierarchy

Assuming Majorana phase $\Phi = 0$

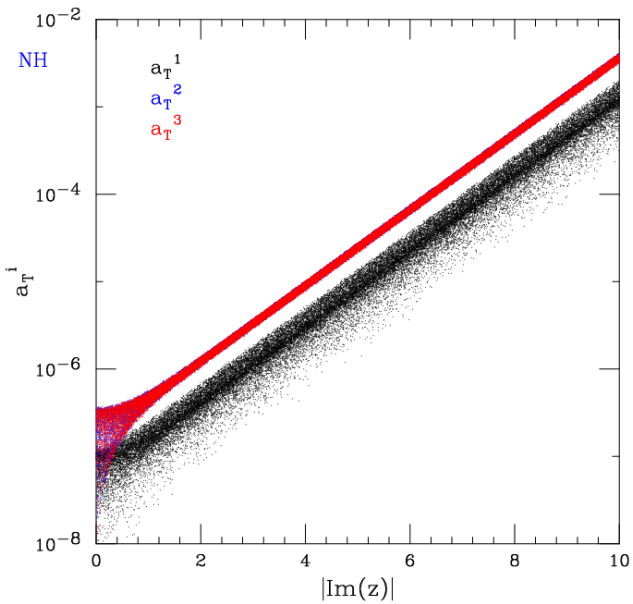

normal hierarchy

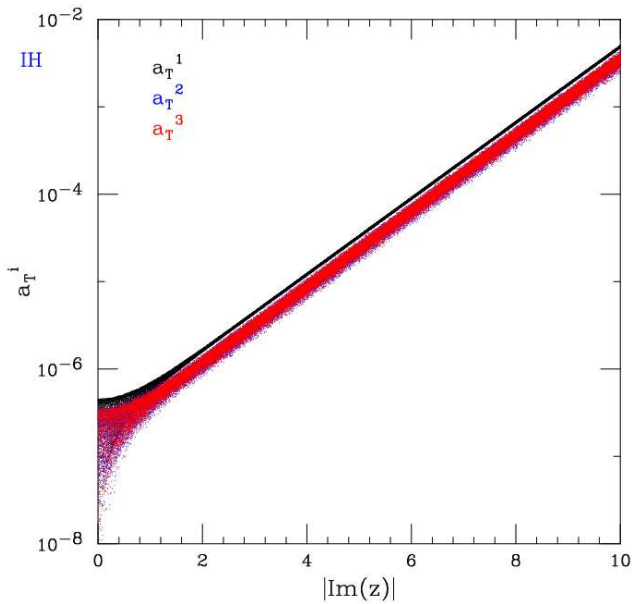

inverse hierarchy

SM background:

in ideal detectors is 0 (no $\Delta L = 2$ in SM)

But real life not ideal

Background mainly from

- $t\bar{t}nj$:

$$\begin{aligned} t &\rightarrow W^+ b \\ \bar{t} &\rightarrow W^-(\bar{b} \rightarrow W^+ \bar{q}) \end{aligned}$$

- $b\bar{b}nj$:

$$\begin{aligned} b &\rightarrow W^-(q \rightarrow W^+ q') \\ \bar{b} &\rightarrow W^+ \bar{q}'' \end{aligned}$$

$W^+ \rightarrow l^+\nu$ produce final states $\rightarrow l^+l^+4j+$ missing energy

Cross sections huge (QCD), but phase space fortunately small

- neutrinos must carry small transverse energy
- a lepton and two jets near a hypothetical m_T

Other important non-QCD modes

- W^+W^+nj
- W^+Znj

$$Z \quad \rightarrow \quad q(\bar{q} \rightarrow W^+\bar{q}')$$

Some estimates:

with just very loose cuts: $\sigma_{background} \approx \mathcal{O}(10 - 100)$ fb

Different for different final states (e^+, μ^+ or τ^+)

Del Aguila, Aguilar-Saavedra, 07

Seems under control ($\sigma_{background} \lesssim 1$ fb) with better cuts

Franceschini, Hambye, Strumia, 08

Cuts in general influence the signal as well

Incremental increase of cuts on the signal ($m_T = 400$ GeV):

$\sigma_{signal} = 34.37$ fb without any cuts

Cuts $\Downarrow$	$\sigma_{\text{sig.}}$(fb)
$p_T(\ell) > 30$(GeV)	33.50
$p_T(jets) > 20$ (GeV)	21.96
$\mid \eta(\ell) \mid < 2.5$	19.68
$\mid \eta(jets) \mid < 3$	18.57
$\Delta R_{\ell\ell} > 0.3$	18.42
$\Delta R_{\ell j} > 0.4$	17.20
$\Delta R_{jj} > 0.7$	7.33

Arhrib, Bajc, Ghosh, Han, Huang, Puljak, Senjanović, to appear

Conclusions

- experimental probe of (Majorana) neutrino mass origin: lepton number violation at LHC (same sign dileptons), a high energy analogue of neutrino-less double beta decay
- an explicit example of predictive GUT theory: ordinary minimal SU(5) with extra fermionic adjoint
- weak fermionic triplet predicted in the TeV range (type III)
- its decay connected with neutrino mass
- good chances to find it at LHC
- possible even to get information on unmeasured neutrino parameters

R measures separations

$$R = [(\Delta\phi)^2 + (\Delta\eta)^2]^{1/2}$$

where $\Delta\phi$ and $\Delta\eta$ are the azimuthal angular separation and (pseudo) rapidity difference between two particles