Study on the Excavation of the Hyper-KAMIOKANDE Cavern at Kamioka Mine in Japan

Tetsuo Nakagawa

Mitsui Mining & Smelting Co., Ltd. (MITSUI KINZOKU), Tokyo, Japan

Kamioka Mining & Smelting Co., Ltd. (Kamioka Mine)
is a wholly owned subsidiary of MITSUI KINZOKU.

NNN05 Aussois, Savoie, France 7-9 April 2005

Study on the Excavation of the Hyper-KAMIOKANDE Cavern at Kamioka Mine in Japan

MITSUI KINZOKU

Topics

- **Brief Introduction of Kamioka Mine** (Present Situation)
  - Post "Ag, Pb, Zn Mine" Activities, Environmental Remediation Measures & Recycle Smelting etc.
  - Underground Utilization Projects, Kamioka Mine will Further Revive and Survive.

- **Ongoing Investigation and Feasibility Study on the Excavation of the Megaton Size Hyper-KAMIOKANDE Cavern at Kamioka Mine**

Kamioka Mine Location in Japan

MITSUI KINZOKU

Kamioka Mine Main Office

Kamioka Smelting Plant

Kamioka Mine Geological Map

MOZUMI Mine

Atotsu Entrance to Super-K

TOCHIBORA Mine

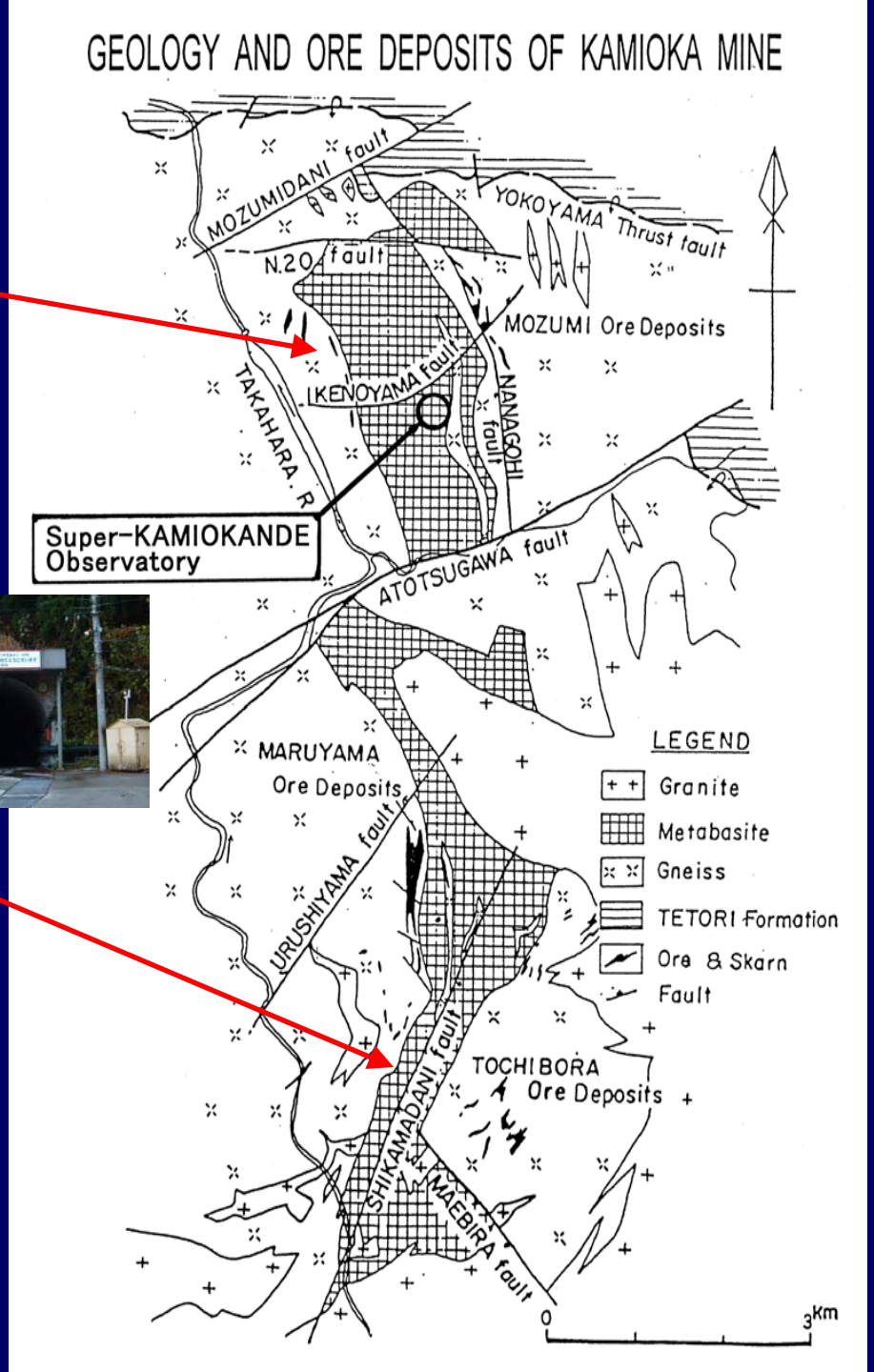

MITSUI KINZOKU

Existing Largest Cavern at TOCHIBORA Mine

MITSUI KINZOKU

Cavern Size
and Location

- Volume
  300,000m^3
- Width 80m
- Length 50m
- Height 75m
- Overburden
  (Subsurface Depth)
  330m

#10 Zinc Orebody Excavated over 20 Years Ago by Large Scale Sub-Level Open Stoping

Kamioka Mine & Pb-Zn-Ag Smelting Plant - Product Line Up

Zn Smelter

: Zn Conc. Supplied from Overseas Mines

99.99% Zn

Pb Recycling Smelter: Scraps of

- Pb Batteries
- Electronics Devices

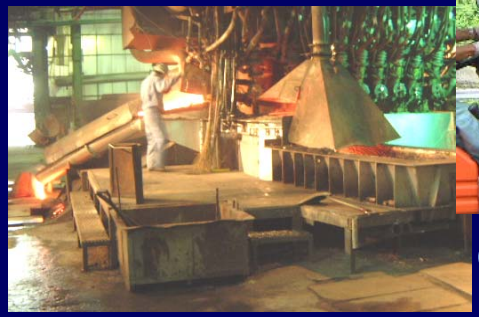

99.99% Pb

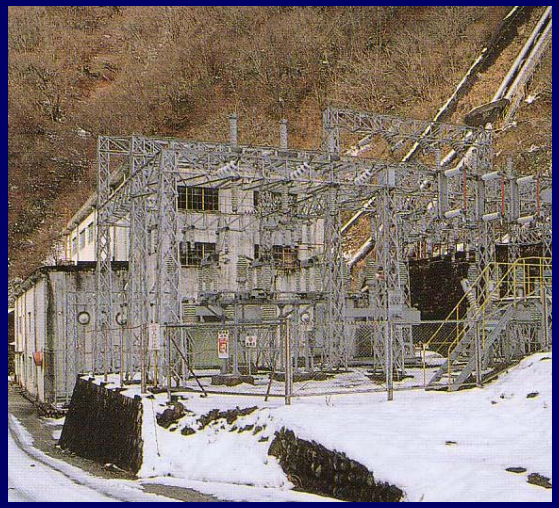

Hydroelectric Power Generator

: Operated & Owned by Kamioka Mine, attaining Very Low Energy Cost in Smelting & Manufacturing

Precious Metals & Ag Refinery

: Post Process of Pb Recycling Smelter

Small Size Lime Stone Production

has been tried and tested for supplying Flux Material

to the Furnace of Kamioka Pb Recycling Smelter.

(after Pb-Zn-Ag U/G Mine Closure in June, 200

MITSUI KINZ

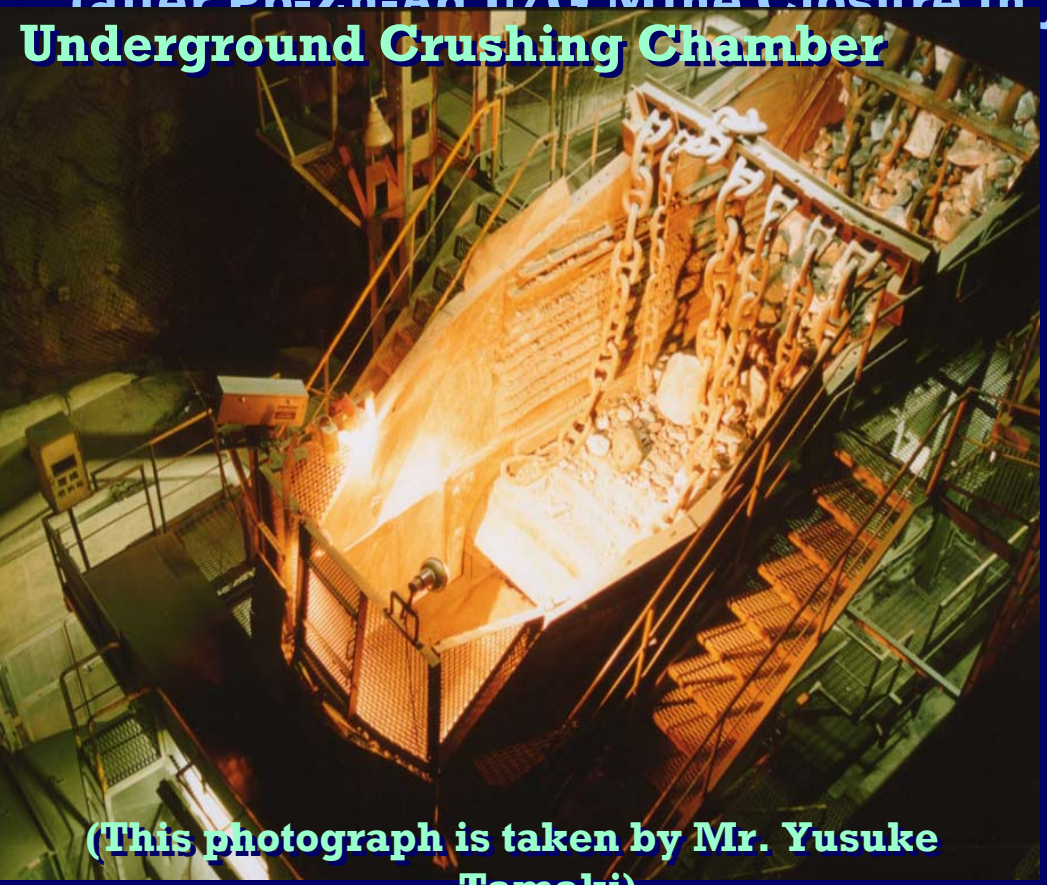

Underground Crushing Chamber

(This photograph is taken by Mr. Yusuke Tamaki)

Underground Machine Maintenance Workshop

1.2 km long Haulage Conveyor

Various Mining Infrastructures are fully utilized in the Post-Mining Activities

Post “Pb-Zn-Ag, Mine” - Environmental Remediation Activities

Waste Dam Revegetation
- Masutani, Mozumi Mine

Open Pit Rehabilitation
- Top of Tochibora Mine

Tailing Dam Revegetation
- Wasabo, Tochibora Mine

Emergency Drainage Tunnel drifting - for both Waste Tailing Dams at Mozumi & Tochibora Mine

Following Mine Safety Laws & Regulations

Underground Space Utilization Business at Kamioka Mine

Blasting Experiment Site
for Various Engineering Purposes

Under-Water Blasting - U/G Pond

Unconfined Blasting Chamber

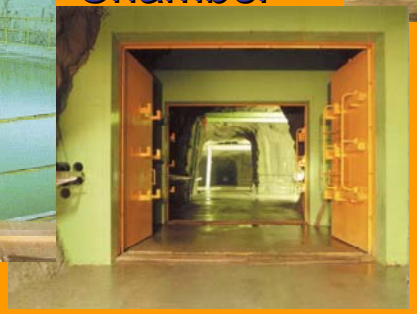

Blasting Test Tunnel - 500m Long

CAES (Compressed Air Energy Storage Experiment)

Rock Engineering Test Site

Depressurized Room for Sports Science Tests
(Simulated High Altitude Physical Training Room)

MITSUI KI

Underground Space Utilization Business at Kamioka Mine

Super-KAMIOKANDE Observatory
(Photo by the Courtesy of ICRR, U-Tokyo)

KAMLAND Observatory
(Photo by the Courtesy of Tohoku Univ.)

Gravitational Wave Observatory
(Photo by the Courtesy of ICRR, U-Tokyo)

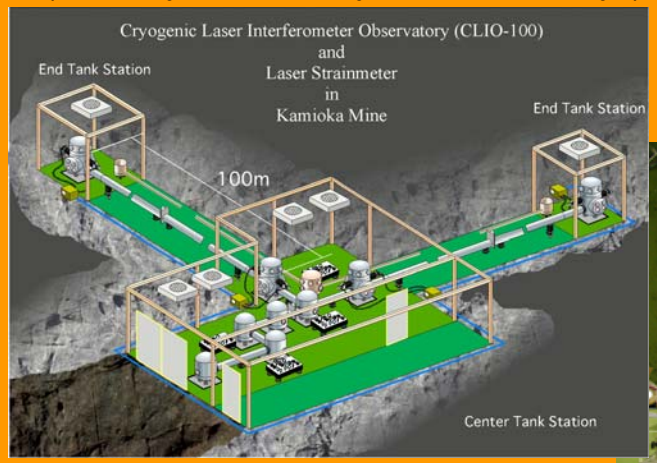

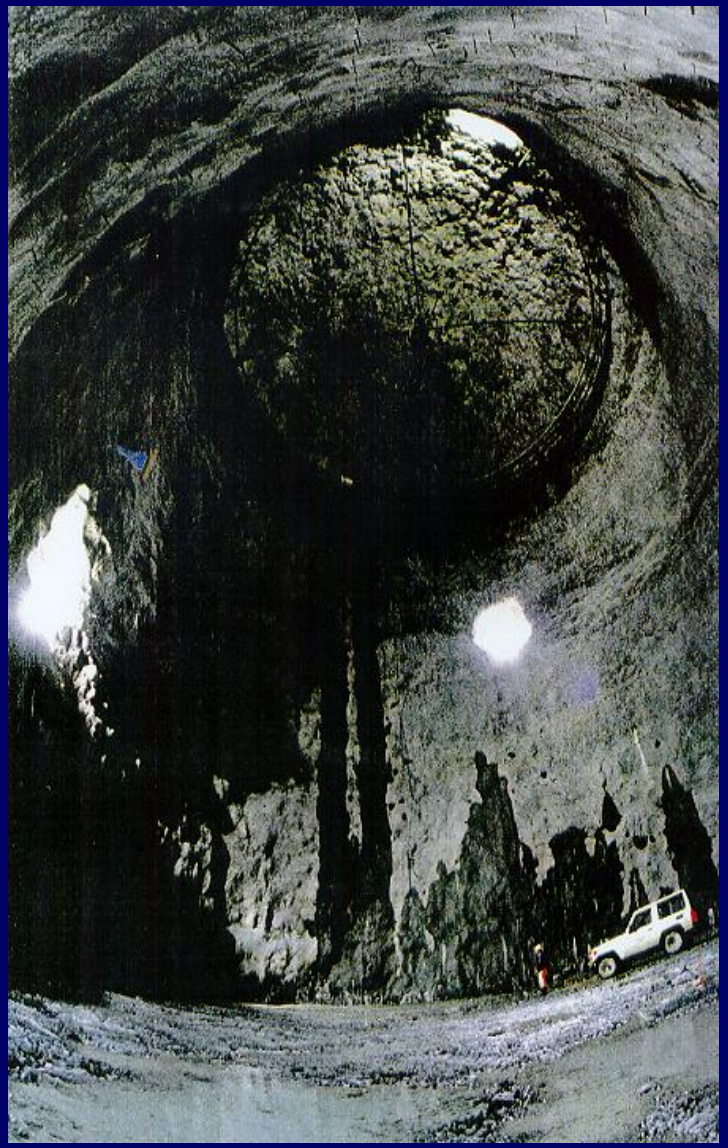

Super-KAMIOKANDE Dome under Excavation

- since Dec. 1991 until Aug. 1994

(Photo by the Courtesy of ICRR, U-Tokyo)

Our Experience

Case History of Super KAMIOKANDE Cavern Excavation

- Super-K Cavern Excavation (69,000m³) was Successfully Completed with no Loss Time of Injury.

- Long Term Stability of Rock Mass Surrounding the Cavern has been Maintained.

- Optimized Design Based on Geological and Engineering Properties of In-Situ Rock Mass.

- Qualified Mining Technologies, Informed, Monitored & Modernized Excavation Method.

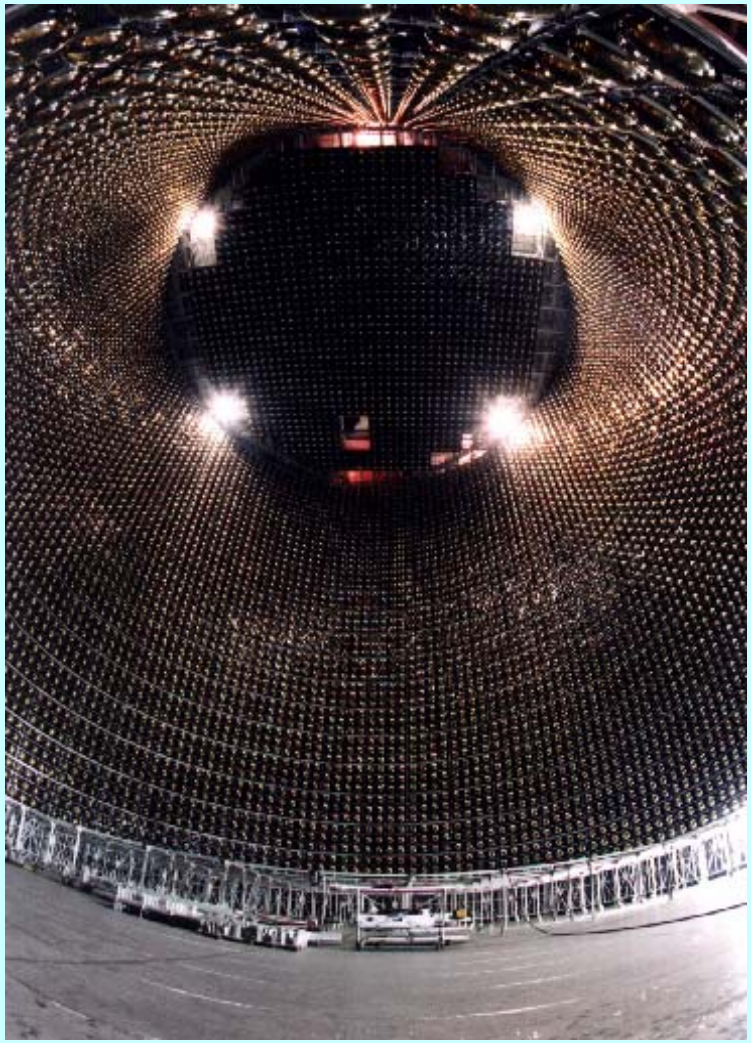

Super-KAMIOKANDE Observatory

MITSUI KINZOKU

Design Requirements of the Hyper-K Cavern

1. 1,000,000 m^3 Huge Cavern Stabilizing for Over 20 Years
2. Located at 700m - 850m (at least 500m) Subsurface Depth
3. Single Cavern is Best, 2 - 4 Caverns are Permissible
4. Detector Tank Height in the Cavern < 60 m
5. Vast Amount of Extremely Clean Natural Water Supply
6. Convenient Underground Site
   - realizing Safer and Easier Access from the Surface Facilities outside of the Mine, Satisfying Various Research Requirements and Minimizing Total Cost

Challenging Points of Hyper-KAMIOKANDE Cavern Excavation

1. **Megaton Size Cavern - No Experience**

   Approximately 20 times Larger than Super-K Cavern and 4 times Larger than our experienced Largest Open Stoped Cavern at TOCHIBORA Mine, Kamioka

2. **Very Large Initial State of Stress in the Rock Mass**

3. **Securing Long Term Stability of the Cavern**

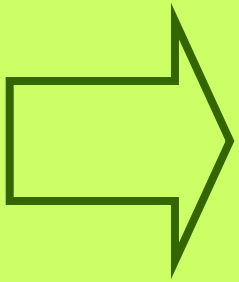

We need Rock Engineering Break-Through

- Optimum Cavern Design
- Feasible Excavation Method, Blasting Technique
- Rock Support System

・It is very “Important & Necessary” to take full Advantages of KAMIOKA Mine’s Characteristics based on Long History of Underground Mining Activities.

- Cost Effective Excavation, Geological & Rock Mechanical Data Base, Easy Access to the Underground Site, Established Infrastructures

Preliminary Survey of In-Situ Rock Mass Hyper-K Proposed Site MOZUMI Mine

Excavating Approach Drift to the Test Site at MOZUMI Mine

Examining In-Situ Rock Condition (Geological Sketching from Rock Engineering Aspects)

MITSUI KI

Preliminary Survey of In-Situ Rock Mass

Hyper-K Proposed Site, MOZUMI Mine

Exploration Diamond Drilling for Obtaining In-Situ Geological Information

Investigating Rock Characteristics by Examining Recovered Core at the Proposed Site (MOZUMI Mine)

Preliminary Survey of In-Situ Rock Mass Hyper-K Proposed Site TOCHIBORA Mine

Existing Approach Tunnel to the Site is Surveyed at TOCHIBORA Mine

Examining In-Situ Rock Condition (Geological Sketching from Rock Engineering Aspects)

“240° - ME” Fault is Inspected

“ANKO” Fault is Inspected

Preliminary Survey of In-Situ Rock Mass

Hyper-K Proposed Site, TOCHIBORA Mine

Diamond Drilling for Obtaining In-Situ Geological Information is also conducted

Investigating Rock Characteristics by Examining Recovered Core (TOCHIBORA Mine)

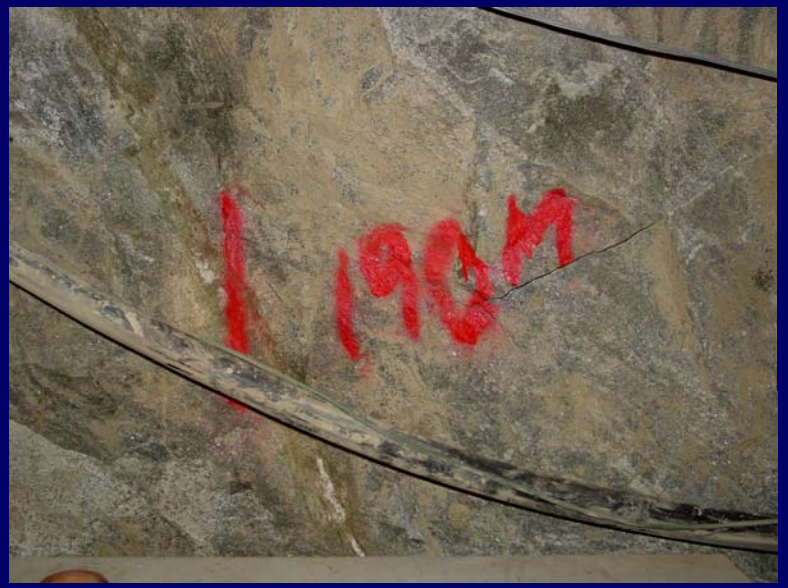

Rock Wall at the Drilling Chamber is Very Sound Intact Rock Mass in Fairly Good Condition (TOCHIBORA Mine)

Geological Map of Proposed Site at MOZUMI mine

Plan View of + 350mEL

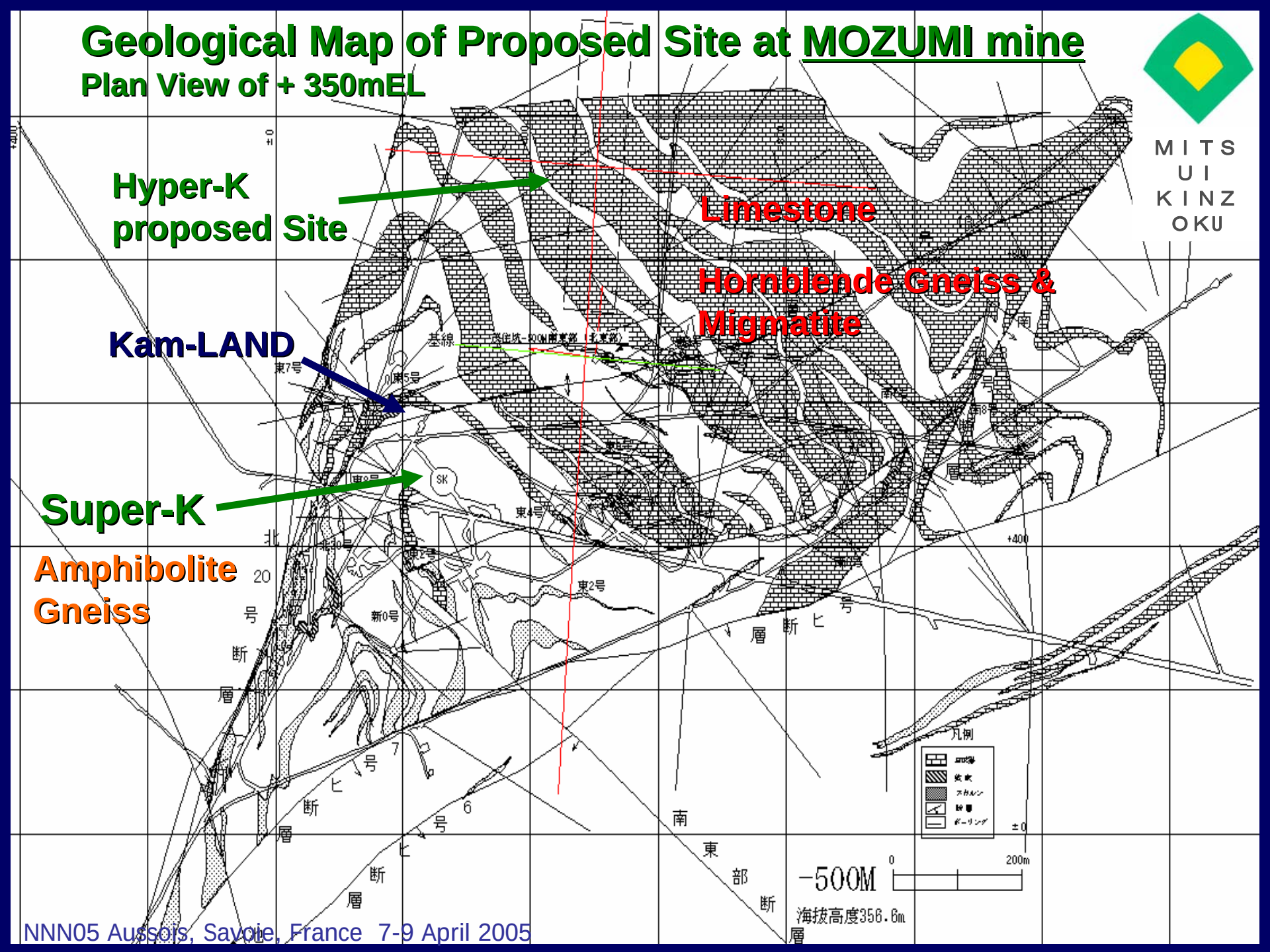

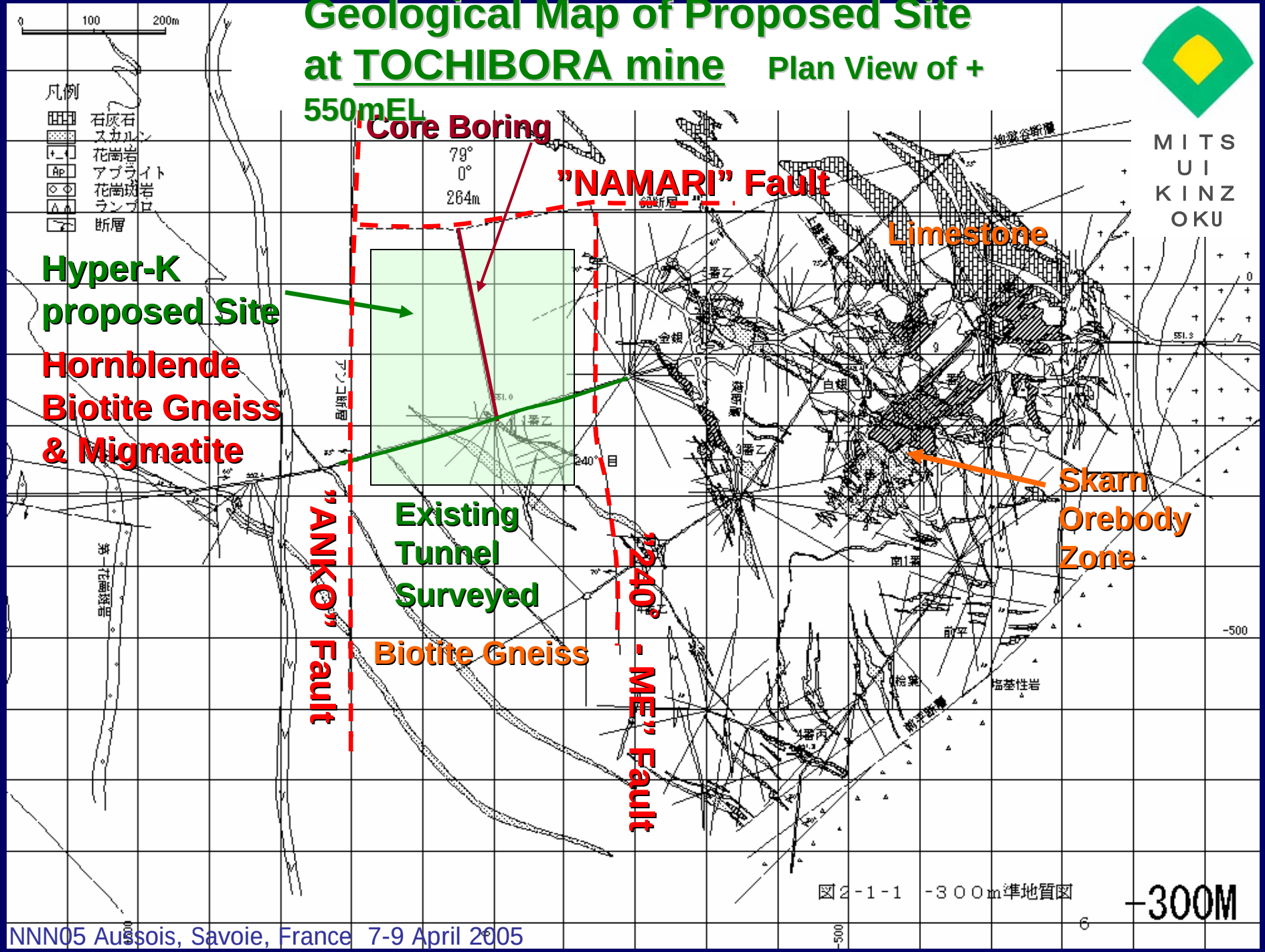
Geological Map of Proposed Site
at TOCHIBORA mine
Plan View of +
550mEl.
Core Boring
79°
0°
264m
"NAMARI" Fault
Limestone
Hyper-K
proposed Site
Hornblende
Biotite Gneiss
& Migmatite
"ANKO" Fault
Existing
Tunnel
Surveyed
Biotite Gneiss
"240°" - "ME" Fault
Skarn
Orebody
Zone
MITSUI KINZOKU
-300M

Geological Map of Proposed Site at TOCHIBORA mine

Plan View of + 480mEL

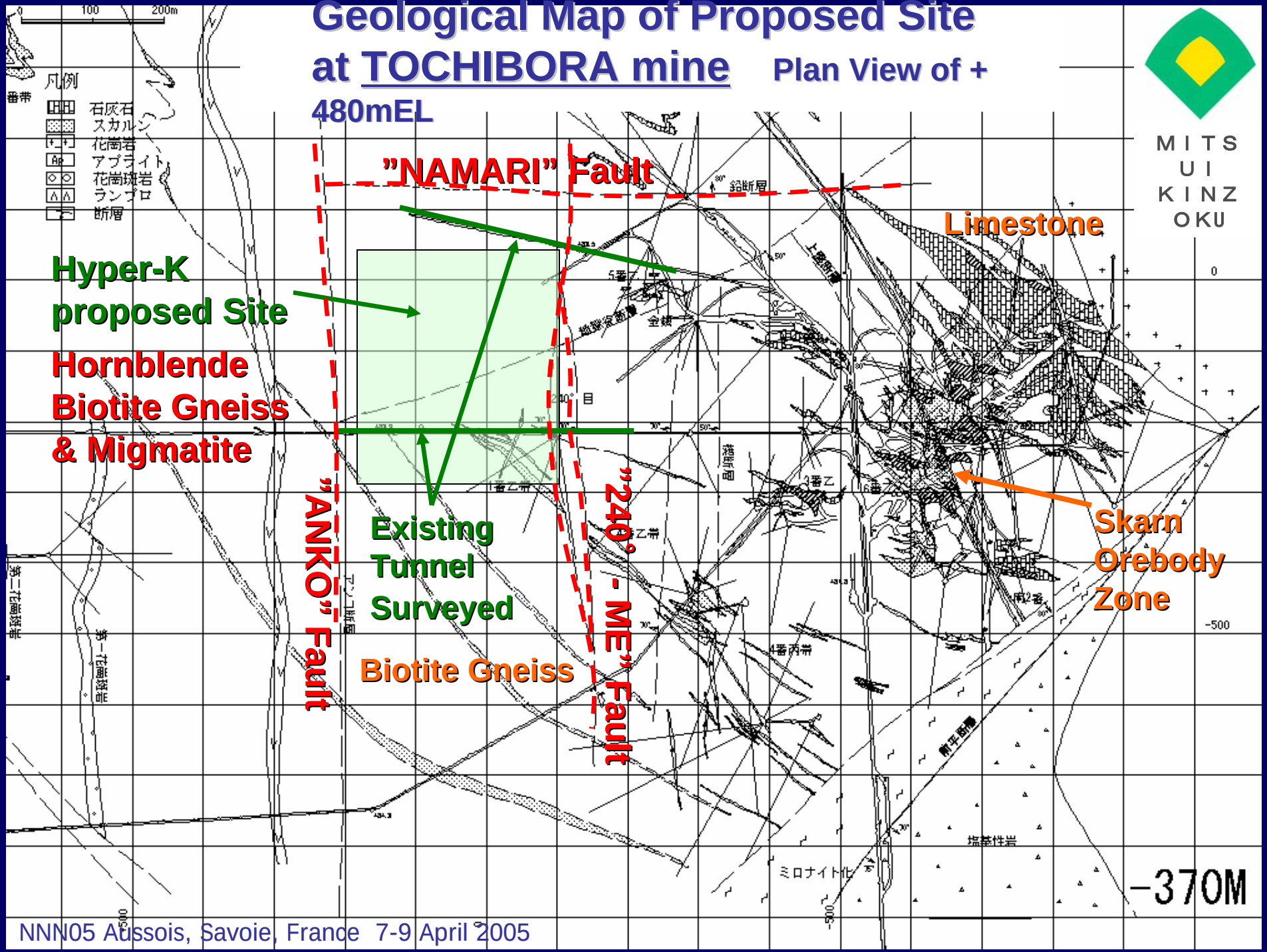

MITSUI KINZOKU

Rock Properties at Proposed Sites for Hyper-KAMIOKANDE Cavern

Items		Location	
		MOZUMI Mine	TOCHIBORA MINE
Overburden (Subsurface Depth)		870 m	600 - 670 m
Rock Types		Hornblende Gneiss, Migmatite, partly with Limestone	Hornblende Biotite Gneiss, and Migmatite
Density		0.026 MN/m3	0.026 MN/m3
Compressive Strength		105 MPa - 120 MPa	150 MPa - 250 MPa
Tensile Strength		9 MPa	8 - 10 MPa
Young's Modulus		48 GPa	45 - 55 GPa
Poisson's Ratio		0.26	0.25
Discontinuities	Spacing	0.2 - 0.6 m	0.6 - 2 m
	Condition	Slightly Rough	Very Rough
	Orientation	Favorable	Very Favorable
Ground Water		None	None
Rock Quality Designation (RQD)		78 %	85 %
Rock Mass Ratings (RMR)		79	89
Rock Mass Classification		Ⅱ	Ⅰ
		Good Rock Mass	Very Good Rock Mass
Rock Class (Japanese)		CH - Upper (partly B)	B (partly CH)

Hyper-KAMIOKANDE Cavern Models for Rock Mass Stability Analysis

Large Tunnel Type & Cylindrical Dome Type (same as Super-K)

Cavern Type	Cross Section Shape	Cavern Layouts	Cavern Models	Height (m)	Width (Span) (m)	Equivalent Diameter (m)	Cavern Spacing (m)	Vertical Cross Section Area (m2)	Tunnel Length (m)	Volume / Cavern (m3)	Number of Caverns needed
Horizontal Tunnel	Oval Egg Shaped	Single	Model 1	54.2	44.4	49.3	---	2,000	500	1,000,000	1
Vertical Cylindrical Dome		Multiple Cavern properly Arranged	Model 2	60.0	60.0	60.0	not considered	3,368	Horizontal Area (m2) 2,827	152,600	7

Model 1 : Single Huge Tunnel

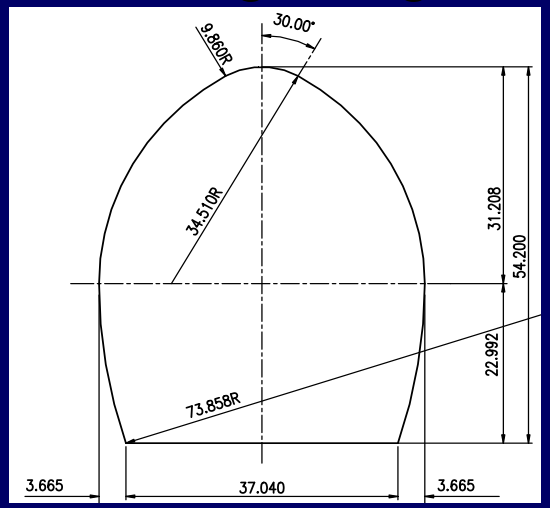

2-D Elastic F.E.M.
(Plane Strain Condition)

Model 2 : Cylindrical Dome Larger than Super-K

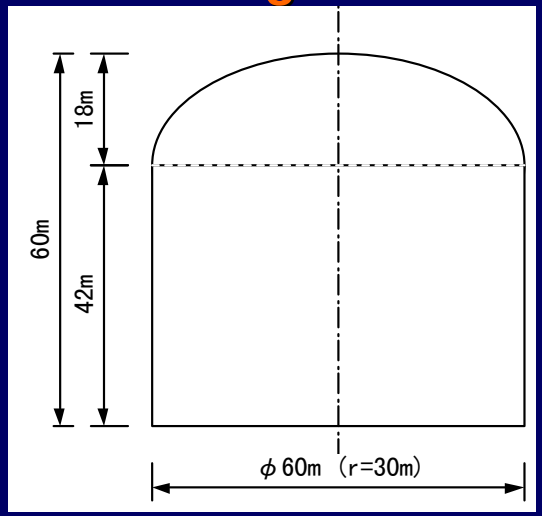

Axisymmetric Elastic F.E.M.

Input Parameters for F.E.M Analysis of Hyper-KAMIOKANDE Cavern

Location		MOZUMI				TOCHIBORA			
Analyzed Cavern	Type	Model 1		Model 2		Model 1		Model 2	
	Shape	Tunnel		Dome		Tunnel		Dome	
	Vertical Section (m^2)	2,000		3,368		2,000		3,368	
Analyzed Case		Case**1**	Case**2**	Case**5**	Case**6**	Case**3**	Case**4**	Case**7**	Case**8**
Initial Stress Ratio $\sigma H / \sigma V$		0.44	0.74	0.44	0.74	0.45	1.00	0.45	1.00
Overburden (Subsurface Depth)		500 m				500 m			
Rock Density		0.027 MN/m^3				0.027 MN/m^3			
Young's Modulus		5.0 GPa				10.0 Gpa			
Poisson's Ratio		0.25				0.25			
Failure Criteria		Coulomb's Condition				Coulomb's Condition			
Angle of Internal Friction		55 degree				60 degree			
Cohesion (Shear Strength)		3.92 MPa				4.90 MPa			
Assumed Rock Class (Japanese)		CH - Upper				B			

Safety Factor Diagram around the Proposed Hyper-K Cavern

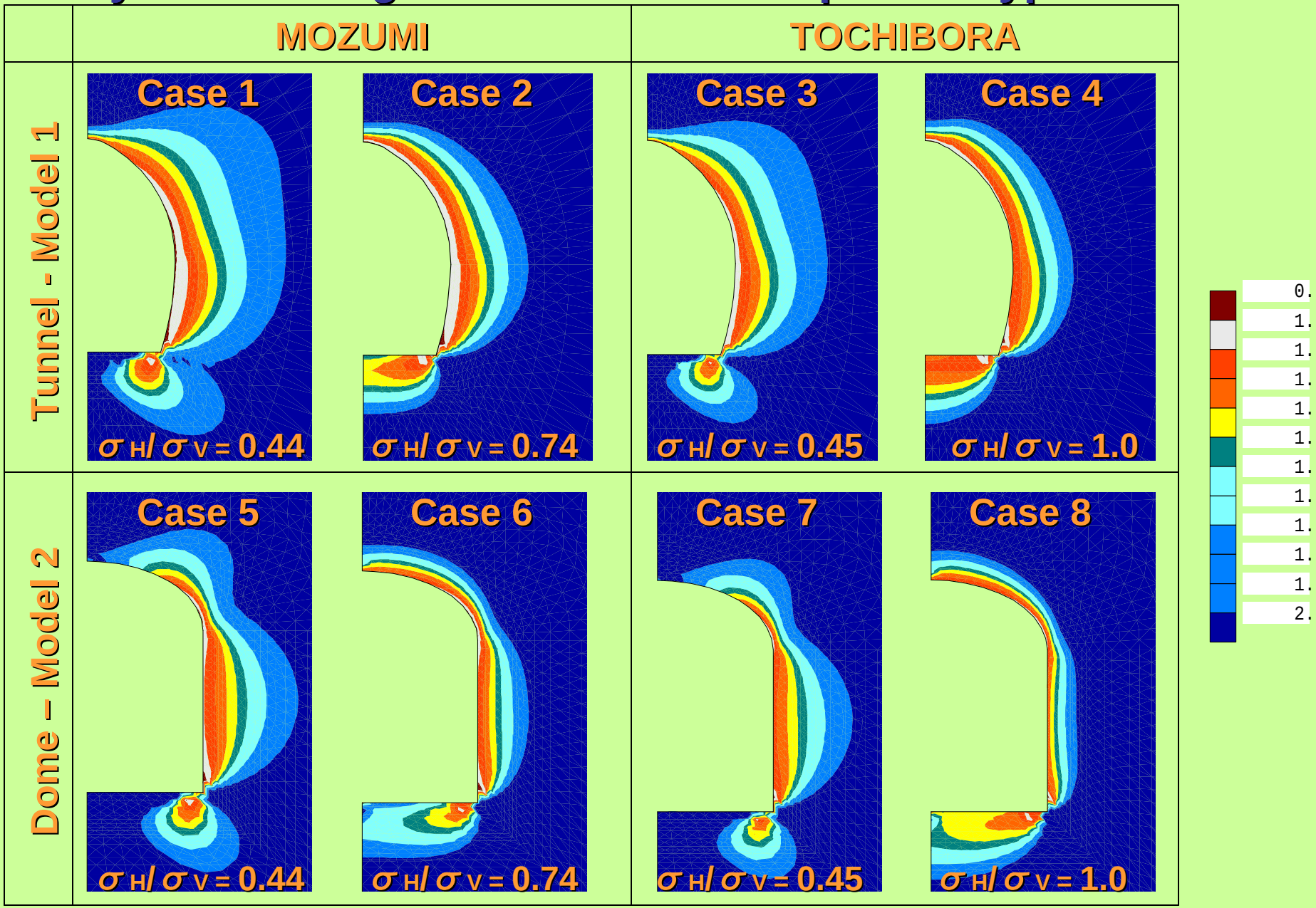

Results of F.E.M Analysis of Hyper-KAMIOKANDE Cavern

Location			MOZUMI				TOCHIBORA			
Analyzed Cavern	Type		Model 1		Model 2		Model 1		Model 2	
	Shape		Tunnel		Dome		Tunnel		Dome	
	Vertical Section (m^2)		2,000		3,368		2,000		3,368	
Analyzed Case			Case**1**	Case**2**	Case**5**	Case**6**	Case**3**	Case**4**	Case**7**	Case**8**
Initial Stress Ratio $\sigma H / \sigma V$			0.44	0.74	0.44	0.74	0.45	1.00	0.45	1.00
Unstabe Zone Depth from the Cavern Wall (m)	Safety Factor	1.0	none	none	none	none	none	none	none	none
		1.3	8.6	7.4	6.1	2.6	6.1	4.9	3.7	0.6
		1.5	13.5	11.0	11.3	6.0	11.0	8.6	8.6	2.4
Maximum Displacement (mm)	Roof Vertical Disp.		92.9	76.2	82.0	72.3	46.0	30.7	40.7	31.8
	Wall Horizontal Disp.		34.0	79.9	27.6	52.3	17.7	59.7	14.2	36.8
Maximum Stress (MPa)	Roof		-0.4	-1.0	0.0	0.1	-0.5	-1.6	0.0	0.2
	Wall		-0.1	-0.1	-0.1	-0.1	-0.1	-0.1	-0.1	-0.1
Minimum Stress (MPa)	Roof		-12.7	-30.0	-4.9	-16.2	-13.3	-44.8	-5.2	-20.6
	Wall		-28.3	-24.6	-17.0	-15.0	-27.7	-21.7	-16.5	-13.8

- Compressive Stress ; + Tensile Stress

Hyper-KAMIOKANDE Cavern Models for Rock Mass Stability Analysis

Large Tunnel Type 2-D Elastic F.E.M. (Plane Strain Condition)

Cavern Type	Cross Section Shape	Cavern Layouts	Cavern Models	Height (m)	Width (Span) (m)	Equivalent Diameter (m)	Cavern Spacing (m)	Vertical Cross Section Area (m2)	Tunnel Length (m)	Volume / Cavern (m3)	Number of Caverns needed
Horizontal Tunnel	Oval Egg Shaped	Multiple, Parallel	Model 1	38.3	31.4	34.9	---	1,000	500	500,000	2
		Single	Model 2	54.2	44.4	49.3	---	2,000	500	1,000,000	1
		Single	Model 3	58.7	48.0	53.4	---	2,341	500	1,170,500	1
		Single	Model 4	54.0	48.0	51.0	---	2,076	500	1,038,000	1

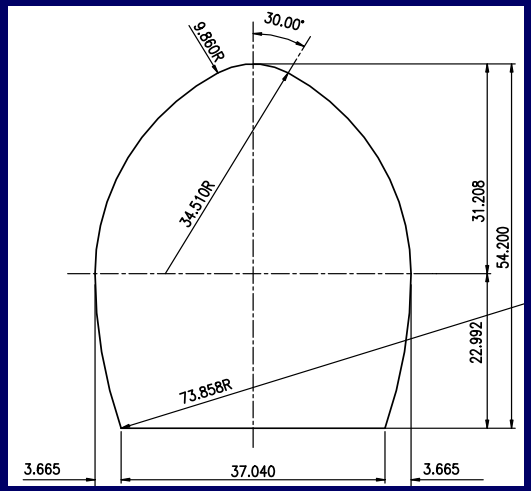

← Model 1 ,2, 3
Huge Tunnel with Different Vertical Cross Section Area

* Model 4 has the Cross Section → of Modified Oval Egg Shape minimizing Dead Space around the Horizontal Cylindrical Detector Tank.

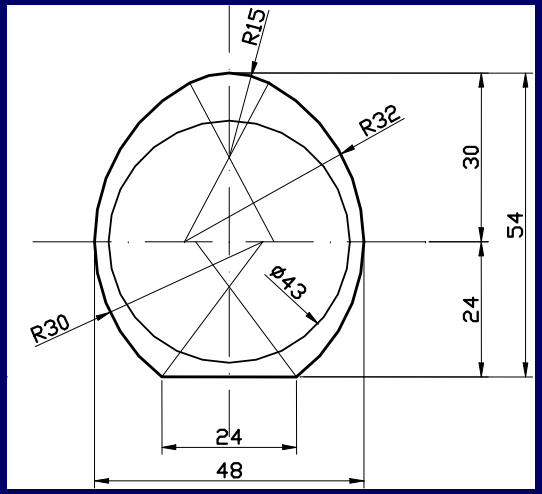

MITSUI KI

Input Parameters for F.E.M Analysis of Hyper-KAMIOKANDE Cavern

Location		TOCHIBORA							
Analyzed Cavern	Type	Model1	Model2	Model3	Model4	Model1	Model2	Model3	Model4
	Shape	Tunnel				Tunnel			
	Vertical Section (m^2)	1,000	2,000	2,341	2,076	1,000	2,000	2,341	2,076
Analyzed Case		Case1	Case2	Case3	Case7	Case4	Case5	Case6	Case8
Initial Stress Ratio $\sigma H / \sigma V$		0.45				1.00			
Overburden (Subsurface Depth)		500 m							
Rock Density		0.027 MN/m^3							
Young's Modulus		10.0 Gpa							
Poisson's Ratio		0.25							
Failure Criteria		Coulomb's Condition							
Angle of Internal Friction		60 degree							
Cohesion (Shear Strength)		4.90 MPa							
Assumed Rock Class (Japanese)		B							

Safety Factor Diagram around the Proposed Hyper-K Cavern

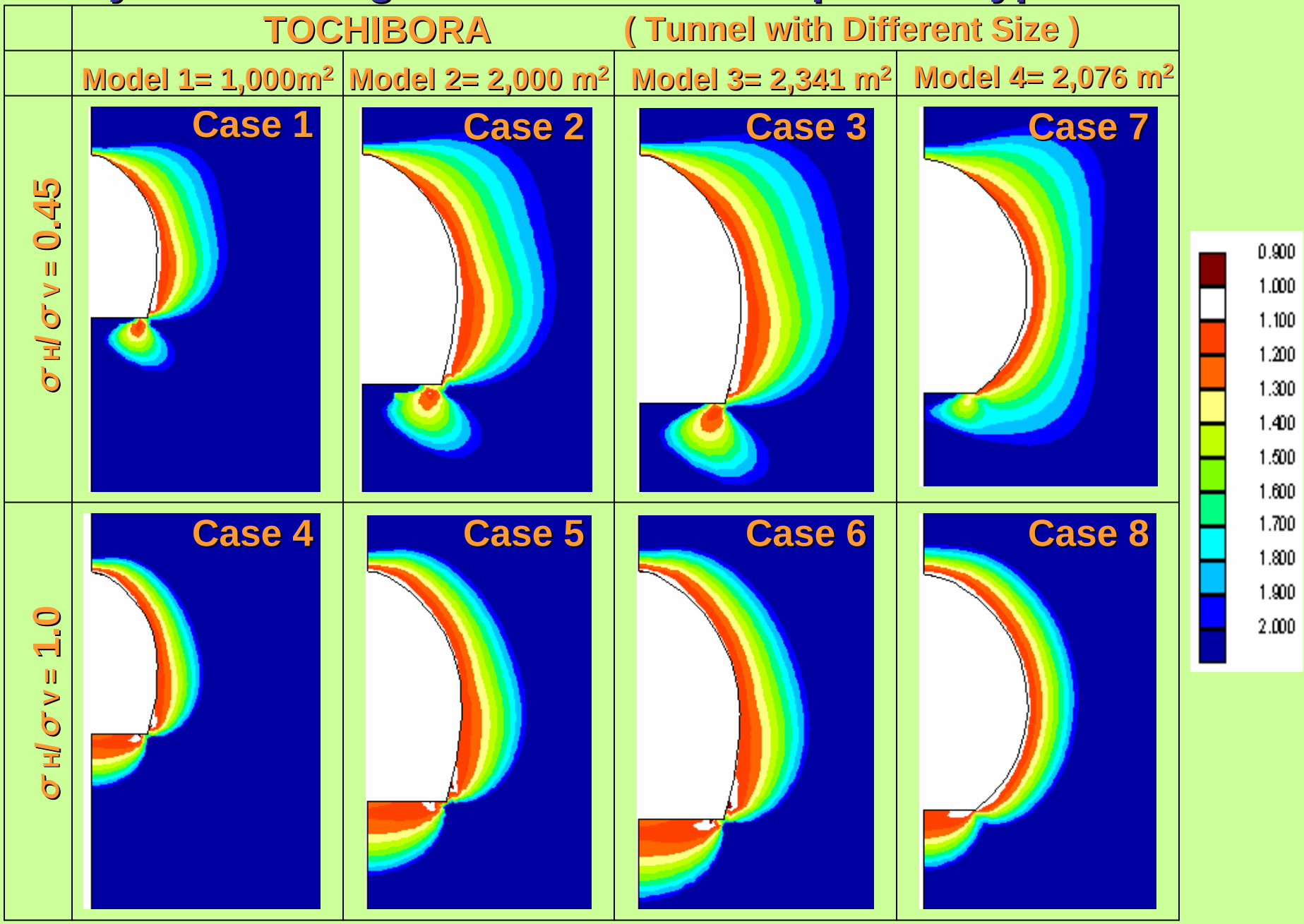

MITSUI KI

Results of F.E.M Analysis of Hyper-KAMIOKANDE Cavern

Location			TOCHIBORA							
Analyzed Cavern	Type		Model1	Model2	Model3	Model4	Model1	Model2	Model3	Model4
	Shape		Tunnel				Tunnel			
	Vertical Section (m^2)		1,000	2,000	2,341	2,076	1,000	2,000	2,341	2,076
Analyzed Case			Case1	Case2	Case3	Case7	Case4	Case5	Case6	Case8
Initial Stress Ratio $\sigma H / \sigma V$			0.45				1.00			
Unstabe Zone Depth from the Cavern Wall (m)	Safety Factor	1.0	none	none	none	none	none	none	none	0.2
		1.3	4.5	6.6	7.1	4.2	3.5	5.1	5.5	3.4
		1.5	6.8	11.1	11.8	8.1	6.0	8.7	9.2	6.0
Maximum Displacement (mm)	Roof Vertical Disp.		31.2	46.0	47.7	49.6	20.4	30.7	31.2	35.1
	Wall Horizontal Disp.		12.1	17.7	19.0	12.2	41.4	59.7	64.5	52.7
Maximum Stress (MPa)	Roof		-0.5	-0.5	-0.3	-0.2	-1.6	-1.5	-1.1	-0.6
	Wall		-0.3	-0.1	-0.1	-0.3	-0.2	-0.1	-0.1	-0.2
Minimum Stress (MPa)	Roof		-13.4	-13.3	-13.6	-9.4	-44.7	-44.8	-45.8	-36.8
	Wall		-26.8	-25.7	-26.7	-32.5	-19.4	-19.0	-19.8	-25.2

- Compressive Stress ; + Tensile Stress

Comparison of the Hyper-K Cavern from Various View Points

Cavern Type	Multiple Domes	Single Tunnel	Two Parallel Tunnels
Construction Period & Cost	×	○	○
Early Observation Startup	△	△	○
Observation during Maintenance	○	×	○
Cost Performance of Detector Tank	×	○	△
Cavern Stability	◎	○	○
Total Evaluation	×	△	○

Size of one Cavern (m)	Height	60.0	54.0	54.0
	Width	Φ60	48.0	48.0
	Length	–––	500	250
Vertical Cross Section Area (m^2)		3,368	2,076	2,076
Volume of one Cavern (m^3)		152,600	1,038,000	519,000
Required No. of Caverns		7	1	2
Total Volume of Caverns (m^3)		1,068,200	1,038,000	1,038,000

Hyper-KAMIOKANDE Cavern Analysis for Arrangement Optimization

Two Parallel Large Tunnel

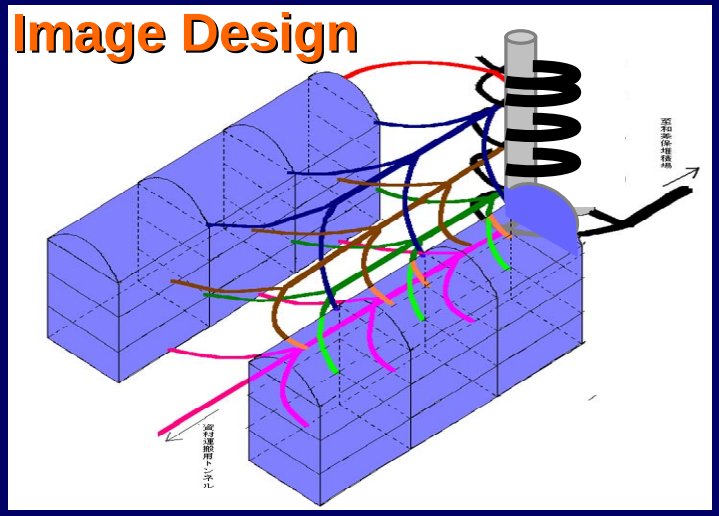

Layout (Direction, Spacing & Offset) should be considered under the Asymmetric In-Situ Stress Condition.

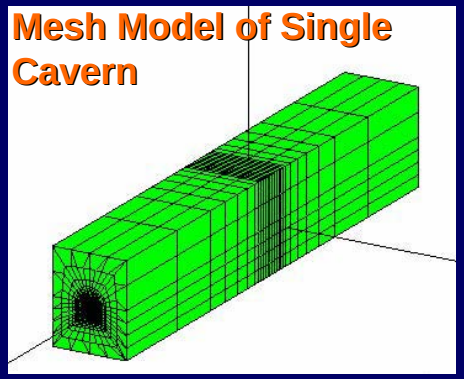

3-D Elastic F.E.M. Analysis

Location		TOCHIBORA
Analyzed Cavern	Shape	Tunnel
	Size	71mH×45mW×250mL
	Vertical Section (m^2)	3,050
Volume of one Cavern (m^3)		762,500
Required No. of Caverns		2
Total Volume of Cavern (m^3)		1,525,000
Initial State of Stresses (Introduced for the F.E.M. Analysis)	σ_1	-4.65 (027 / 022)
	σ_2	-8.85 (033 / 131)
	σ_3	-20.0 (045 / 262)
Young's Modulus		10.0 Gpa
Poisson's Ratio		0.25
Failure Criteria		Coulomb's Condition
Angle of Internal Friction		60 degree
Cohesion (Shear Strength)		4.9 MPa
Tensile Strength		10.0 MPa

Safety Factor Diagram around Hyper-K Single Cavern Model for Direction Optimizing Analysis at TOCHIBORA Mine

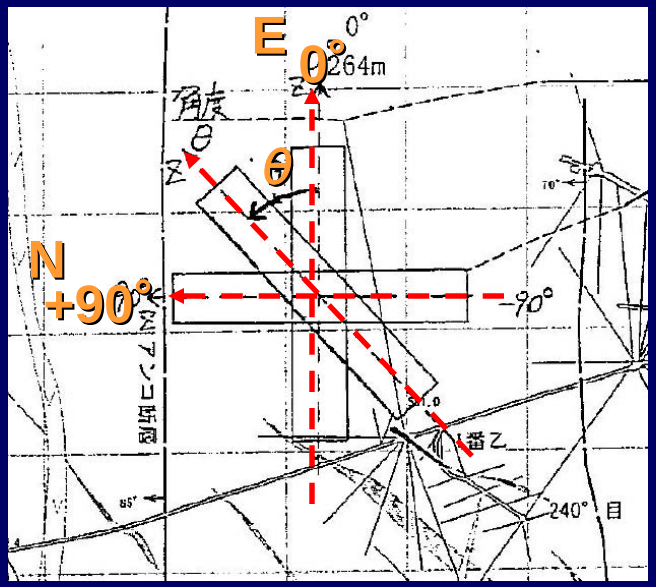

Vertical Cross Section in the Middle

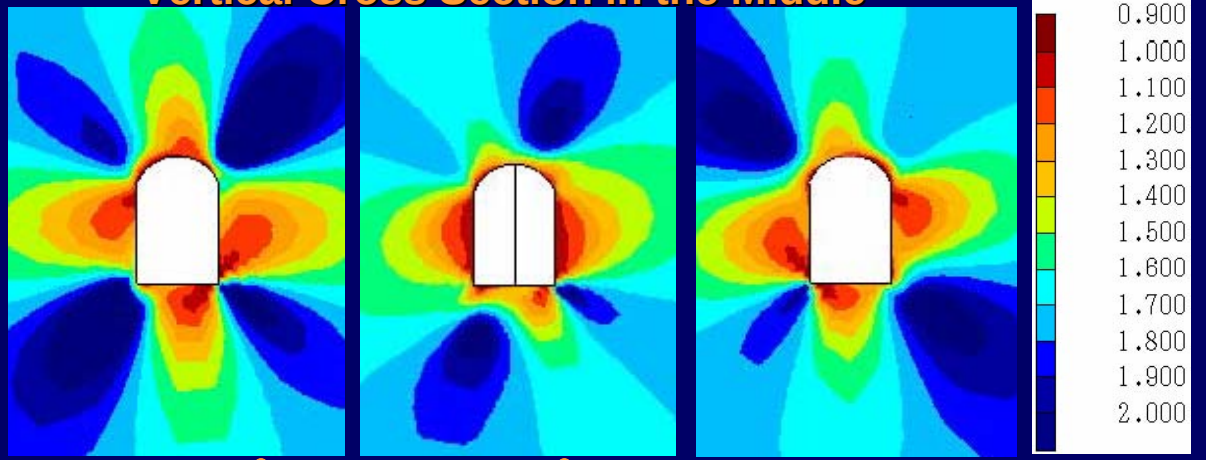

θ = -30° θ = 0° θ = +90°

Size of Unstable Zone(Sum of Max. Depth at Wall and Roof with SF≦1.4) Changes Depending on Tunnel Direction θ

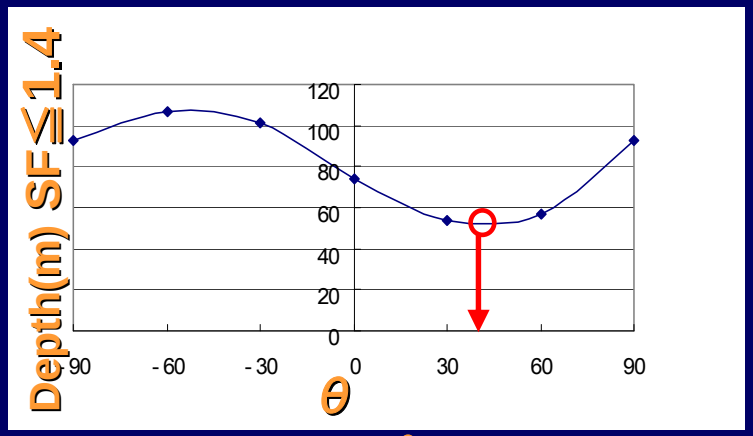

+42°

Vertical & Axial Cross Section in the Middle

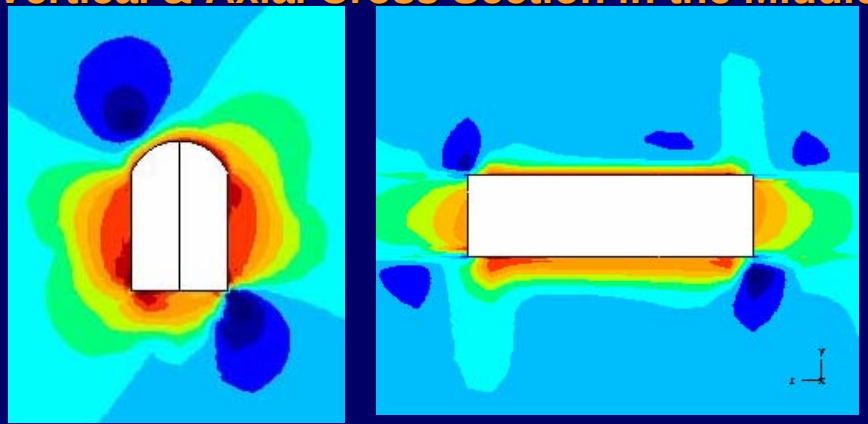

Direction at θ = +42° is Optimum

Safety Factor Diagram around Hyper-K Two Parallel Cavern Model for Spacing Optimization Analysis at TOCHIBORA Mine

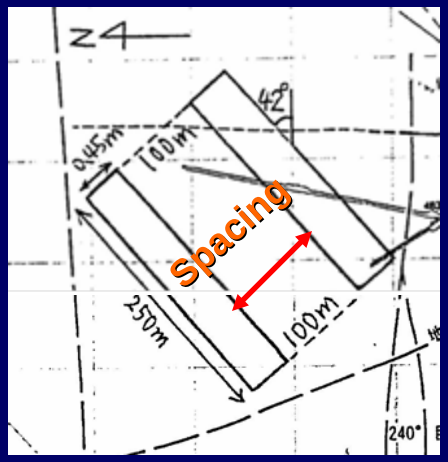

Vertical Cross Section in the Middle

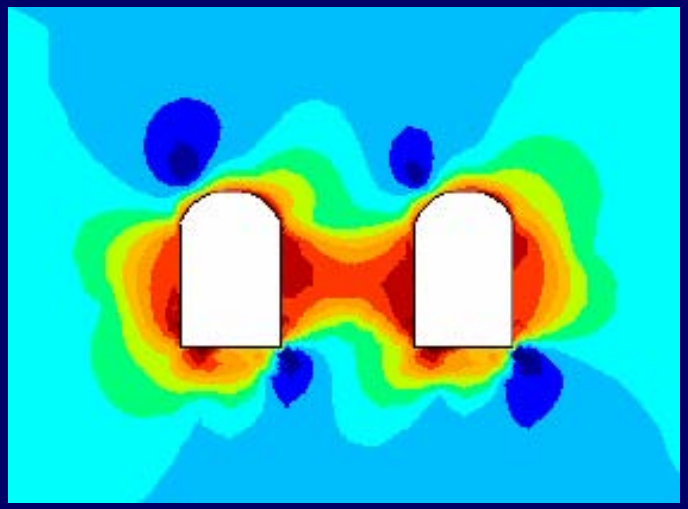

Spacing = 60 m

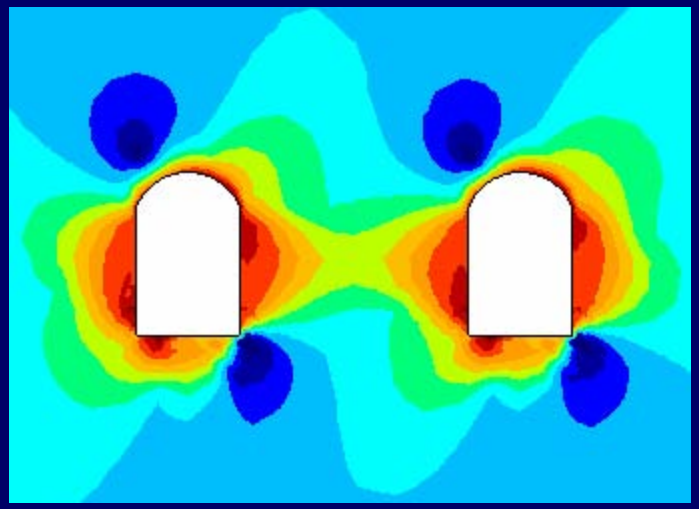

Spacing = 100 m

Spacing of 100 m is preferable.

Vertical Cross Section at one End

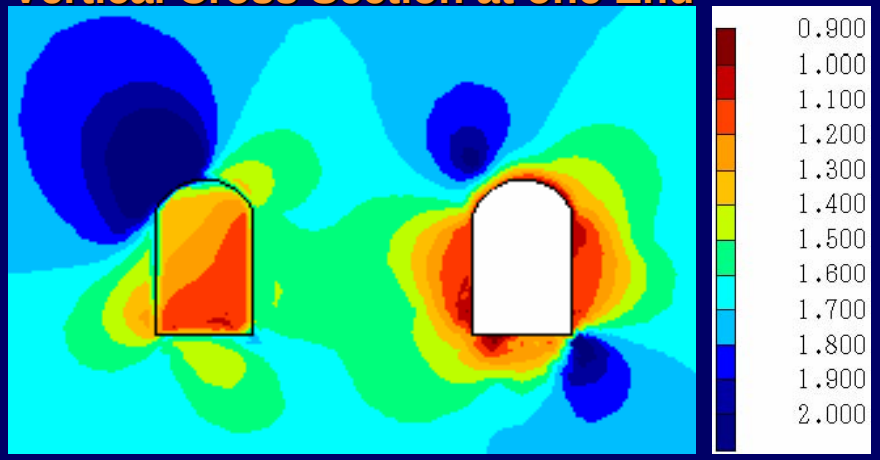

Spacing = 100 m

Mesh Model of Two Caverns

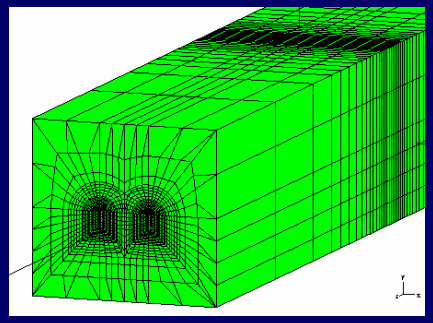

In any case, the Shape of Cavern-Ends should be considered and modified to relieve Stress Concentrations.

Safety Factor Diagram around Hyper-K Two Parallel Cavern Model for Analyzing Optimum Offset Layout at TOCHIBORA Mine

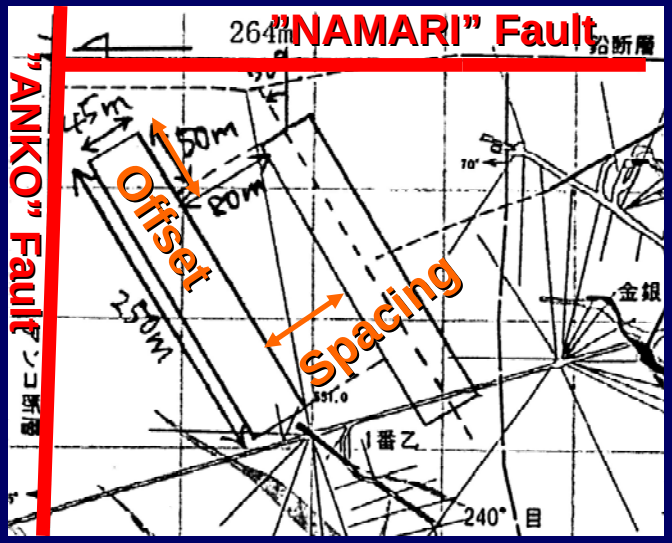

Vertical Cross Section in the Middle

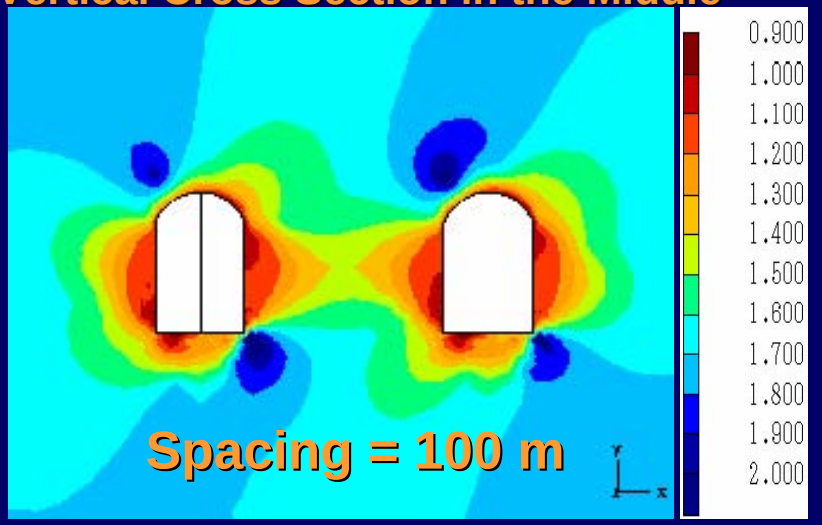

Layout with 100m Spacing and 100m Offset is the most preferable. However, considering the adjacent Faults, Layout with 80m Spacing and 50m Offset could be the best available.

Axial Cross Section of one Cavern

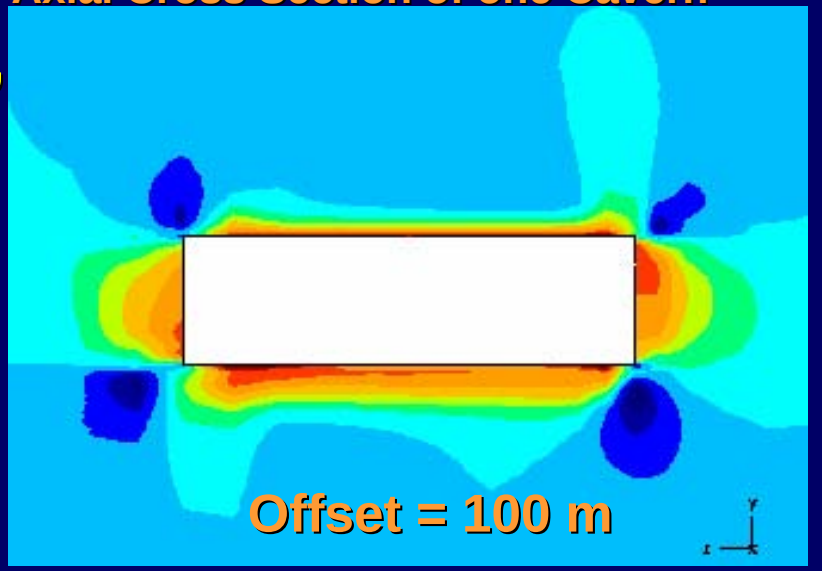

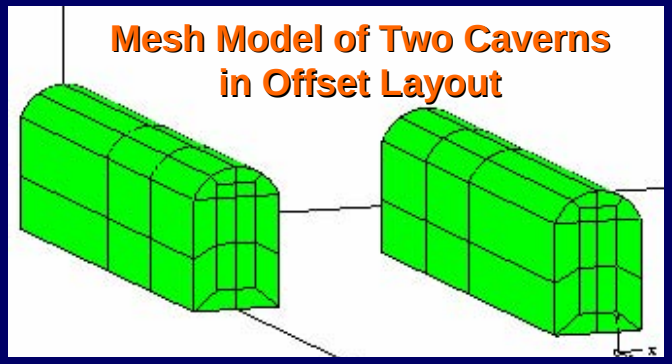

Hyper-KAMIOKANDE Cavern Analysis for End Shape Optimization

Analyzed Cavern Diagram and Surrounding Analyzed Area

Modified Egg Shaped Tunnel with Vertical Cross Section of 2,076m²

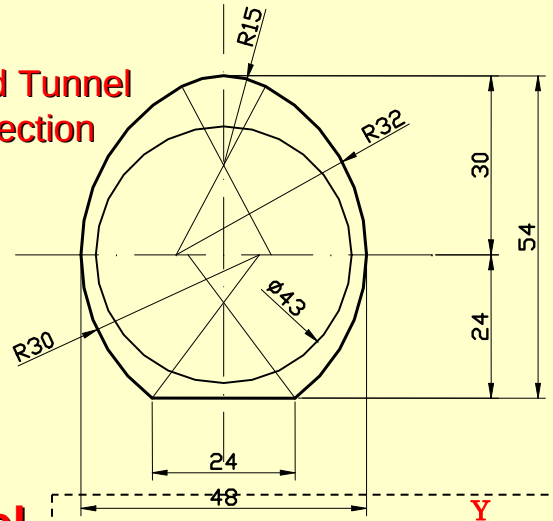

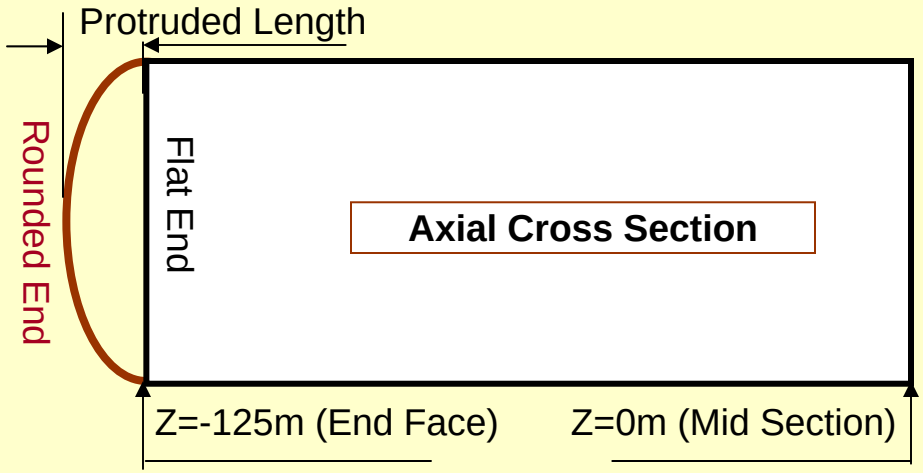

The Hypothetical Symmetric Initial Stress Conditions at TOCHIBORA Mine are adopted.

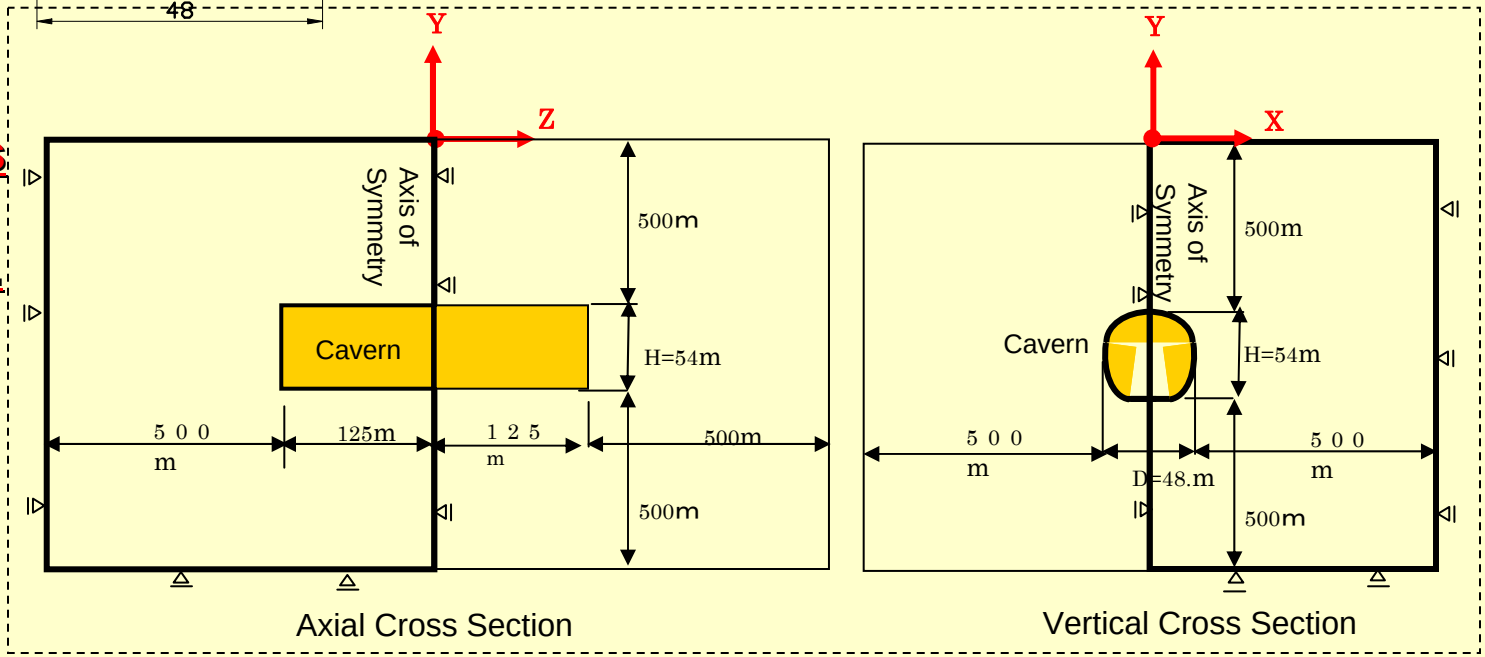

Quarter Zone is Analyzed by 3-D Elastic F.E.M. owing to the symmetries of the Cavern

Hyper-KAMIOKANDE Cavern Analysis for End Shape Optimization

Cavern Models of Various Rounded End Shape and Input Parameters

Model 2 : Slanted Ellipsoid

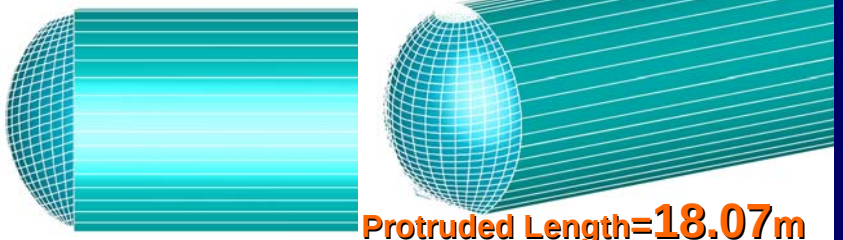

Protruded Length=18.07m

Model 2':Slanted&Pressed Ellipsoid

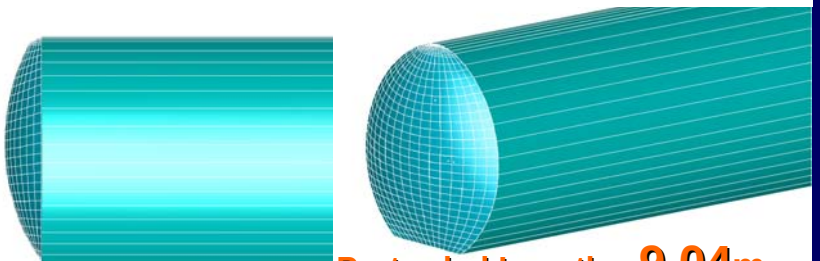

Protruded Length= 9.04m

Model 3 : Fillet Type

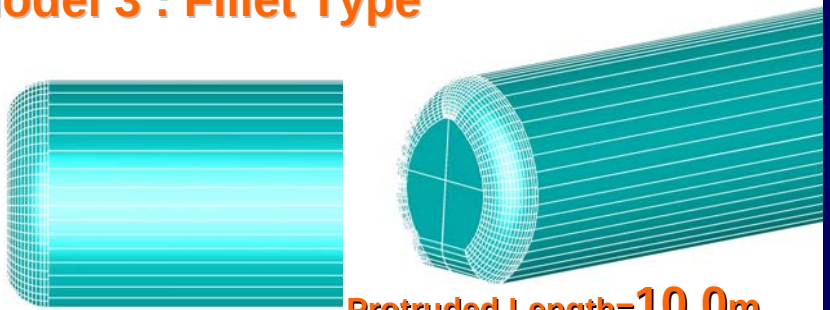

Protruded Length=10.0m

Location		TOCHIBORA		
Analyzed Cavern	Shape	Tunnel		
	Vertical Section (m^2)	2,076		
		Modified Egg Shaped Section		
	Type	Model2	Model2'	Model3
	End Face Shape	Slanted Ellipsoid	Slanted & Pressed Ellipsoid	Fillet
	Protruded Length (m)	18.07	9.04	10.0
Analyzed Case		Case1 Case2	Case3 Case4	Case5 Case6
Initial Stress Ratio	$\lambda x = \sigma Hx / \sigma Vx$	λx=0.45		λx=1.00
	$\lambda z = \sigma Hz / \sigma Vz$	λz=1.00		λz=0.45
Overburden (Subsurface Depth)		500 m		
Rock Density		0.027 MN/m^3		
Young's Modulus		10.0 Gpa		
Poisson's Ratio		0.25		
Failure Criteria		Coulomb's Condition		
Angle of Internal Friction		60 degree		
Cohesion (Shear Strength)		4.90 MPa		
Assumed Rock Class (Japanese)		B		

Safety Factor Diagram around Hyper-K Cavern Model for End Shape Optimization Analysis at TOCHIBORA Mine

$\lambda x = \sigma_{Hx} / \sigma_{vx}$ $\lambda z = \sigma_{Hz} / \sigma_{vz}$

Model 2': Slanted & Pressed Ellipsoid , Protruded Length= 9.04m

Unstable Depth of SF≦1.3 : 3.0m , 1.1m

Case 3 $\lambda x = 0.45$, $\lambda z = 1.0$

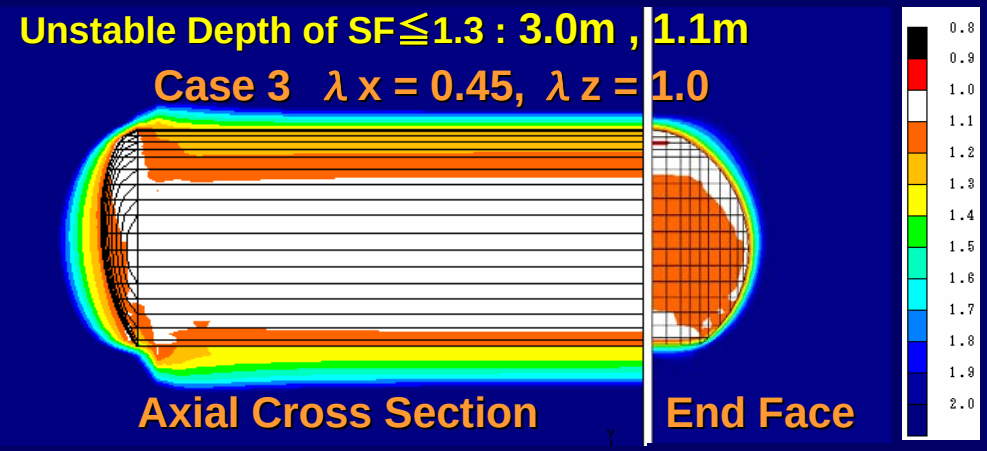

Unstable Depth of SF≦1.3 : 3.1m , 1.4m

Case 4 $\lambda x = 1.0$, $\lambda z = 0.45$

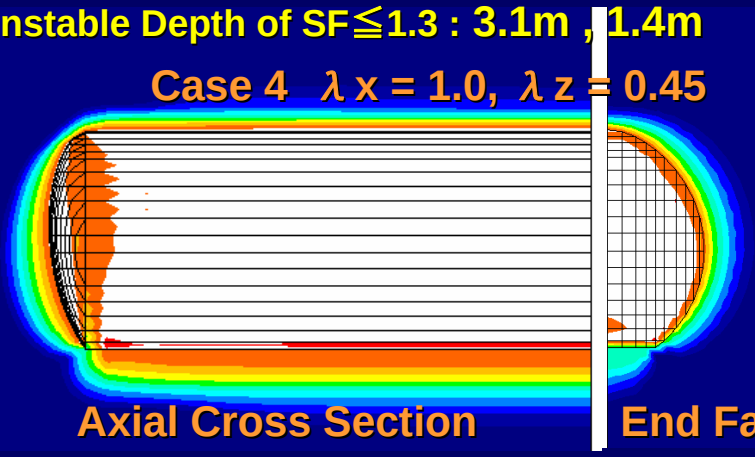

Model 3 : Fillet Type , Protruded Length=10.0m

Unstable Depth of SF≦1.3 : 5.2m , 0.8m

Case 5 $\lambda x = 0.45$, $\lambda z = 1.0$

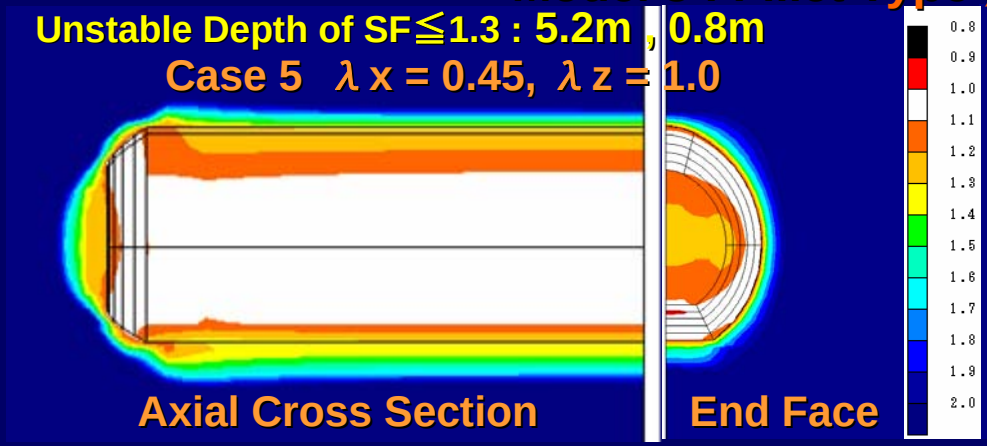

Unstable Depth of SF≦1.3 : 6.7m , 1.2m

Case 6 $\lambda x = 1.0$, $\lambda z = 0.45$

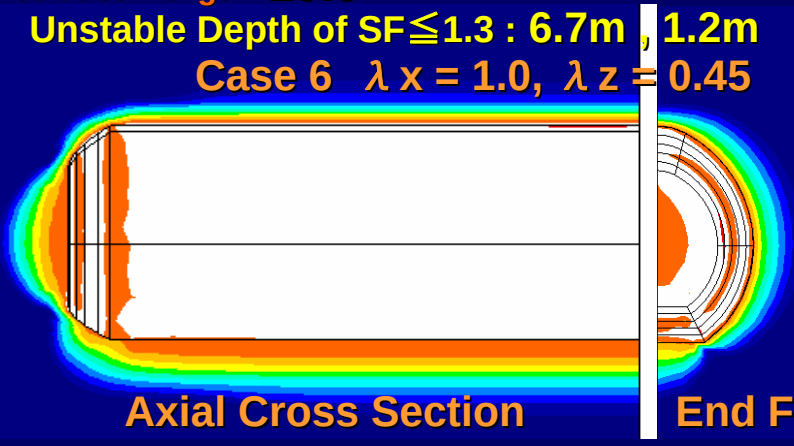

Model 2' : End Shape of Slanted Pressed Ellipsoid with the protruded Length of 9.04m is the most preferable.

MITSUI KI

Summary (1/2)

Ongoing Investigation and Feasibility Study on the Excavation of the Megaton Size Hyper-KAMIOKANDE Cavern at Kamioka Mine

*Site Selection : TOCHIBORA Mine, +480mEL~+550mEL is the most appropriate location with very competent rock condition.

*Cavern Design: Two 250m Long Parallel Tunnels with Modified Egg Shaped Section of 2,076m² are capable of being safely excavated and stabilized. Stress Concentration at the Cavern Ends should be relieved by Rounding the Edge to form “Slanted Ellipsoid” (for example Protruded Length of 9.04m)

*Cavern Layout : Two Parallel Tunnels as above should be Located properly with 80m –100m Spacing and 50m-100m Offset to avoid the Deteriorated Zone of Surrounding Faults such as “Namari”, “Anko”, “240° -ME” Faults. In Determining the Direction of the Tunnel- Axis (for example 42 ° N from E), Asymmetry of the Real In-Situ Initial Stress Conditions must be seriously Considered. **– Further Investigations and Rock Engineering Studies, especially Measurements of In-Situ Initial Rock Stresses are indispensable including Direct Exploration Drilling & Geo-survey Tunneling at TOCHIBORA Mine’s Candidate Site.**

Summary (2/2)

Ongoing Investigation and Feasibility Study on the Excavation of the Megaton Size Hyper-KAMIOKANDE Cavern at Kamioka Mine

Themes of our Major Concerns :

On Further Engineering Study of Rock-Mechanics & Construction

*Excavation Method – Bench Stoping or Modified Sublevel Stoping Method

*Effective Rock Support System and Monitored, Informed Excavation System should be Designed and Harmonized with Construction Design & Procedures in Well Organized Manners.

*Main Haulage Tunnel Design – Speedy & Convenient Routes should be Proposed.

*Treatment method of the Excavated Waste Rock should be considered.

- Disposal in the existing Waste Tailing Dam,we think negotiation with the Authorities of Mine Safety Laws is necessary.
- Reuse as Construction Materials, Crushed Gravel Rocks, Sands, Mixing Material in Concrete Products etc. could be possible.

*Clean Water Resource & Supply at TOCHIBORA Mine should be precisely Planned and Estimated

*The Hyper-K Cavern Construction Scheduling & Precise Cost Estimation need to be pushed forward.

Study on the Excavation of the Hyper-KAMIOKANDE Cavern at Kamioka Mine in Japan

MITSUI KINZOKU

Acknowledgements

- Dr. Nakamura in KEK, Dr. Kajita and Research Staffs in ICRR, the Univ. of Tokyo for the Sponsorship and Opportunity of this Survey.

- Dr. Jiro Yamatomi, Geo-System Engineering Dept. Faculty of Engineering, the Univ. of Tokyo for Supervising the overall Rock Engineering Surveys.

- Shimiz Corporation, Japan for the cooperation in F.E.M. Analysis of the Cavern Stabilities.