REFERENCE USE

SLAC-32
UC-28, Particle Accelerators
and High-Voltage Machines
UC-34, Physics
TID-4500 (34th Ed.)

TWO-MILE ACCELERATOR PROJECT

Quarterly Status Report

1 April to 30 June 1964

October 1964

Technical Report
Prepared Under
Contract AT(04-3)-400 and
Contract AT(04-3)-515
for the USAEC
San Francisco Operations Office

Printed in USA. Price $2.25. Available from the Office of Technical Services, Washington 25, D.C.

TABLE OF CONTENTS

		Page
I.	Introduction	1
II.	Plant engineering	3
	A. General	3
	B. Design status	3
	C. Construction status	5
III.	Systems engineering and installations	11
	A. Accelerator engineering, design, and inspection	11
	B. Accelerator installation	13
	C. Beam switchyard	13
IV.	Accelerator physics	15
	A. Injection	15
	B. Drive system	20
	C. Phasing system	23
	D. General microwave studies	26
	E. Optical alignment system	30
	F. Magnetic shielding	30
	G. Magnetic interference	30
V.	Instrumentation	31
	A. General	31
	B. Data handling	31
	C. Beam guidance	31
	D. Trigger system	32
	E. Modulator-klystron protection system	32
	F. Personnel radiation protection system	33
	G. Signal circuit documentation	33
	H. Central control	33
	I. Machine radiation protection	34
VI.	Heavy electronics	35
	A. Main modulator	35
	B. Sub-booster modulator	38

		Page
VII.	Mechanical design and fabrication	39
	A. Introduction	39
	B. Modified alternating coupler feed position for beam symmetry	39
	C. Accelerator structures	44
	D. Strongback structures	56
	E. Forty-foot support girders	57
	F. Rectangular waveguide phase measurement	57
	G. Rectangular waveguide high power tests	63
	H. Borescope inspection of rectangular waveguide brazes	63
	I. Model A directional coupler	63
	J. Model B directional coupler	64
	K. RF loads	64
	L. RF waveguide vacuum valves	68
	M. Drift section	71
VIII.	Klystron studies	72
	A. Summary	72
	B. Subcontracts	72
	C. Facilities	73
	D. Klystron fabrication and development	75
	E. Stanford klystron usage	77
	F. Acceptance and life tests	77
	G. Installation on the machine	77
	H. High power klystron windows	78
	I. Sub-booster klystrons	84
IX.	Mark IV program	86
	A. Operation	86
	B. Machine modifications	87
	C. Program for the next quarter	88
X.	Beam switchyard	89
	A. General	89
	B. Instrumentation and control	89
	C. Magnets	92

		Page
	D. Power Supplies	92
	E. Vacuum chamber system	92
	F. Beam dumps	93
	G. Collimator, slits	93
	H. Magnet supports	93
	I. BSY alignment	93
XI.	Target area development	95
	A. Data assembly building	95
	B. End stations A and B	95
	C. Target area site improvements and utilities	95
XII.	Pre-operations research and development	96
	A. Theoretical physics	96
	B. Experimental physics	97
	C. Magnet research	98

LIST OF FIGURES

		Page
1.	Klystron Gallery as viewed from Jasper Ridge	6
2.	Construction status of Central Laboratory	7
3.	Aerial view of SLAC laboratory area	8
4.	Klystron Gallery Sectors 4, 5, and 6 under construction	9
5.	Accelerator Housing under construction; Target Area excavation in background	10
6.	Subharmonic beam knockout system comparison of 40 Mc deflection system with 2816-2896 Mc beat frequency deflection system	19
7.	Schematic for beam position monitoring system in the drift sections	25
8.	Schematic of resonant ring system to be used as a beam position monitor in the beam switchyard	27
9.	Effect of longitudinal electric field asymmetry in the coupler cavities	29
10.	Adjacent 40-foot segments showing alternating coupler modifications	40
11.	Schematic diagram of reduced pressure water temperature control system for rf tuning	45
12.	Hydraulic tuning system	46
13.	Accelerator structure tuning plot	47
14.	Accelerator structure phase plot	48
15.	Input reflection coefficient plot	49
16.	Average temperature differential at varying power levels	52
17.	Power vs inlet water temperature change	53
18.	Power vs change in phase (runs 2-7, 13-17 and 24-27)	54
19.	Power vs change in phase (runs 28-31 and 32-37)	55
20.	H-plane miter bend	59
21.	Modulated reflection circuit	60
22.	Addition of amplitude – modulation reflection and the CW reference signal	60

Page

23. Model B directional coupler 64
24. Waveguide to 7/8 inch coaxial adapter 65
25. RF load, cross-sectional view 66
26. Waveguide valve assembly cross-sectional view 68
27. Waveguide actuator assembly cross-sectional view 69
28. Stanford tube performance in permanent magnet 75
29. Window temperature vs time at 60 MW, 54 kW 79
30. Schematic layout of BSY instrumentation 89

I. INTRODUCTION

This is the ninth Quarterly Status Report of work under AEC Contract AT(04-3)-400 and the third Quarterly Status Report of work under AEC Contract AT(04-3)-515, both held by Stanford University. Contract AT(04-3)-400 provides for the construction of the Stanford Linear Accelerator Center (SLAC), a laboratory that will have as its chief instrument a two-mile-long linear electron accelerator. Construction of the Center began in June 1962, and the present schedule calls for first turn-on of the electron beam in the summer of 1966. The principal beam parameters of the accelerator in its initial operating phase are a maximum beam energy of 20 BeV, and an average beam current of 30 microamperes (at 10% beam loading). The estimated construction cost of SLAC is $114,000,000.

The work of construction is divided into two chief parts: (1) the accelerator itself and its related technical environment; and (2) the more conventional work associated with site preparation, buildings, utilities, etc. To assist with these latter activities, Stanford has retained the services, under subcontract, of the firm Aetron-Blume-Atkinson, a joint venture consisting of Aetron, a division of Aerojet-General Corporation; John A. Blume and Associates, Engineers; and the Guy F. Atkinson Company. In these reports this architect-engineer-management firm is often referred to as "ABA."

The terms of Contract AT(04-3)-400 provide for a fully operable accelerator and for sufficient equipment to measure and control the principal parameters of the electron beam; in addition, provision is made for an initial complement of general-use research equipment with which it will be possible to perform certain exploratory studies, such as measurement of the intensity and energy distribution of various secondary-particle beams.

Contract AT(04-3)-515 provides support for the various activities at SLAC that are necessary in order to prepare for the research program which will eventually be carried out with the two-mile accelerator. Among the principal activities covered in the scope of Contract AT(04-3)-515

are theoretical physics studies, experiments performed by the SLAC staff at other accelerators, research-equipment development programs (such as particle separators, specialized magnets, bubble chambers, etc.), and research into advanced accelerator technology. Contract AT(04-3)-515 went into effect on January 1, 1964, so that this development work is presently in an early stage.

Contract AT(04-3)-515 also provides for the initial stages of operation of the Center after construction is completed.

II. PLANT ENGINEERING

A. GENERAL

Design and construction of the conventional facilities continued throughout the quarter. Overall completion of the field work is scheduled for December 1965, and satisfactory progress is being made toward that goal.

Principal design effort was placed on the Beam Switchyard, and the work is nearly complete. The drawings and specifications are scheduled to go early in July. Of particular interest during the quarter was the completion of criteria and beginning of the Title I effort on the Cryogenics Facility. This is the final major structure to enter the design stage in the conventional facility program.

Plant Engineering continued its activities relating to space occupancy planning, facility alterations, and the provision of craft support for all SLAC groups. Most of the craftsmen were shifted to the Sand Hill site from their shop headquarters on campus in May. Housed now in Temporary Building "C", the craft group is better able to serve the majority of its customers.

As-built drawings and specifications are now being received from ABA. These documents will be retained by SLAC and used hereafter as facilities require alteration.

An all-weather construction road, approximately 2300 feet long, has been proposed to connect the Target Area and San Mateo County's Alpine Road. This road would relieve traffic congestion on site and reduce construction hauling costs. A preliminary design has been prepared.

B. DESIGN STATUS

Essentially all criteria work is finished and the peak ABA effort on preliminary design (Title I) has been passed. The status of two major items still in the latter phase is as follows:

a) Cryogenics Facility. The criteria package was developed by SLAC, and was turned over to ABA in June for preliminary design.

b) Target Area Site Improvements and Utilities. The Title I effort on this important increment of the project program is scheduled for completion by the end of July.

A second floor addition to the one-story wing of the Central Laboratory is in the pre-design stage. The addition will add 7000 square feet of floor space to the building. Present planning is to accomplish the construction through a change order to the Central Laboratory contractor.

Final design (Title II) is well along on several major facilities. These, together with their percentage of completion, are: Beam Switchyard (95), Master Substation Switchhouse (88), Auditorium-Cafeteria (60), Data Assembly Building (50), End Station "A" (12), and End Station "B" (7). As reported in the previous quarter, a request for proposals on the Material Handling System was issued March 18. Three proposals have been received for this Beam Switchyard system and are being evaluated.

Design of several facilities was completed, and bidding advanced to the stage indicated below:

a) Heavy Assembly Building Cranes. Four government surplus cranes are available and can be modified for SLAC use. Therefore, rather than accepting bids on this item, the surplus cranes are being obtained.

b) 220 kV Receiving Substation. The bid package will be mailed to prospective bidders in July.

c) Initial Landscaping Increment. Bids were opened on June 19 and are under review.

d) Control Building and Miscellaneous Site Improvements. Bids were opened on May 5, 1964. The contract was awarded to Harrod and Williams, Inc., and a notice to proceed was issued May 29.

e) Shops Dining Room. Title II work has just been completed and the bid package will be mailed early in July.

C. CONSTRUCTION STATUS

The status of major conventional facilities under construction is as follows:

Facility	Percentage of Completion
Heavy Assembly Building	81
Accelerator Housing	81
Central Laboratory	45
Klystron Gallery	16
Klystron Gallery Utilities	
Piping and Site Improvements (600-Y-1)	9
Electrical (600-Y-2)*	-
Cooling Towers (600-Y-3)**	22
Control Building	7

All items of work associated with Sectors 1, 2, and 3 of the Klystron Gallery construction contract were completed and turned over to SLAC. Work is well along on the next three sectors. A notice to proceed on Sector 7 was issued, effective June 28, 1964.

The Accelerator Housing is proceeding on schedule. All reinforced concrete will have been placed early in July; the floor slab is complete to Station 100+88, and the walls and roof slab are complete to Station 100+14.

Contract work on the Cleaning and Plating Area in the Fabrication Building was essentially complete on April 13, 1964. SLAC personnel began occupying the premises on that date.

The present status of a number of facilities in the construction phase is shown graphically in Figures 1 through 5.

---

*Notice to proceed was issued in May; field construction is scheduled to start in September.

**The first of two accelerator cooling towers is scheduled for completion in August 1964.

FIG. 1--Klystron Gallery as viewed from Jasper Ridge.

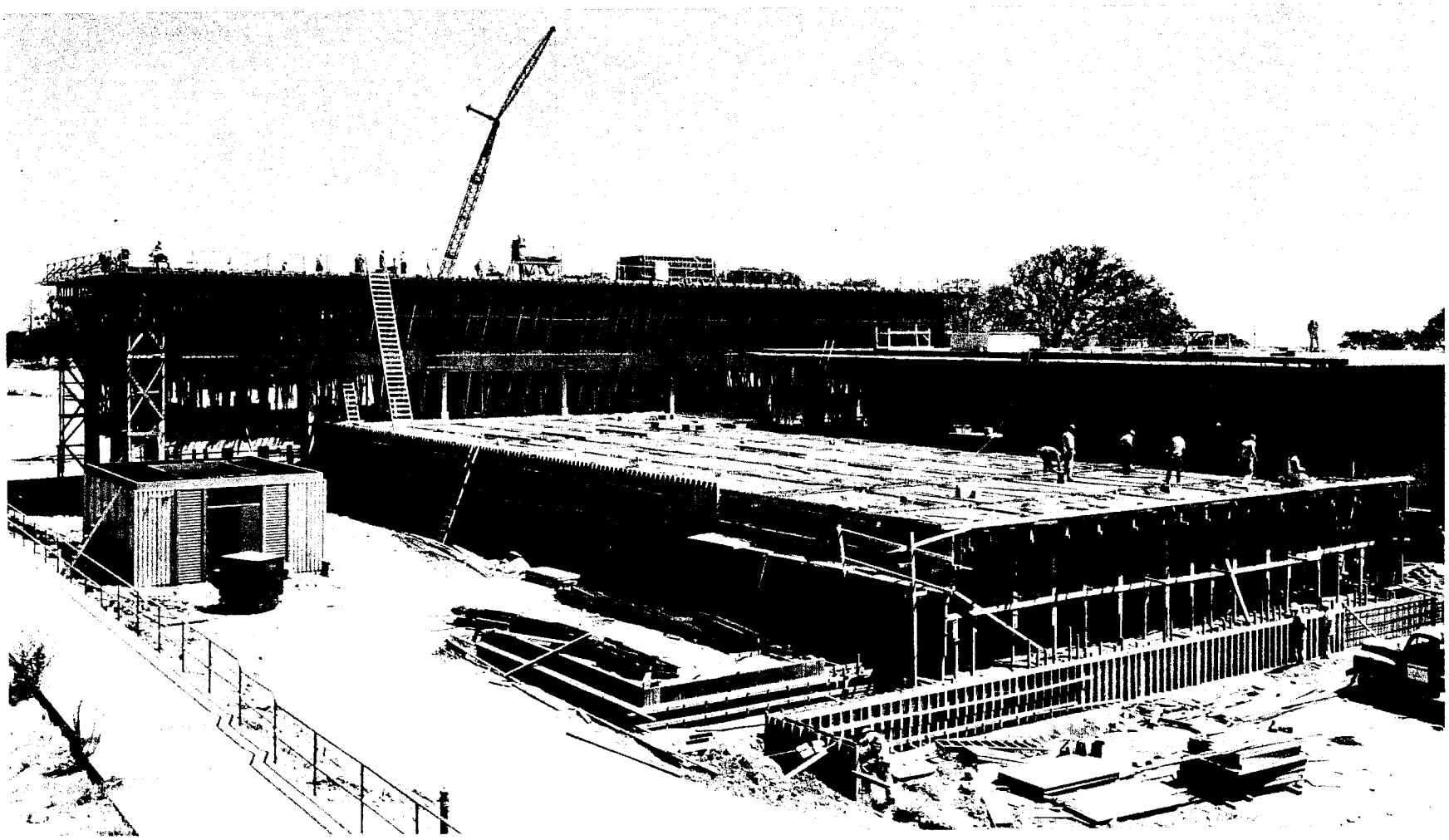

FIG. 2--Construction status of Central Laboratory.

FIG. 3--Aerial view of SLAC laboratory area.

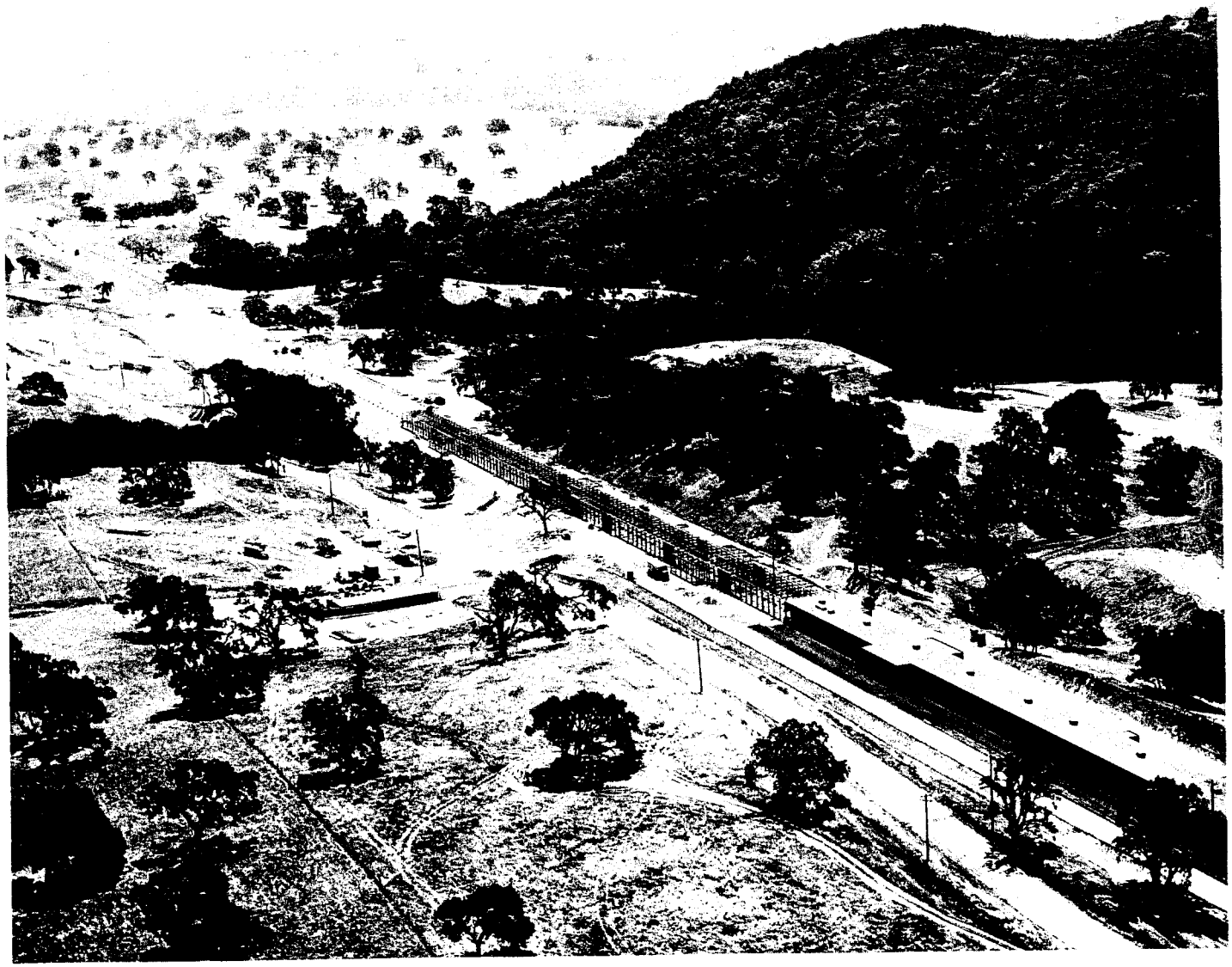

FIG. 4--Klystron Gallery Sectors 4, 5, and 6 under construction.

FIG. 5--Accelerator Housing under construction; Target Area excavation in background.

III. SYSTEMS ENGINEERING AND INSTALLATIONS

A. ACCELERATOR ENGINEERING, DESIGN, AND INSPECTION

1. General Accelerator Design

The final waveguide configuration for the main injector was established. Equipment, vacuum, cooling water, and electrical layouts for this system were frozen. Equipment and systems layout studies for the off-axis injector are under way.

Updating of definitive drawings for the accelerator housing continued. Definitive drawings were prepared for the beam knockout and beam momentum spectrometer stations.

2. Standards and Specifications

A cooperative effort has been initiated with the Electronics Department to incorporate their "Preferred Electronics Component Handbook" into the SLAC Standard Parts Catalog. Modification of Engineering Standards is under way.

Approximately 50 specifications were written or revised during this quarter in collaboration with requesting groups. Additional work involved support of procurement functions in connection with support and alignment items (target frame actuators, vertical and horizontal jacks, and jack hardware).

3. Model Shop

Models of the main injector, the off-axis injector, and the beam transporter were completed during the quarter, as were preliminary models of the beam switchyard.

4. Installation Drawings

Drawings of the electrical system for the main injector were revised. Changes to incorporate the new waveguide configuration (see Sec. VII) are being made in the phase monitoring cable drawings. Flow diagrams for the positron source cooling water system are under way. Drawings of the electronics systems for Sectors 1 and 2 were completed, and work began on the electronic rack layouts and schematics. Revisions to the main injector and positron source drawings were completed.

5. Vacuum Systems

Three-inch and six-inch valve assembly acceptance tests are under way. Results of preliminary tests of the six-inch valves have shown them to have conductances between 1180 and 1350 liters/second. Deliveries of small roughing valves and one-inch flanges are on schedule, but the gaskets were rejected because visible contamination was evident on the surfaces. The getter-ion pumps demonstrated a leakage current beyond specifications and were returned to the vendor for reworking. The first pump was resubmitted in June and speed tests have been started.

6. Electrical

Methods and procedures for installing the electrical system were reviewed and approved.

Secondary distribution sections for the variable voltage substations were received. Primary switchgear is expected to arrive on schedule. Acceptance tests of the regulator-transformers to be used in the substations were conducted and the units met or exceeded electrical specifications. Subcontract modifications are under way to furnish temporary protection to the substations for operation prior to the availability of a permanent 12 kV system. Substations V1-A and V1-B will be protected by an oil circuit breaker; substations V-2 through V-9 will incorporate an automatic tripping feature in one of the two high voltage switches furnished with each unit.

7. Auxiliary Machine Shielding

A dummy penetration with services was set up in the vacuum laboratory to allow demonstration of contemplated methods of shielding. A penetration air stop diaphragm design has been established, and two prototype models are ready for fabrication.

8. Electronic Systems

The cable plant instrumentation and control installation package for Sectors 1 and 2 was approved. The first battery set to be used in the battery plant arrived and will be tested during the next quarter. Battery chargers should also be ready for acceptance testing at this time. A time-and-materials contract was awarded for the assembly and

wiring of racks for Sectors 1 and 2, and work started in June. Public address equipment was delivered for the first three sectors; system components are undergoing test and evaluation prior to installation. Telephones were installed in the injector (west) end of the Klystron Gallery and were connected with the main SLAC switchboard.

B. ACCELERATOR INSTALLATION

1. Schedules

Electrical and cooling water subcontractors were granted a time extension for completion of Sectors 1, 2, and 3; these time extensions are compatible with the Sector 1 test schedule. Notice to proceed with subcontract work in Sector 1 was given to the vacuum system subcontractor.

2. Subcontracts

The respective subcontracts for heat exchangers and pumps are proceeding satisfactorily, with 17 heat exchangers and 34 pumps received to date. Subcontracts for the installation of the cooling water systems and the electrical services have reached the following percentages of completion:

	Cooling Water Systems Installation: Percent Complete	Electrical Services Installation: Percent Complete
Main Injector	83	5
Sector 1	85	88
Sector 2	50	65
Sector 3	25	30

Variable voltage substations V1-A and V1-B were received with the exception of the low voltage bus duct tie. Temporary connections will be made for Sector 1 tests.

C. BEAM SWITCHYARD

A scoping report on the vacuum system pumping stations was prepared for project review. Prototype work on the differential pumping system was completed. The gauge evaluation program is proceeding. Engineering

on the prototype of the fast-acting valve, divergent vacuum chamber, and instrument beam dump continued.

The final criteria for the magnet cooling water system were decided. Radioactive cooling water systems have been under study during the quarter. In particular, the possible need for retention tanks at the collimator, slits, and End Station A beam dump heat exchangers was investigated. Radiation calculations revealed that the long-term water activity levels were a minor factor, and it was therefore decided that the tanks will not be installed.

Arrangements were completed to extend the accelerator alignment pipe into the beam switchyard. Additional support jacks and jack hardware are being procured.

IV. ACCELERATOR PHYSICS

A. INJECTION

1. Main Injector System

The scale model of the main injector klystron gallery has been completed.

The injection instrumentation racks will consist of standard project racks with slight modifications. These modifications will provide maximum cabling space and will facilitate the installation of cable patching equipment. This patching system will enable changes in equipment installed in the racks to be made without a change of the rack wiring, thereby minimizing accelerator down-time and giving maximum flexibility.

The water system is being installed and is essentially completed. The electrical system contract has been awarded. The vacuum system is being sent to the contractor by Systems Engineering and Installation. Primary effort in the forthcoming quarters will be concentrated on the injector components, control instruments, and waveguide layouts.

2. Off-Axis Injector System

The scale model depicting the off-axis injector alcove and the accelerator housing is in progress and is expected to be completed by August 1964.

The waveguide vacuum design is completed. Electrical and water layouts are in the preliminary design stage.

The schedule for the off-axis injector is now being revised for turn-on prior to the main injector. This change of schedule is planned to facilitate testing of the inflector system in place rather than in the Mark IV accelerator as previously planned. Priority is now shifted to step up design in the off-axis injector, to enable beam turn-on in the summer of 1965.

3. Inflector System

The supports and girder for the inflector system including the off-axis injector are being designed with the collaboration of the Mechanical Design and Fabrication group. The s-quadrupole magnet requires further bench test and corrections. The bending magnets will be assembled and tested in the coming quarter in parallel with the design effort on the support and alignment of this system.

4. Electron Guns and Modulators

a. Electron Gun Design

Some preliminary high-voltage breakdown tests were done on a ceramic cylinder 6 inches long. These tests confirmed that it would be necessary to use a ceramic envelope 8 to 9 inches long in order to maintain an adequate safety factor. Orders for cathodes and ceramic envelopes have now been placed and delivery is scheduled during the next quarter.

Mechanical design of the assembled gun has been completed, and drafting work on individual components is proceeding.

This gun design has the following features:

(1) Control grid capable of varying the perveance from zero to 0.1×10^{-6}.

(2) A separate beam focusing electrode for maintaining beam optics over the perveance range.

(3) A 50-ohm coaxial feeder passing through the vacuum envelope and up to the grid, to facilitate short pulse beam modulation.

(4) A carburized, thoriated, tungsten cathode, bombardment-heated.

(5) Demountable construction, permitting quick replacement or redesign of any component.

In order to facilitate initial testing, the first gun will not have the beam focusing electrode separately connected.

Using a two-dimensional conducting paper analogue, the electric field distribution through the ceramic envelope wall has been plotted for various positions of the internal corona shield. The field plots show that the design is conservative, and that there is no chance of voltage breakdown through the ceramic.

b. Existing Guns

Gun Model 1-1 continues to be used on the Mark IV accelerator. Quantatron Gun Model 2-2, after failure, had its cathode recoated and is being used on the Injection Test Stand. A new stem is being procured for Hughes Gun 3-1.

c. Manson Modulators

The first Manson Modulator, Model 4-1, passed all acceptance tests except for grid pulse shape. The second Manson Modulator, Model 4-2, is undergoing in-plant acceptance tests, and it has been agreed that the

improvements in pulse shape obtained in this second model will be incorporated at SLAC in the first model.

5. Injection Test Stand

During most of the quarter, the Injection Test Stand was shut down because of a water-vacuum leak which contaminated the vacuum system. The system had to be completely disassembled and cleaned. The enforced shutdown period was used to make some changes in the Test Stand hardware. These are described below:

a. Vacuum System

The diffusion pumps and manifold system were removed because of poor reliability and difficulties in maintenance. The diffusion pumps were replaced by a set of ion pumps connected directly to the pumpout points in the system. Total ion pumping capacity is now 279 liters/sec with pumps distributed as follows:

Klystron window pumpout	20 liters/sec
Accelerator and waveguide pumpout	100 liters/sec
Sweep tank pumpout	100 liters/sec
Gun differential pumpout	50 liters/sec
Gun valve pumpout	9 liters/sec

A pair of liquid nitrogen trapped forepumps were also installed to rough-pump the system.

b. Beam Analysis Subassembly

One of the water-cooled beam slits in the assembly melted while intercepting a two-amp, 60-pps beam, causing the vacuum-water failure mentioned above. Examination showed that a plugged water tube probably restricted cooling water flow enough to allow the beam to burn through the copper wall of the slit. The plugging material was brazing alloy used in the construction of the slit. In rebuilding the assembly, solid stainless steel beam slits were used with water cooling at the edges.

c. Vacuum Monitor System

Positions of the ion gauges were changed and a double ion gauge pumpout was installed at the accelerator input. The double ion gauge is used for interlock purposes, with one gauge monitoring normal running pressures and interlocking such functions as klystron modulator, gun pulse, etc. The second gauge is set to monitor at forevacuum pressure levels to detect

large vacuum faults. These in turn will remove power from the gun filament and sound an alarm.

d. Beam Sweeper and Sweep Tank

A fluorescent screen was fabricated and installed in the sweep tank upon reassembly of the system. Steering coils for the sweep tank were fabricated and are being installed.

The repairs and modifications to the test stand are now practically complete. During the next quarter, the test stand will be run to obtain precise electron bunch size information.

6. Beam Knockout

The final decision to use a subharmonic resonance knockout system rather than a video pulsed system has been made. The subharmonic resonance knockout technique sweeps the beam at the 72nd subharmonic of 2856 Mc/sec. Electron bunches occurring at the two zero crossings of each subharmonic cycle are undeflected, and hence are transmitted through the accelerator. This gives a single electron bunch every 36th cycle of the 2856 Mc/sec drive frequency. Driving the deflectors directly with the 72nd subharmonic (39.667 Mc/sec) requires large deflecting cavities, and high power phase stable sources of the 72nd subharmonic. This method appears quite feasible.

A different technique producing the same results was suggested by Dr. R. Helm, and it is briefly described here. Consider the 2856 Mc/sec accelerator frequency as the 72nd harmonic of 39.667 Mc/sec. Let the beam be consecutively swept by two frequencies corresponding to the 71st and 73rd harmonics of 39.667 Mc/sec. With sweeps properly phased, the resulting deflection of electron bunches is shown in Fig. 6 . Also shown is the deflection undergone by electron bunches in a 39.667 Mc/sec sweeping field. Note that the deflecting fields for the two systems in the vicinity of the transmitted bunch are about the same.

Both systems give equivalent beam knock-out results. Further study as to relative costs and ease of fabrication of the deflectors will determine which of the two systems will be used.

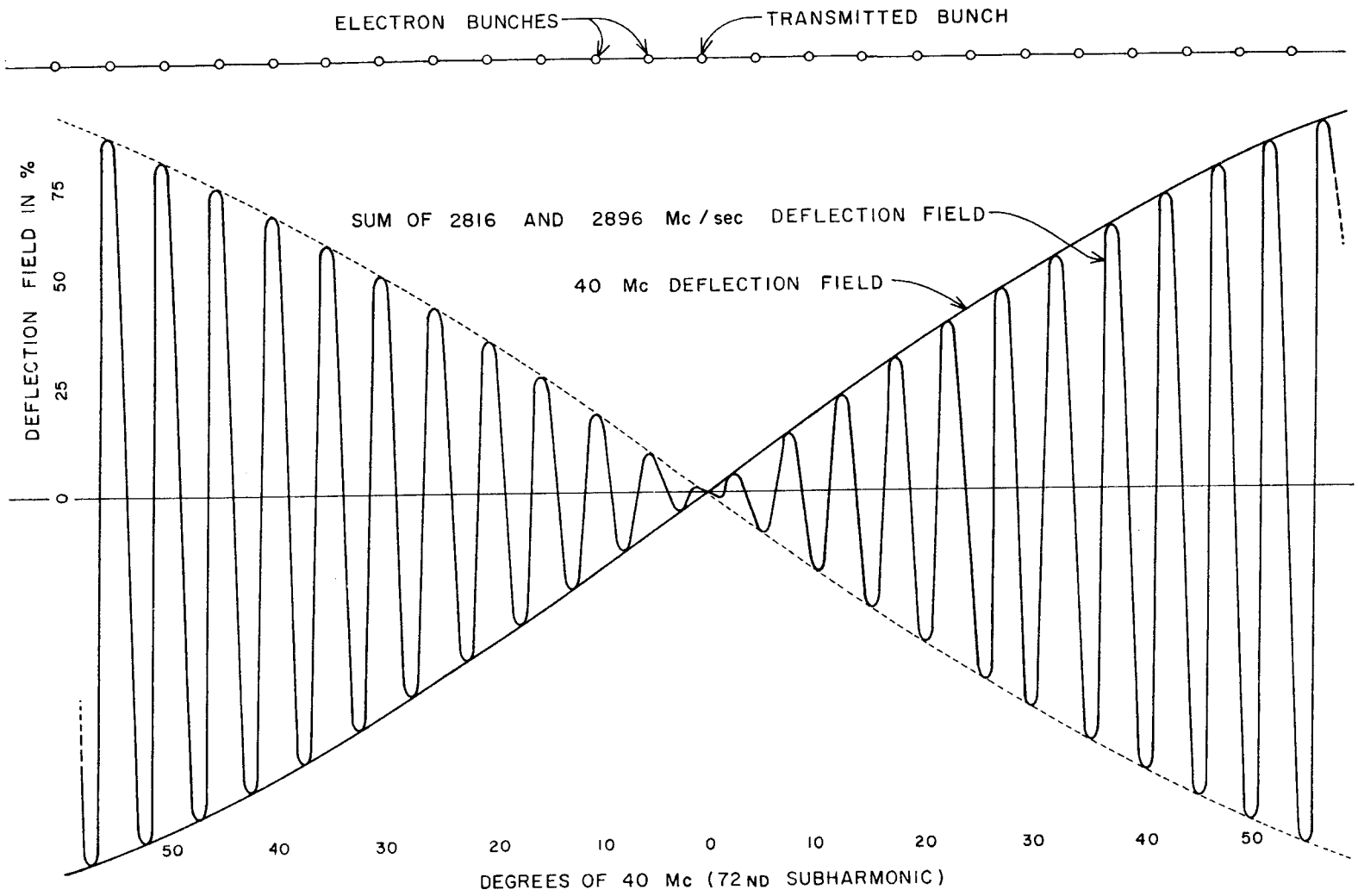

FIG. 6-SUBHARMONIC BEAM KNOCKOUT SYSTEM
COMPARISON OF 40 Mc DEFLECTION SYSTEM WITH 2816-2896 Mc
BEAT FREQUENCY DEFLECTION SYSTEM

127-1-A

B. DRIVE SYSTEM

The overall status of the Drive System is outlined below.

1. Main and Subdrive Lines

Sectors 1 and 2 of the Drive Lines have been delivered to SLAC, tested, installed in the klystron gallery, and retested. The test results show that the Drive Lines meet performance specifications, and the supplier was notified to proceed with the rest of the order. Several minor modifications were suggested to improve the drive line performance and to facilitate installation.

Orders have been placed for auxiliary equipment that connects the rf generators to the drive lines, i.e., flex sections, switches, and short line sections. This equipment is expected to arrive early next quarter.

A slab line directional coupler was designed. The design can be used for any coupling value and can be adapted to any size coaxial line. The purpose of this design is to enable SLAC to construct replacements for the drive line couplers. Most of these couplers are not "off-the-shelf" items.

A "Digital Phase Meter and Phase Vernier" was constructed. Its main purpose is to measure the group delay of the drive lines. The device contains two 500 kc/sec amplifier-limiters, each followed by an X60 multiplier. A synchronous detector measures the phase difference between the X60 multiplier output signals. If the device is used as a microwave phase indicator where the phase measurement is done at an IF frequency, it can yield a null at 3° intervals. Thus any microwave phase shifter can be calibrated at discrete points with an accuracy equal to the resolution of the phase meter, which is better than 0.01°. A phase shifter at 500 kc/sec that resolves each 3° is being designed.

Phase versus pressure test data indicates that the phase varies by 0.02 /psia/foot. A variation of ±0.01 psia will cause a 2° change in phase shift between the beginning and end of the Main Drive Line. Therefore, the pressure regulation for the Main Drive Line has to be better than ±0.01 psia. Such regulators are available and are relatively inexpensive.

2. Varactor Frequency Multipliers

Acceptance testing on six frequency multipliers has been completed. All six units have met specifications, and two of the units have been

operated from the main booster amplifier for about 1200 hours with no degradation of performance.

During the quarter a paper entitled "Phase Stability of Varactor Frequency Multipliers," by Roger McConnell, was delivered at the PTGMIT International Symposium, summarizing the results of phase stability measurements made on varactor frequency multipliers at SLAC.

It has been determined that a substantial part of the phase variations observed when operating the multipliers off the main booster amplifier are the result of radiofrequency interference generated in the vicinity of the Test Stand Modulators, and possibly by the Test Stand Drive System. This RFI can be attacked on at least three fronts:

a. Elimination of RFI at the source.

b. Shielding of the varactor multiplier (which will be accomplished by the installation of the multiplier in the sub-booster modulator rack).

c. Changing the multiplier bias supply from high impedance to low impedance.

3. Main Booster Amplifier

Acceptance testing of the two main booster amplifiers has been completed with both units meeting their specifications. About 700 hours of full power operation have been obtained with each unit. Unit No. 1 has accumulated an additional 1000 hours at 12 kW output. Lack of facilities has prevented testing the amplifiers at elevated temperatures, but during June in an ambient temperature of 96°F, the following malfunctions were observed:

a. The high voltage breaker tripped three times.

b. The fuse on the regulator screen supply blew.

c. The output power went outside the ±0.1 dB specification.

The above factors indicate that minor rework may have to be done on the units to enable them to meet the ambient temperature specifications.

In addition, it has been observed that daily cyclical variations in output power occur, apparently as a function of temperature. These variations are within specification for usual temperature variations, but they can probably be reduced by such simple measures as eliminating some flexible coaxial cable runs in the rf feedback loop and by improving the

regulation of a 12-volt reference supply in the feedback loop. It is possible that water temperature variations in the laboratory water system are partially responsible for the observed fluctuations.

Preparations are underway to move one of the main booster amplifiers to the accelerator injection area prior to the start of sector tests; this will provide an opportunity to test the amplifier with temperature regulated water, as soon as the water system in the injection area is functioning.

4. Sub-Booster Modulator

Phase measurement equipment has been purchased, assembled, and tested, and it appears to be capable of satisfactory performance in measuring amplitude ripple and drift of the sub-booster modulator voltage pulse. This equipment and two sub-booster tubes will be shipped to the modulator supplier.

5. Master Oscillator

The contract for three master oscillators and a frequency synchronizing system has been let. The first two bi-weekly progress reports have been submitted; these reports and a tour of the manufacturer's facilities indicate that the project is on schedule.

6. Positron Phase Shifter

It has been decided to make it possible to accelerate positrons or electrons from Sector 11 on a pulse-to-pulse basis. For this reason, electronically actuated phase shifters will be procured rather than the slow acting phase shifter in series with the main drive line that was originally planned. The best solution is to add switchable ferrite circulator phase shifters to the respective Isolator-Phase Shifter-Attenuator packages.

7. Drop-Out Cables

The contract for the drop-out cables has been awarded. The inner conductor of this cable is supported by a foam dielectric and its outer conductor is aluminum tubing. The cable has low attenuation and better phase versus temperature stability than other semiflexible cables in which the space between inner and outer conductors is completely filled with a solid dielectric.

8. Power for RF Separators

The problem of providing rf power at End Station B was considered. A 1-5/8-inch or 7/8-inch semiflexible coaxial line in conjunction with an automatic phase control seems to be the most suitable method. This line would be connected to the end of the two-mile drive system.

C. PHASING SYSTEM

1. Acceptance Tests on Isolator-Phase Shifter-Attenuator Units

Acceptance tests on the pre-production of twenty-five of these units and five control phase shifters have been completed. The isolator-phase shifter-attenuator units met SLAC specifications with four exceptions. The most serious of these entailed a redesign of the protection attenuator control circuit. All units have been revised to the new design. The second exception concerns the phase shift as a function of temperature. A phase compensating element to be connected in series with the units is being developed. These compensating elements will be supplied for addition to the pre-production units at SLAC, and will be incorporated in all production units. The remaining two exceptions are less serious, but will be rectified in the production run. Sector simulator tests indicate that the modified units will be entirely satisfactory. The production run will begin next quarter.

2. Sector Simulator Tests on the Automatic Phasing System

Twenty of the isolator-phase shifter-attenuator units and three control phase shifters have been tested in the sector phasing simulator, together with two detector panels, two programmers, and two electronics packages. It was found necessary to redesign the servo amplifier and reference voltage generator because of the power requirements on the two-phase motors in the Sperry units. After this was done, the automatic phasing system worked satisfactorily. Repeated automatic rephasing on one klystron channel (keeping the phase of the simulated beam-induced wave constant) showed that the klystron phase shifter returned each time to the same phase setting within ±1.5 degrees. The system can complete the automatic phasing of one sector (from the maximum initial error of 180 degrees on each klystron) in one minute. The programmer was locked into operation so that the sector automatic phasing cycle was repeated more than 4000 times, and no fault developed.

3. Procurement of RF Detectors, Programmers and Electronics Packages

Drawings and specifications of these units are being completed so that procurement can be initiated.

4. Linear Detector Design

The design of the thermionic diode detector housing has been modified to reduce the input VSWR to below 2:1.

5. Beam Analyzing Stations

Drawings for the beam analyzing stations for the in-line and off-axis injectors are being prepared for internal approval. The drawings cover the foil box assembly, window, beam dump, vacuum pipe, vacuum adapters, and devices for the alignment and support of these components. The magnet for the main injector has been ordered.

6. Temporary Analyzing Station for Sector 1 and 2 Beam Tests

A magnet with rotated pole faces is being studied for this station.

7. RF Reference Cavity (Preceding Position Monitor Cavities)

After maximizing R/Q, using a demountable experimental cavity, a prototype was assembled, brazed, and tested under vacuum on the Mark IV accelerator. The design has now been finalized, and an internal report has been prepared.

8. Theoretical Work on the Behavior of a Nonsynchronous Constant-Gradient Section

A study on this subject is underway.

9. Drift Section Beam Position Monitors

The design of the microwave beam position monitoring system to be used in the standard and special drift sections along the machine has been completed. Two rectangular TE_{102} position cavities and one cylindrical TM_{010} intensity cavity are employed for measurement of vertical and horizontal beam displacements, as shown in Fig. 7 . A detailed description of the system will be given in a separate report.

The monitor is required to indicate the position of a 1-mA to 300-mA beam to within 0.5 mm near the center of the beam aperture. Tests of prototype position and reference cavities, carried out using the Mark IV accelerator, have shown that the system will meet the above accuracy

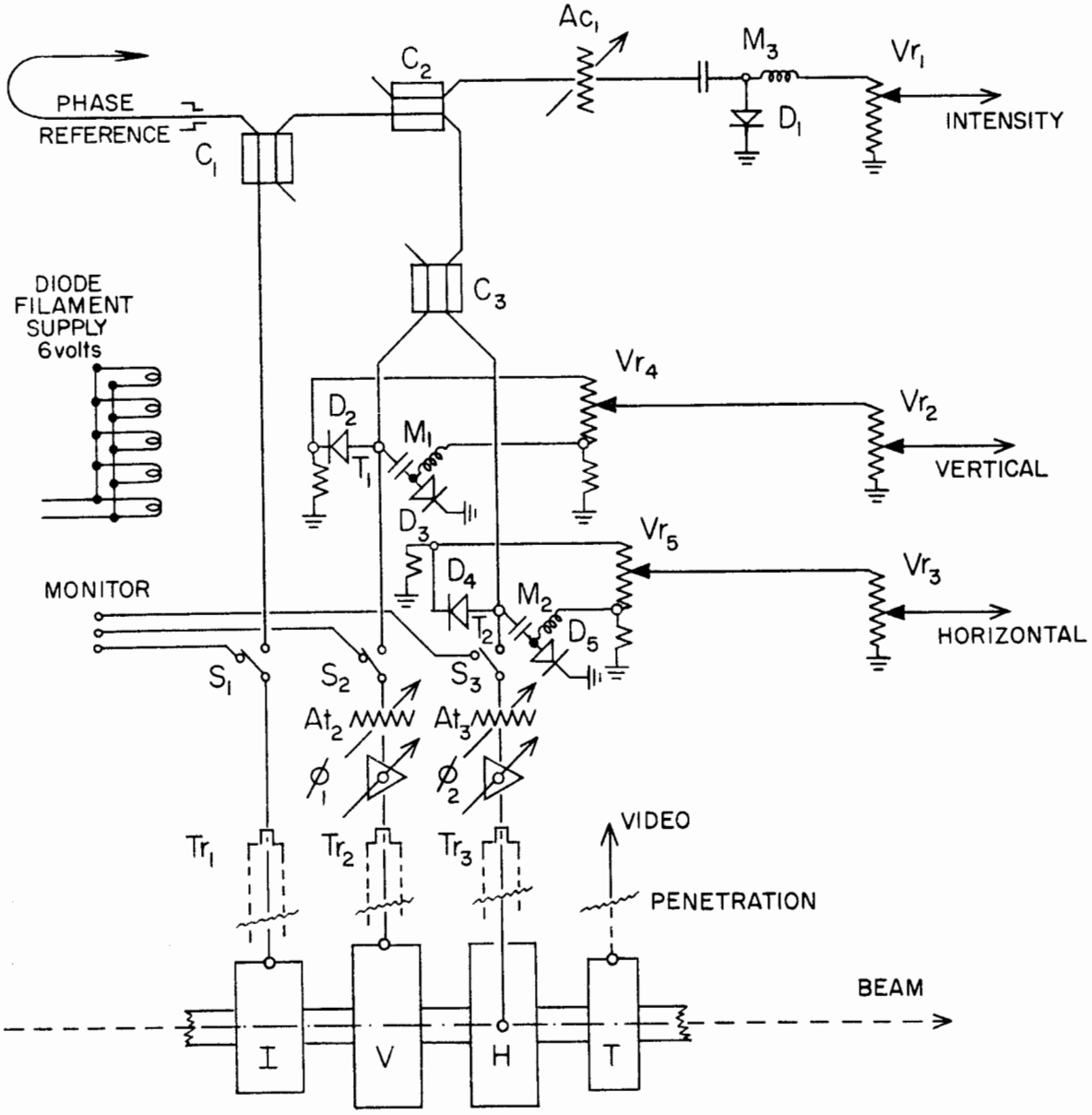

127-2-A

FIG. 7 - SCHEMATIC FOR BEAM POSITION MONITORING SYSTEM IN THE DRIFT SECTIONS

and sensitivity requirements. In further Mark IV tests, the electronics package used to obtain suitable charge and displacement signals for transmission to central control has proved to operate satisfactorily when driven by the linear detector outputs obtained from the microwave system.

The final mechanical design of the cavities has been completed, and fabrication of three prototype cavities is now proceeding.

10. Switchyard Beam Position Monitors

A resonant ring beam position monitoring system has been proposed for use in the beam switchyard. Monitors indicating respectively horizontal and vertical beam displacements in a 1-1/2-inch diameter aperture, and horizontal displacement only in a 3-inch wide by 1-3/4-inch high aperture are required at various locations in the BSY.

A resonant ring which has been built for use at the more difficult 3-inch by 1-3/4-inch aperture position is shown in Fig. 8 . Standard S-band waveguide is used, with shields around the beam apertures to minimize power losses that reduce the Q of the ring. Tests using the Mark IV accelerator have shown that this resonant ring will provide beam position information over the required aperture. However, further changes in the shielding of the apertures may result in a higher output, owing to an increase in Q and to better coupling to the beam.

D. GENERAL MICROWAVE STUDIES

1. RF Separator

During the past quarter, a paper summarizing the present work was presented at the yearly PTGMIT Meeting. Its title is "Properties and Applications of the TM_{11} Mode in Cylindrical Disk-loaded Waveguide," by O. H. Altenmueller, R. R. Larsen and G. A. Loew. In addition to giving results on rf separators, it also discusses beam position monitors and the phenomenon of beam break-up.

2. Coupler Asymmetry

After a series of experiments on the beam dynamics obtained with the new constant-gradient sections in the Mark III accelerator, it was decided to review once more the problem of coupler asymmetry by means of microwave perturbation measurements. A detailed examination of the problem revealed that there are both amplitude and phase asymmetries in the transverse

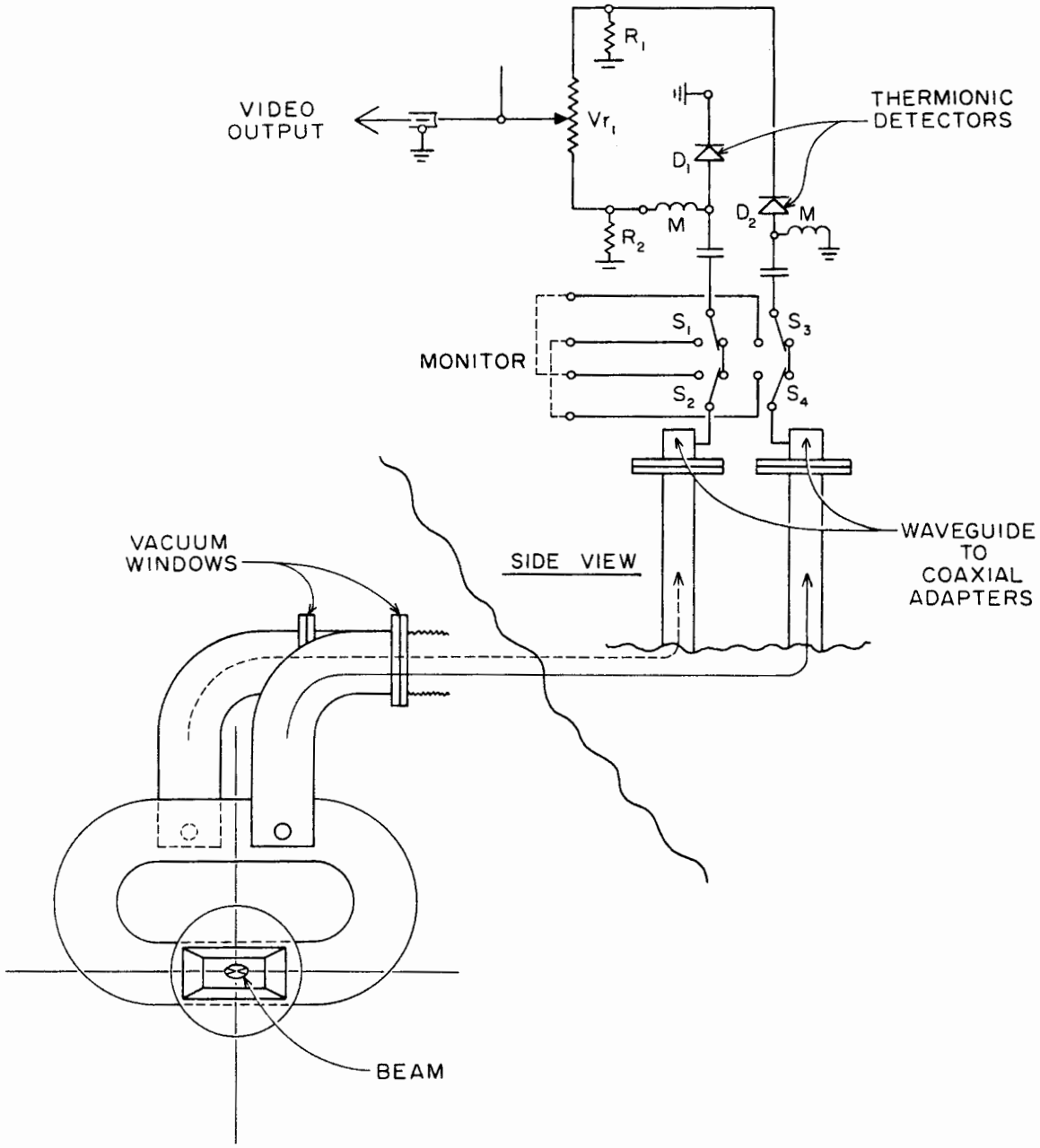

FIG. 8 - SCHEMATIC OF RESONANT RING SYSTEM TO BE USED AS A BEAM POSITION MONITOR IN THE BEAM SWITCHYARD

127-3-A

plane of a coupler cavity. Referring to Fig. 9a, it can be seen that any variation of E_z along the x-direction will be equivalent to a magnetic field in the y-direction, B_y. This field in turn will create a Lorentz force in the x-direction responsible for deflecting the electron beam transversely every time it passes through a coupler cavity. The respective phases of these two asymmetries can be understood from the reasoning given below:

Let E_z be of the form

$$E_z = E_{z,o}\,(1 + \epsilon x)e^{-j\delta x}$$

where ϵ and δ give the linear amplitude and phase variations in the x-direction. Then, to first order,

$$\frac{\partial E_z}{\partial x} = -\,jE_{z,o}\,\delta e^{-j\delta x} + \epsilon E_{z,o}\,e^{-j\delta x}$$

The magnetic field B_y and the Lorentz force F_x are in time quadrature with these expressions. This fact is illustrated in Fig. 9b. It is seen that F_x'', the deflecting force caused by the amplitude asymmetry, is in quadrature with F_z, the accelerating force, and thus has a transversely debunching effect for a bunch traveling on the crest of the wave. On the other hand, F_x', the deflecting force caused by the phase asymmetry, is in phase with F_z and hence has a deflecting effect for a bunch traveling on crest. It can be shown that if each coupler has an asymmetry greater than 0.1% over the radius of the disk hole, undesirable steering difficulties can arise over the two-mile length. This gives values of

$$\frac{\Delta E}{E} = a\epsilon \leq 0.1\%$$

$$a\delta \leq 0.06^{\circ}$$

Because of the difficulties in obtaining and measuring asymmetries below these tolerances, it has been decided to alternate the directions from which the successive accelerator sections are fed by the rectangular

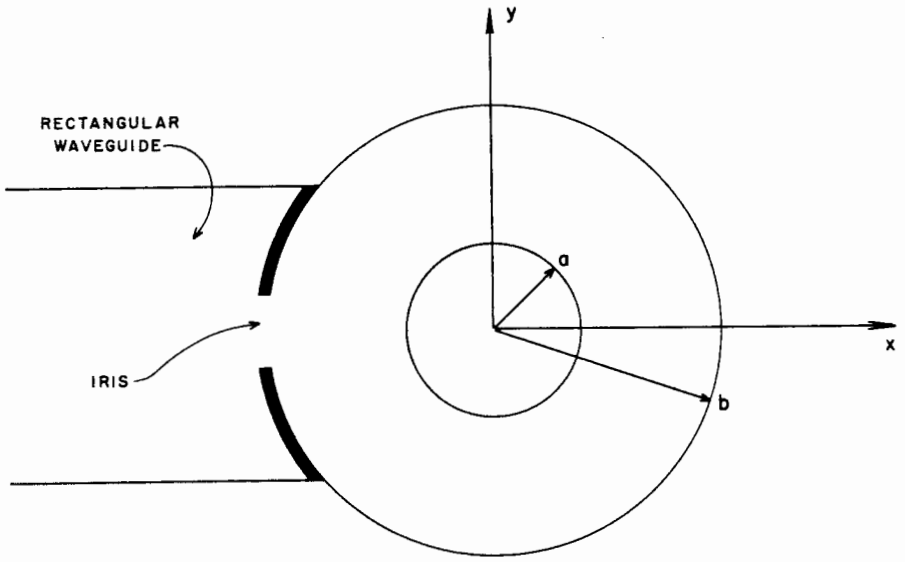

a.) CROSS SECTION OF COUPLER CAVITY

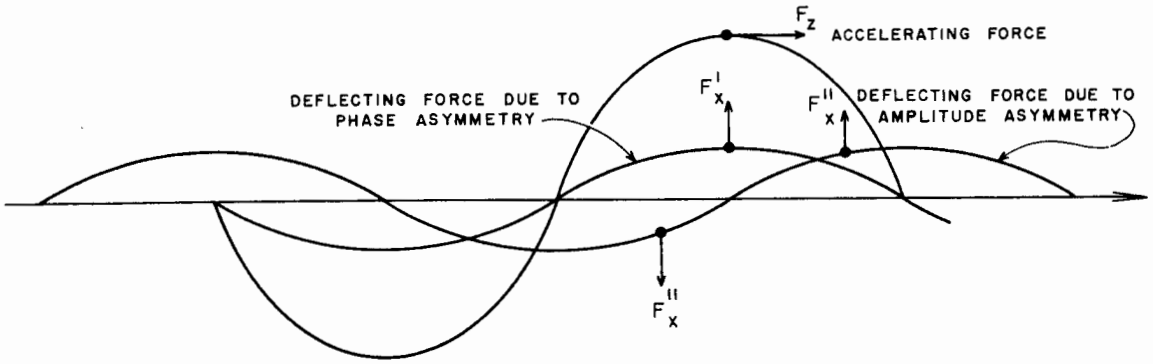

b.) FORCE COMPONENTS DUE TO AMPLITUDE AND PHASE ASYMMETRY IN THE COUPLER CAVITIES

FIG. 9 - EFFECT OF LONGITUDINAL ELECTRIC FIELD ASYMMETRY IN THE COUPLER CAVITIES

127-4-A

waveguide. In addition, in order to reverse the sign of δ between input and output couplers in a given section, it has been decided to couple in and out of a section on the same side. These decisions are discussed elsewhere in this report. Further research is being done to discover whether it is possible to cancel both asymmetries by slightly modifying the geometry of the coupler cavity.

E. OPTICAL ALIGNMENT SYSTEM

1. Traget Design and Procurement

A request for proposal was submitted to sixteen potential fabricators of SLAC alignment targets. The accompanying specifications detailed two procedures for the fabrication of the master patterns. One method called for the individual ruling of each pattern; the second method permitted the fabricator to use photographic enlarging and reducing to scale of various patterns from an original ruling.

A total of 120 different large patterns are required for the 271 targets along the length of the accelerator. By adjusting the position of the focus in the alignment end station, it is possible to obtain the maximum number of symmetric target positions at either end of the accelerator. Those targets that are designed as a compromise for more than one target position always give at least 80% of optimum alignment sensitivity.

F. MAGNETIC SHIELDING

A contract was signed for the procurement of shielding for the accelerator.

G. MAGNETIC INTERFERENCE

A program of checking for magnetic noise and interference in the accelerator housing was established. First measurements showed no fields greater than about one milligauss. The measurements will be repeated as various pieces of high power equipment are installed and tested as part of the sector test program.

V. INSTRUMENTATION

A. GENERAL

The work reported here was performed by the Instrumentation and Control and the Light Electronics groups.

B. DATA HANDLING

Equipment specifications were prepared for the Status Monitoring subsystem, the Beam Shut-Off subsystem, and for the frequency modulation transmission portion of the Beam Monitoring subsystem.

Proposals were received for the Status Monitoring equipment, and it is expected that a contract for procurement of this equipment will be negotiated during the next quarter. Procurement contracts for the other specified equipment should also be negotiated during the next quarter.

A two-mile, 50-pair telephone cable was installed on poles adjacent to the accelerator site, and transmission tests are being conducted on this facility.

Prototypes of the Remote Control subsystem relay switching centers were constructed in-house and are undergoing extensive testing.

A description of the technical features of the integrated Beam Monitoring subsystem is being prepared.

A compilation of the wire pairs presently needed for long-haul data transmission and for voice communication was updated during the quarter. This document will be used in the final determination of the size of the long-haul cable plant.

C. BEAM GUIDANCE

During the past quarter, preliminary engineering design work on the beam guidance monitoring system was completed. The electronics system associated with the microwave beam position monitor — in an essentially final form — was tested on the Mark IV accelerator, and the results were satisfactory. A few minor modifications in the circuitry have been made as a result of the tests.

A preliminary baseband telemetry system report, dealing with the transmission of lnQ (beam charge), x- and y-position information from the sectors to Central Control, was issued, based upon experimental work. Work on a unit to display this information at Central Control commenced.

Specifications for the quadrupole, dipole, and degaussing coil power supplies were completed, and an invitation to bid was sent out. Work on the circuitry for remotely controlling the output current of these supplies continued.

Experiments were carried out for the purpose of measuring and reducing the noise picked up by shielded cable in the noise environment of the prototype modulators in the Test Laboratory. In particular, it was found that putting the cable inside a copper tube reduced the video pick-up in a 30-foot transmission cable to below 50 microvolts rms when the cable was adjacent to the modulator. Further work on this problem is being done.

D. TRIGGER SYSTEM

Work was directed toward designing, testing, and packaging all trigger system components necessary for a complete test in Sectors 1 and 2. These components are the sequence generator, rate selector, master trigger generator, sector takeoff transformer, and sector trigger generator. Most of these units are completed and ready for installation; all will be ready in time for the Sectors 1 and 2 tests.

The following subsystems remain to be completed: portable rate generator (circuit design complete), comparator, pattern generator, injector trigger generator, and trigger generator for the beam switchyard pulsed magnets and for the experimental areas.

E. MODULATOR-KLYSTRON PROTECTION SYSTEM

Two modulator-klystron protection panels and associated plug-in modules have been tested at the test stands. The system as a whole will be retested extensively during the early Sectors 1 and 2 tests and will then undergo a final review.

F. PERSONNEL RADIATION PROTECTION SYSTEM

Criteria for the protective system have been established. Entry to radiation areas will be controlled by the Operations Officer at the Central Control Room. He will determine when it is safe to admit personnel to radiation areas, and will control their entry by remotely releasing a key to them from a "keybank" adjacent to the locked entry door to be used. The door to occupied radiation areas will either be continuously guarded, or else the area will be searched after occupancy to make sure that no one has been left inside.

The chief method for insuring that no beam can be accelerated while persons are in susceptible areas will be to "interlock off" the high voltage to the modulators with the keybanks and door switches.

Design of the keybank for radiation areas has begun, and the long-haul cable requirements for the interlock system have been laid out.

G. SIGNAL CIRCUIT DOCUMENTATION

The basic circuits for the following instrumentation and control functions have now been drawn and given to the Systems Installation Group:

1. Modulator-Klystron Protection System
2. Water System
3. Vacuum System
4. AC Power System (Conventional and Variable Voltage)
5. Automatic Phasing System
6. Beam Guidance System
7. Mode Switch Control Logic – Klystron Replacement System
8. Trigger System

H. CENTRAL CONTROL

The main control console for Central Control has been assembled in the Electronics Building, and mockup panels have been installed for most of the instrumentation. Considerable progress has been made in the method of presenting information to the operator.

Work has begun on the development of special CRT indicator units to present profiles of beam intensity and beam position information sector-by-sector.

I. MACHINE RADIATION PROTECTION

The decision has been made to make initial installation of two separate radiation detectors in the Accelerator Housing:

1. The coaxial cable type of continuous ionization chamber.*
2. A set of discrete ionization chambers to detect radiation at the beam scraper in each sector.

Both systems will be tried out in Sectors 1 and 2, and results will show whether either or both should be used in the whole machine.

---

*"Two-mile accelerator project, Quarterly Status Report, 1 October to 31 December 1964," SLAC Report No. 27, Stanford Linear Accelerator Center, Stanford University, Stanford, California (February 1964); p. 52.

VI. HEAVY ELECTRONICS

A. MAIN MODULATOR

1. Modulator Procurement

The main modulator contract continued to work well during this period. The first of 20 pre-production modulators was delivered two weeks ahead of schedule on June 2, 1964. Three more were delivered one and one-half weeks ahead of schedule on June 22nd.

Two of these modulators were set up in the Test Laboratory for life testing and two were installed in the Klystron Gallery. Those in the Klystron Gallery have been run about two hours each into the prototype pulse transformer tank with a salt water load in place of a klystron.

The only difficulty experienced with these modulators was that one of the motorola high voltage rectifier stacks burned out. The defect has since been remedied by Ling Electronics Company.

2. Prototype Tests

When the first pre-production modulator (Serial No. 2) arrived, prototype No. 2 was transferred to the klystron group, where it has run in a systems mock-up which included a klystron mounted on a sample klystron support structure, rf components, and a fiat rack. Tests in this system, as well as previous tests with a fiat rack connected to this modulator in the modulator area, indicated that there are a few problems in mating the modulator to the fiat rack. It is possible that electrical noise from the modulator may be affecting the fiat rack circuits.

At the end of this period, prototype modulator No. 2 had accumulated approximately 4200 hours of operation. Prototype modulator No. 1 was replaced by Serial No. 3 preproduction modulator after 543 hours of operation.

3. De-Q'ing

During this quarter, efforts to perfect the de-Q'ing system continued. The main problem was the short life in the silicon controlled rectifier (SCR) switching device, in some cases caused by momentary

arc-overs in the charging inductor. The longest-lived switching device to date is the International Rectifier Company's SCR package circuit. This unit was run in prototype modulator No. 1 for 1619 hours, and 881 hours in prototype No. 2. The only difficulty experienced was that a small diode connected in reverse across the SCR burned out on two separate occasions.

It was felt that by going to a 50-to-1 ratio charging inductor, which would drop the voltage on the SCR by one-half and also double the current, one of the inexpensive, readily available, motor starting SCR's might be used. Accordingly, the charging inductor was modified so that by changing taps either a 25:1 or a 50:1 ratio could be chosen. Tests on such a system indicated that these SCR's required more gate voltage, and for a longer period of time, than our triggering system could provide. The regulation of modulator output pulse voltage seemed better with the 25:1 ratio than with the 50:1 ratio. The life of an 800-volt SCR in this circuit was 925 hours at the end of this reporting period.

Other tests on SCR's with the 25:1 ratio system were performed. As of the end of June, an 1100-volt SCR had been run approximately 300 hours in pre-production modulator Serial No. 2 with a diode load on the modulator. This SCR appears to be a good contender.

Another difficulty experienced with the de-Q'ing system was poor regulation. For example, the de-Q'ing system would only compensate for a line voltage variation by a factor of 5. It was found during this period that the voltage divider which attenuates the PFN voltage down to a level where it is fed to the comparator circuit must be properly compensated; the de-Q'ing switch will fire late if the divider is under-compensated, or early, when it is over-compensated. Either a rising or falling regulation characteristic may be chosen by varying the compensation of this voltage divider. When this divider is properly compensated, the above-mentioned factor of 5 increases to at least 20.

4. Switch Tubes

During this period both of our switch tube contractors began to deliver tubes. Both companies experienced troubles with excessive anode delay time variations with varying modulator power levels.

I.T.T. solved the problem by using a pre-trigger electrode and delivered five tubes (two KU 274B's and three KU 275A's). However, these tubes exhibited excessive kickouts when installed in our prototype modulators. After about one hundred hours they aged-in and the mean time between kickouts was about 6 hours. The reason for this appeared to be that the load conditions in our modulators are different from those in their test modulators, which reduced the available recovery time and the inverse voltage during this recovery time. A second set of tubes from this company was rejected for failing to meet the specified mean time between kickouts in SLAC modulators.

General Electric also tried using a pre-trigger electrode to avoid the excessive anode delay time variations of their tubes. They delivered two 7004 tubes which were installed and operated in our prototype modulators. These tubes looked good initially, but after about 200 hours the insulation resistance of the pre-trigger electrode dropped to a low value, perhaps caused by cathode material being deposited on its vacuum seal. As a result, the anode delay time variations increased too much.

5. Pulse Capacitors

The total pre-production quantity of pulse capacitors was received from the sub-contractor during this quarter. The pulse capacitors were installed in both of the prototype modulators and in two test stand modulators to undergo life testing. As of the end of this period, one failure out of 80 capacitors on test had occurred.

6. Pulse Transformer Tank Assembly

All the components in this assembly as well as the cable connecting it to the modulator were contracted, and enough parts were obtained from the contractors to build a complete unit before the end of the quarter.

A prototype tank was built and for the first time mated with an RCA klystron for life testing. After a few initial troubles with water

leaks from the klystron into the tank and "O" ring leaks around the klystron, the unit ran well, except for a problem with the oil expansion tube. In order to allow room for oil expansion, a tube is coiled in the upper part of the tank and vented to the atmosphere. Considerable trouble has been experienced in finding a suitable material for this tube. It is in contact with hot oil, which is very caustic, and almost every substance we have tried is in some degree attacked by the hot oil.

As of the end of June, a type of neoprene rubber had been found which will last approximately 2000 hours in hot oil. However, this length of time is not long enough; it is planned to substitute an all metal silphon bellows expansion chamber which should last 10 years.

B. SUB-BOOSTER MODULATOR

The sub-booster modulator contract was awarded to Manson Laboratories early in this quarter. Frequent liaison with Manson has been maintained; modulators are scheduled to be delivered late in September.

It was decided to build a new sub-booster modulator in-house for early sector testing. As of the end of June, this unit was nearly completed and it incorporates many improvements as a result of our experience with the test stand sub-boosters. It contains three 4PR1000 switch tubes in parallel because it was learned that two tubes in each test stand modulator are not capable of supplying the large current required to charge stray capacitance during the rise time of the pulse. This may also be the reason that the life of these tubes is only 1000 hours.

Another problem with these switch tubes is their voltage hold-off capability. Because the 4PR1000's (30 kV) seemed to be marginal in this respect, 4PR250 tubes (50 kV) were tested. Test results indicated that too many 4PR250's would be required to supply the necessary current to the modulator. However, the manufacturer of these tubes has recently developed a high voltage version of the 4PR1000 tube, the Y364, which is processed to 45 kV. Some of these tubes are now being evaluated in test stand modulators.

VII. MECHANICAL DESIGN AND FABRICATION

A. INTRODUCTION

During the quarter, the Mechanical Design and Fabrication Department completed its move to the Fabrication Building at the SLAC site. By the end of the period all equipment moved was in operation. Also, during the period additional components such as the 40-foot support girders and the standard drift sections came under MDF cognizance and are discussed below.

B. MODIFIED ALTERNATING COUPLER FEED POSITION FOR BEAM SYMMETRY

A major concern of the Department during the reporting period was the modification of the 10-foot disk-loaded waveguide accelerator sections, their 10-foot strongback structures, the rectangular waveguide S-assemblies, and associated tooling to incorporate alternating couplers (operation flip-flop). Because this redesign requirement occurred after most of the accelerator sections for Sector No. 1, or the first 320 feet of the accelerator structure, had been fabricated, tuned, and tested, it was decided that this sector would be installed using the old configuration of disk-loaded and rectangular waveguide. All other sectors will have the flip-flop or alternating coupler arrangement, which is shown in Fig. 10. The background for this modification is discussed below.

1. Background of Flip-Flop

Early studies[1] of the effect of asymmetric couplers indicated that the asymmetry would produce a deflection proportional to

$$\frac{2a}{E}\frac{\partial}{\partial x}\ (E \sin\varphi) = \frac{\Delta E}{E}\sin\varphi + \cos\varphi\ \Delta\varphi$$

where E is the magnitude of the accelerating field in the coupler cavity; φ is the phase angle of the electron, relative to the accelerating crest; 2a is the disk hole diameter; $\Delta E = 2a\,\frac{\partial E}{\partial x}$ is the transverse variation of E across the aperture; $\Delta\varphi = 2a\,\frac{\partial \varphi}{\partial x}$ is the transverse variation in relative phase across the aperture.

---

[1] References for Sec. VII-B will be found at the end of the section.

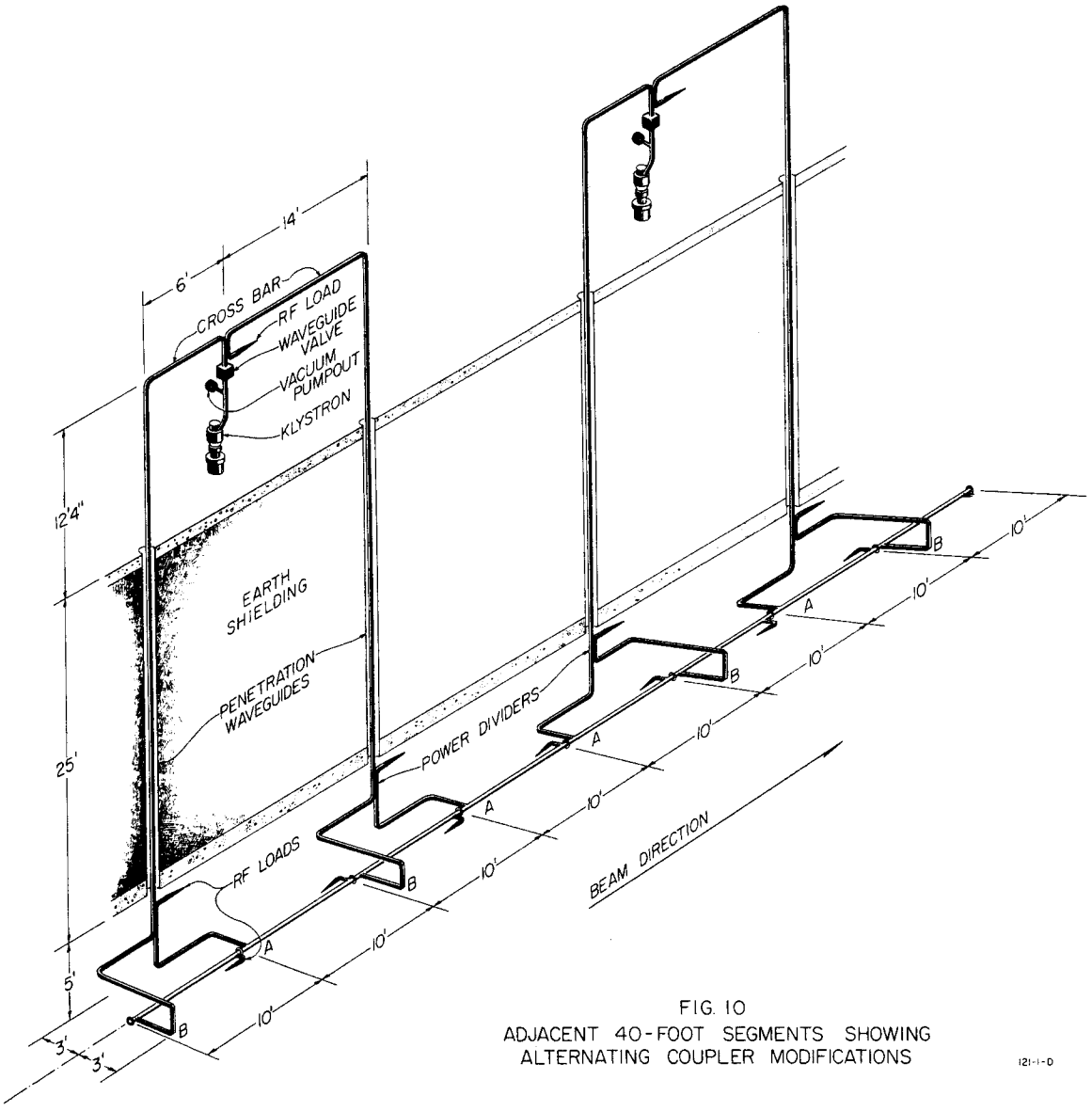

FIG. 10
ADJACENT 40-FOOT SEGMENTS SHOWING
ALTERNATING COUPLER MODIFICATIONS

121-1-D

Note that the effect of the amplitude asymmetry produces a deflection which is in quadrature with the acceleration and consequently induces a beam spread associated with the natural range of phase angles, φ, in the beam bunch. The phase asymmetry effect is in phase with the acceleration and thus produces a net deflection of the entire beam in one direction.

It was shown that amplitude asymmetry of the order of 10%, which had been measured in the old type of couplers, would introduce a very serious spread of the beam. Consequently an effort was made to correct the amplitude asymmetry by offsetting and slightly deforming the coupler cavity relative to the aperture.[2] As a result, a coupler was developed for which $\frac{\Delta E}{E} < 0.1\%$, which probably would be within tolerance according to recent estimates.[3]

However, the phase asymmetry effect was largely overlooked until quite recently, when in the course of re-examination of the asymmetry question it was discovered that the "symmetric" couplers actually have phase asymmetry, $\Delta\varphi$, of several degrees.[4] This turns out to be equivalent to an average, uncompensated, transverse magnetic field on the order of 0.1 gauss. Such a deflecting effect, appearing in powered accelerator sections but not in unpowered sections, would greatly complicate the steering problem and would make multiple beams completely impossible unless pulse-to-pulse steering were employed.

2. Possibilities for Correction

Two possible schemes for compensating the coupler asymmetry are listed below.

a. Pulse-to-Pulse Steering

This system is workable and could be employed if necessary. However, pulse-to-pulse steering presents one serious disadvantage: operational complexity. If automatic klystron substitution is used, the pulsed steering would have to be automated also.

b. Symmetrized Couplers

Several approaches to the development of truly symmetric couplers have been proposed. In addition to the possibility of adapting existing

coaxial or doorknob coupler design, one plausible suggestion is that the coupler cavity be given a certain amount of angular misalignment, "yaw", to balance out the in-phase component of deflection.

Advantages: Symmetric couplers would provide the ultimate in operational and hardware simplicity.

Disadvantages: (1) Existing (coaxial) designs would waste an appreciable fraction of useful accelerator length - on the order of 3 to 4 percent. (2) To insure success, several parallel crash priority efforts would have to be made. (3) The present schedule does not allow time for the development program that would be required in adapting or designing, testing, and tooling a new coupler design.

3. Alternation of Coupler Orientation

This seems to be the only approach which can be adapted with complete assurance of success. Several alternatives have been considered: "abab," "abba," "abab-baba," and "baba-abab." (In the notation used, "a" refers to the original input waveguide design, i.e., feed from the north side; "b" refers to the transposed input waveguide. In both cases, it is assumed that the output waveguides are on the side which causes the least mechanical interference, but otherwise alternated in the same pattern as the input guide.)

a. Abab

Advantage: This is the simplest possible scheme of coupler alternation. All 40-foot assemblies would be identical.

Disadvantage: An initially correctly steered beam may suffer a slight net transverse displacement in going through each consecutive pair of accelerator section.[5] With continuous acceleration this could be corrected by a single steering at the beginning. With multiple beams, a few (pulsed) steering corrections would be sufficient. However, if automatic klystron substitution is used, then interchange of two widely separated klystrons could, under the worst conditions, cause a beam motion approaching a millimeter, which might be detectable. In this case it might be necessary either to introduce pulsed steering which automatically tracked the klystron changer, or else to increase the quadrupole focusing strength.

b. abba

Advantages: (1) This configuration gives complete cancellation of the deflection in every 40-foot assembly. (2) All 40-foot assemblies would be identical.

Disadvantage: It is impossible to avoid at least one interference between the flanges of input and output waveguides in each 40-foot assembly. This would necessitate shortening the length of the accelerator by at least 2 cavities per 40 feet.

c. abab-baba or baba-abab

(Alternate 40-foot assemblies have complementary alternation patterns; therefore, these two systems are equivalent in beam dynamics effects.)

Advantage: This is a compromise between optimum cancellation of deflection, and freedom from mechanical interferences. The cancellation is complete to the extent that adjacent pairs of klystrons always operate at the same power level, and should be very good on the average if no particular effort is made toward exact pairing of klystrons.

Disadvantage: Two different 40-foot assemblies and slightly more complex waveguide systems are required.

As a result of the above arguments it was decided that the "abab-baba" or the "baba-abab" configuration would be used. The final decision between the two alternatives, the "baba-abab" configuration, was based on an engineering study of the cost and complexity of the changeover.

---

1. R. Helm, "A note on coupler asymmetries in long linear accelerators." M-167, Stanford Linear Accelerator Center, Stanford University, Stanford, California (March 1960).
2. e.g., "Two-mile accelerator project, Quarterly Status Report, 1 April to 30 June 1962," SLAC Report No. 1, Stanford Linear Accelerator Center, Stanford University, Stanford, California (August 1962); p. 10.
3. R. H. Helm, "Effects of stray magnetic fields and rf coupler asymmetry in the two-mile accelerator with sector focusing," SLAC Report No. 20, Stanford Linear Accelerator Center, Stanford University, Stanford, California (October 1963).
4. R. Borghi, G. Loew and O. Altenmueller, private communication.
5. M. Sands, "Residual effects with alternating couplers," June 3, 1964 (unpublished).

C. ACCELERATOR STRUCTURES

1. Low Power Rf Tests

During the period, installation of the low-power microwave test facilities in the Fabrication Building was completed. Station No. 1 (tuning) and Station No. 2 (quality control) have been made fully operational, including recent modification of both stations to handle the changes resulting from operation flip-flop (various pipe, waveguide, and strongback configuration changes made during the quarter).

The following features were incorporated:

a. Station No. 1 (tuning)

The controlled water temperature system was modified to overcome the difficulties and delays involved when Stations No. 1 and No. 2 were cut in and out of the system independently. This was accomplished by increasing the pumping, heating, and reservoir capacity of the system and by installing heat radiators as dummy loads (Fig. 11).

An accurate and rapid hydraulic system for indenting the cylinders was developed. This system (Fig. 12) incorporates several metering valves which permit fine control of the indenting plungers. At present the greatest remaining mechanical difficulty is the uncertainty in the spring-back of the copper cylinder wall.

The equipment, for automatically measuring and recording phase deviations, cavity-by-cavity, was finished. A typical plot is shown in Fig. 13.

b. Station No. 2 (quality control)

The water system was redesigned as described under Station No. 1.

A facility for automatically measuring and recording phase deviation and reflection coefficient was developed. A typical phase plot is shown in Fig. 14 and a typical reflection coefficient plot is shown in Fig. 15. This latter information is used to inspect the structures for internal reflections (mismatches), and to indicate cavity-by-cavity attenuation. This is in contrast to previous attenuation measurements which were not ordinarily made under operating conditions.

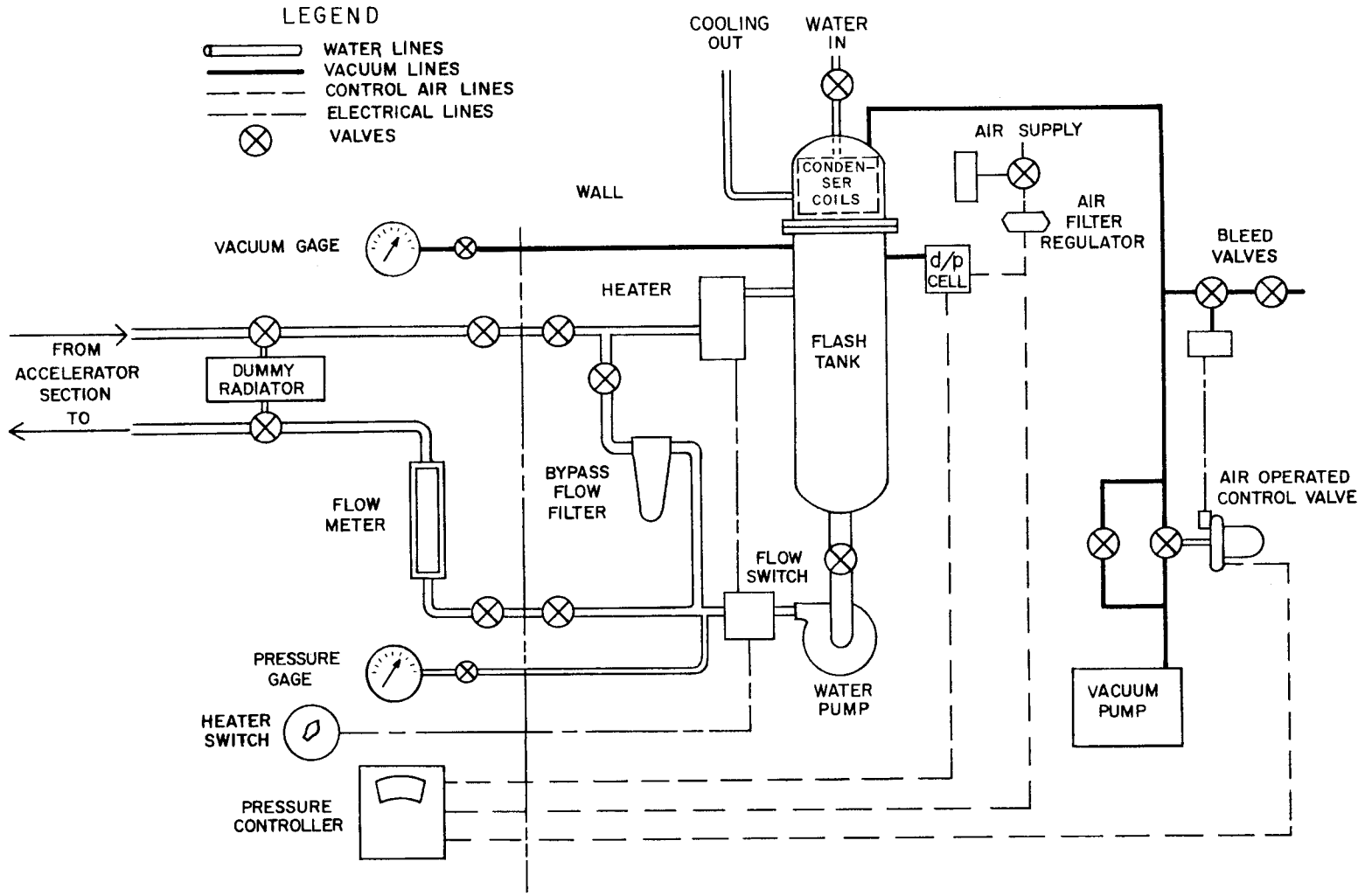

FIG. 11 - SCHEMATIC DIAGRAM OF REDUCED PRESSURE WATER TEMPERATURE CONTROL SYSTEM FOR R.F. TUNING

98-1-B

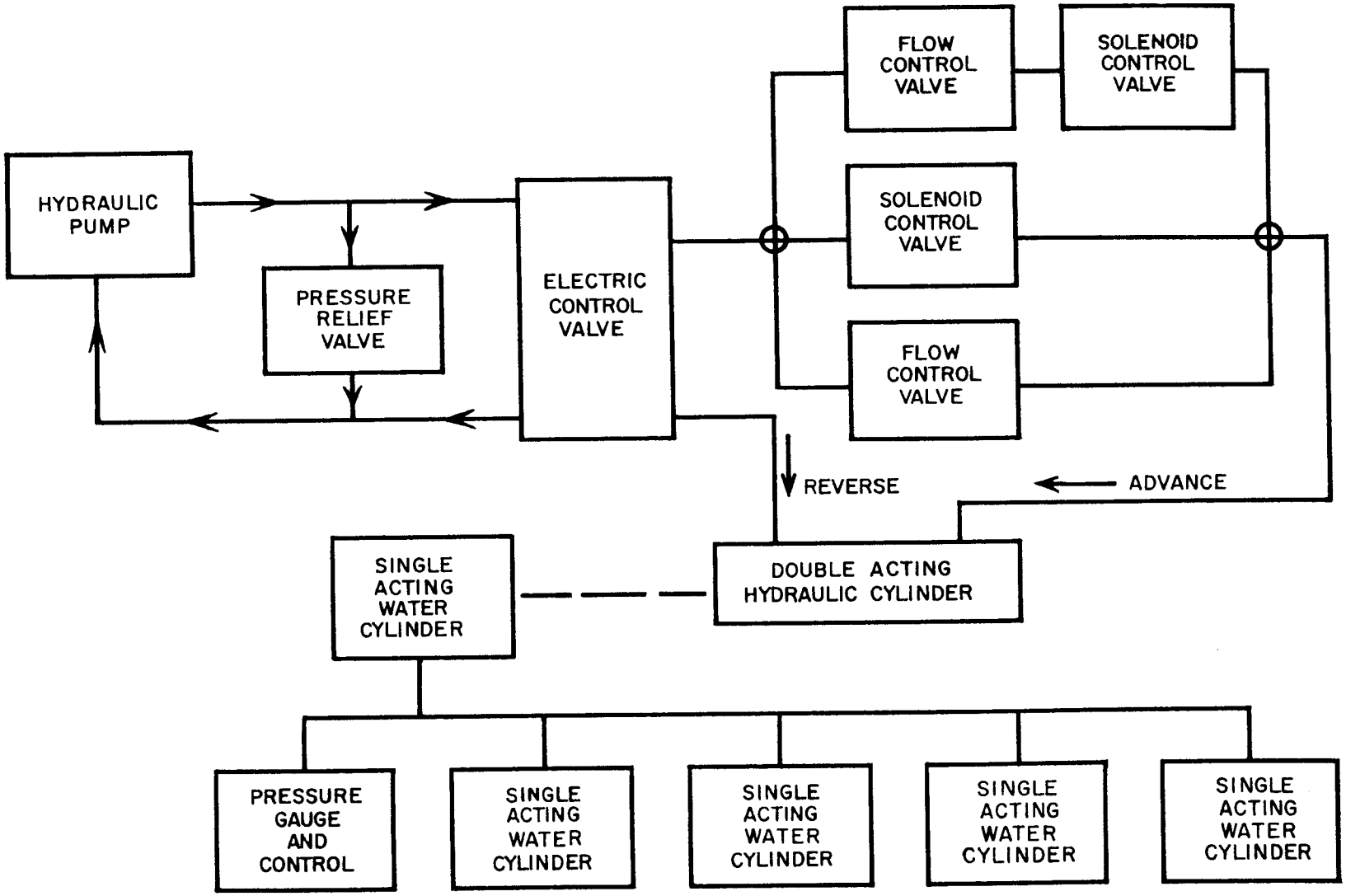

FIG. 12 - HYDRAULIC TUNING SYSTEM

98-13-A

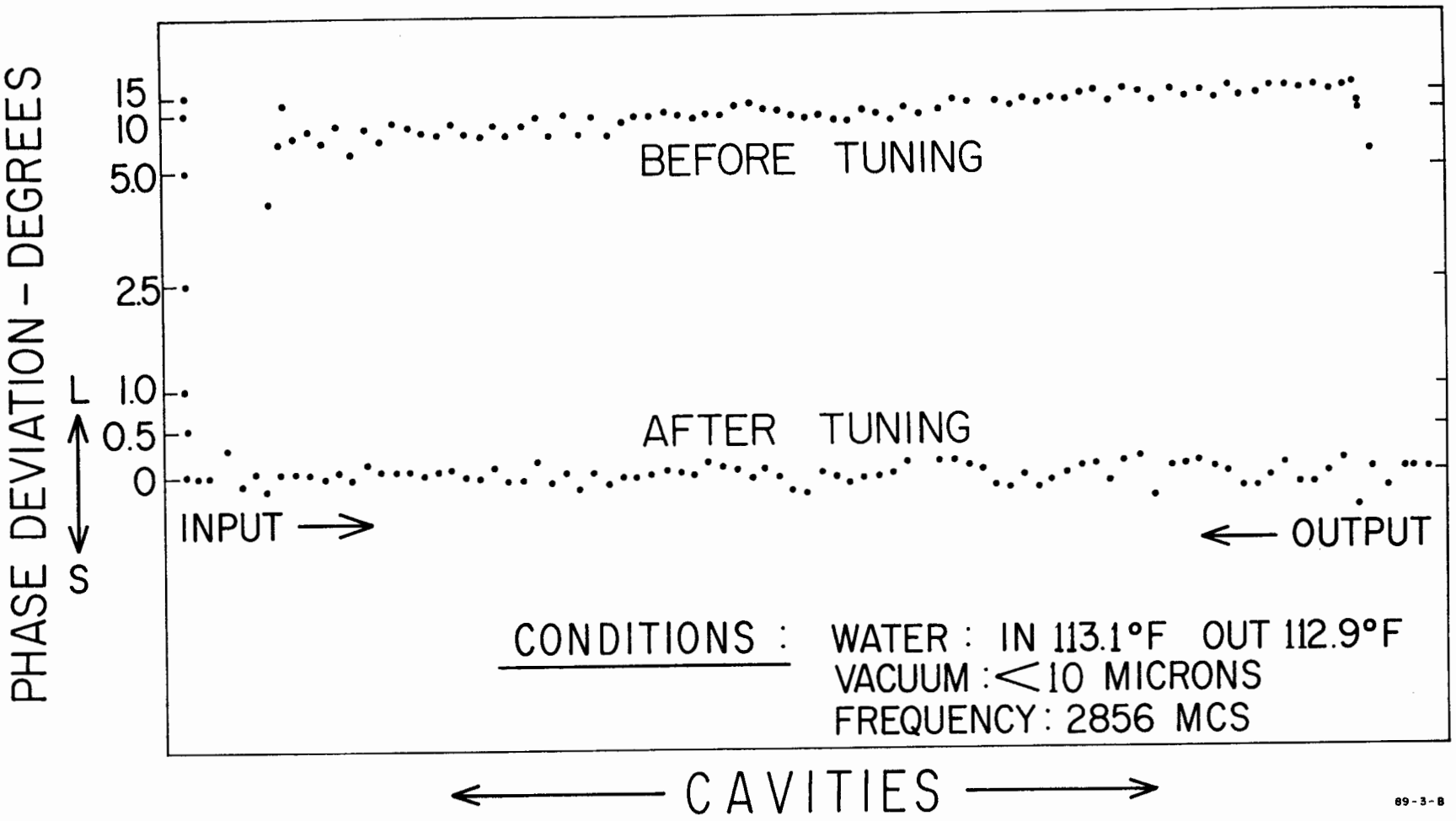

FIG. 13 - ACCELERATOR STRUCTURE TUNING PLOT

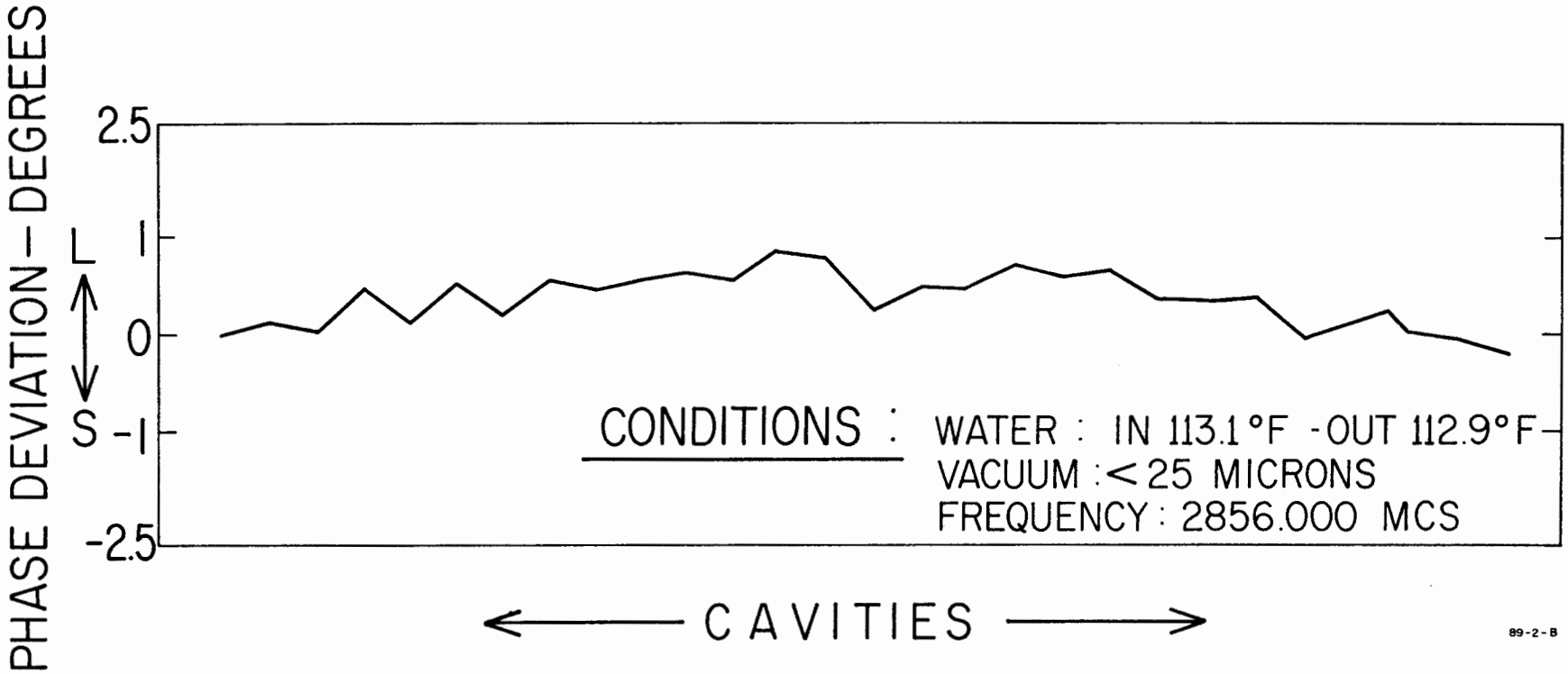

FIG. 14 - ACCELERATOR STRUCTURE PHASE PLOT

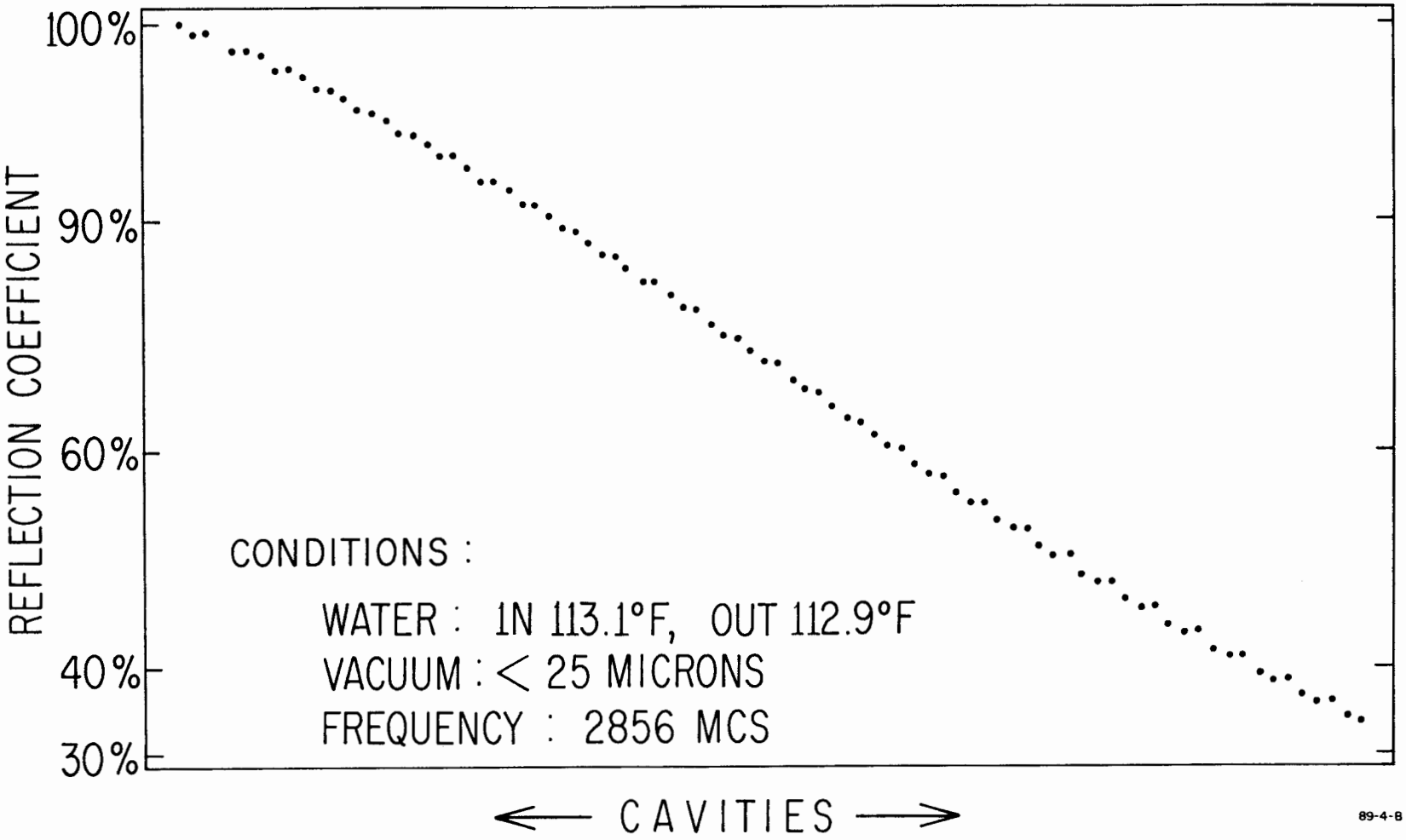

FIG. 15 - INPUT REFLECTION COEFFICIENT PLOT

A method to measure input and output port VSWR at the station, using an external moving short, and measuring the reflection coefficient, was established. This is possible using microwave vacuum windows at both ends of the structure under test and making the measurement at the operating frequency and under operating temperature and dielectric conditions. This reflection coefficient information is used to calculate total attenuation and make possible a comparison with the reflection coefficient information obtained above.

In addition, the following changes are in progress or contemplated:

Fabrication of an improved tool to facilitate tuning (indenting) of the coupler cavities with the accelerator structure mounted in the tuning station is under study. Previously, the first few cavities of the structure were tuned by hand, outside the machine. Experience and improved techniques have now made it possible to do this work in the station, but because of mechanical interference, it is not possible to tune the coupler cavity with the hydraulic indenting system.

The simultaneous measurement and recording of phase deviation and reflection coefficient at Station No. 2 (quality control) is being considered. This addition, which would save at least 30 minutes of quality-control time, should be accomplished during the quarter.

2. Accelerator Structure High-Power RF Testing

During the quarter a total of 29 ten-foot accelerator sections were processed through high-power rf test facilities to determine phase characteristics. These tests were performed using the system outlined in SLAC Reports 18 and 27.* The phase measuring equipment discussed in those reports, however, has been changed. An oscilloscope with a differential amplifier is now being used, replacing the gated pulse amplifier previously used. The slotted line is now set manually rather than automatically.

*"Two-mile accelerator project, Quarterly Status Report, 1 April to 30 June 1963," SLAC Report No. 18, Stanford Linear Accelerator Center, Stanford University, Stanford, California (August 1963), p. 14; and "Two-mile accelerator project, Quarterly Status Report, 1 October to 31 December 1963," SLAC Report No. 27, Stanford Linear Accelerator Center, Stanford University, Stanford, California (February 1964), p. 13.

A two-foot-long sensor well made of high-purity copper is brazed to each 10-foot section of disk-loaded waveguide. The well is 1/2-inch wide and 1/4-inch high; it forms a housing in which a 24-inch, stainless steel expansion bulb can be installed. The bulb will provide automatic control of temperature for each section. Initially these bulbs will be installed only on those sections of the accelerator that have full klystron power or that receive all the power from a single klystron. These sections include the first three of Sector 1, for example. During Stage II of accelerator operation, expansion bulbs, will be inserted in the sensor well of each of the sections.

In order to determine the optimum placement of these wells and the effects of ambient temperature on an accelerator section, special tests were run. The sections were operated both with and without insulation and the sensor was moved to several locations to find its optimum control position.

Figure 16 shows the power versus changes in inlet water temperature with the skin temperature of the section held constant. Two tests were run, one with insulation on the section and one without. As can be seen on Fig. 16, the curve is offset by insulating but the slope or change of temperature versus power is the same. Sections having the same slope will exhibit the same phase changes with changes in power or temperature.

Figure 17 shows the relationship of power versus inlet water temperature where the phase shift was kept at zero by adjusting the inlet water temperature for different power levels. Again, as in Fig. 16, the slopes of the two curves are the same with or without insulation. The conclusion drawn from these tests is that the performance of the accelerator sections will be satisfactory without insulation.

The phase shift through a ten-foot accelerator section when its skin temperature was controlled using the 24-inch mercury-filled sensor as a thermocouple is shown by the five graphs of Figs. 18 and 19. The tests were run to find the location for the sensor which gave the minimum phase change with the changes in input power. The tests, again, were run with and without insulation of the sections.

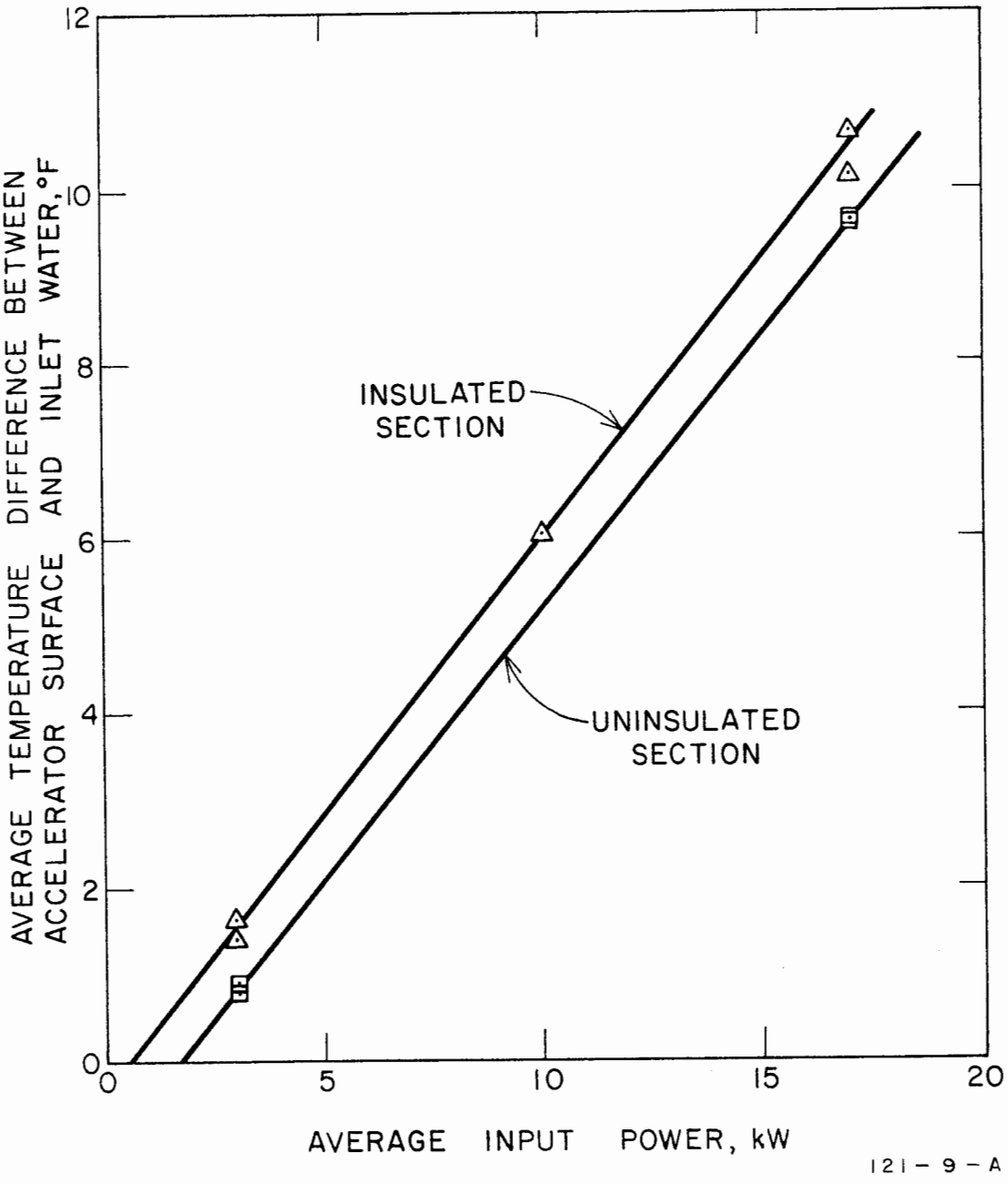

FIG. 16 – AVERAGE TEMPERATURE DIFFERENTIAL AT VARYING POWER LEVELS

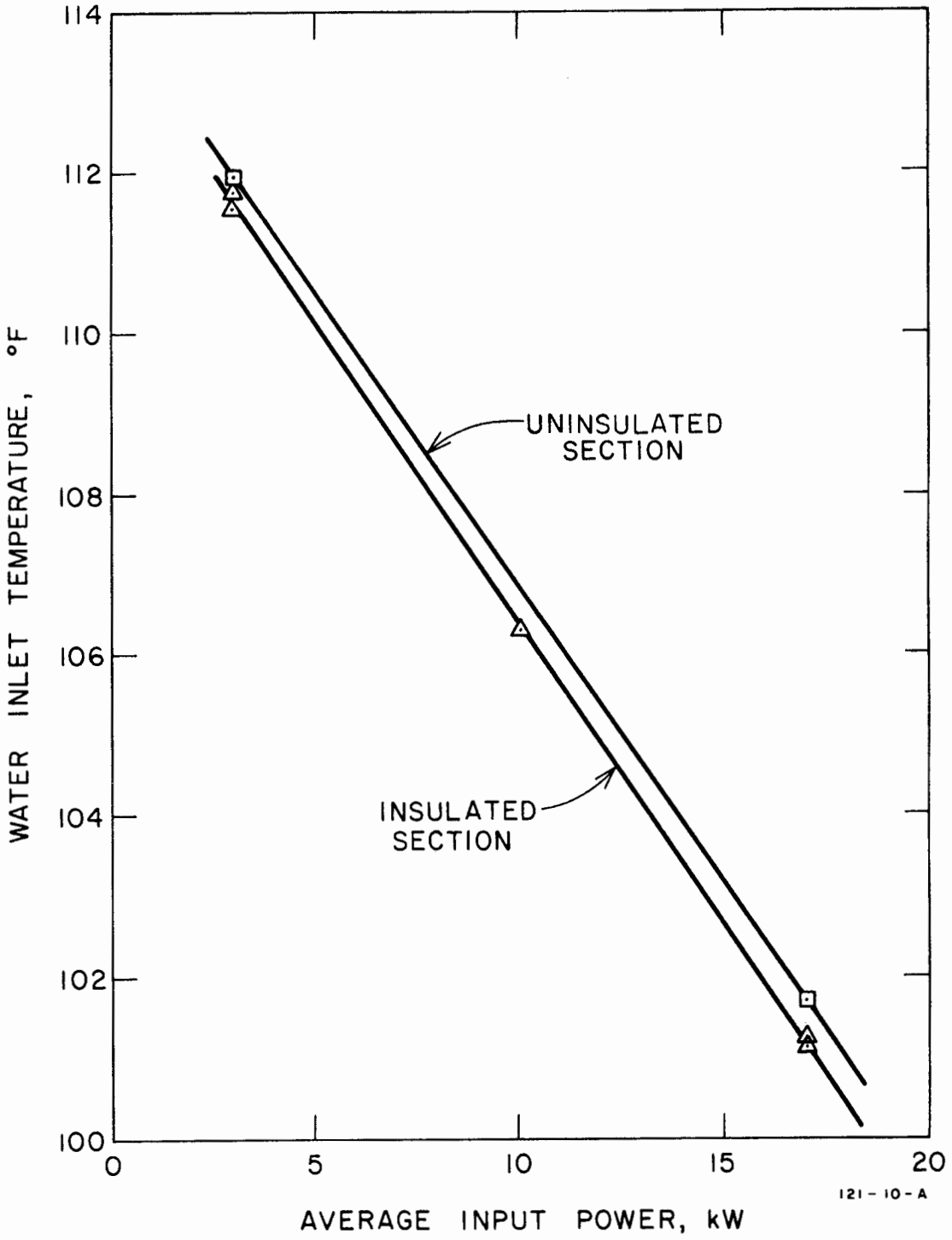

FIG. 17 - POWER vs INLET WATER TEMPERATURE CHANGE

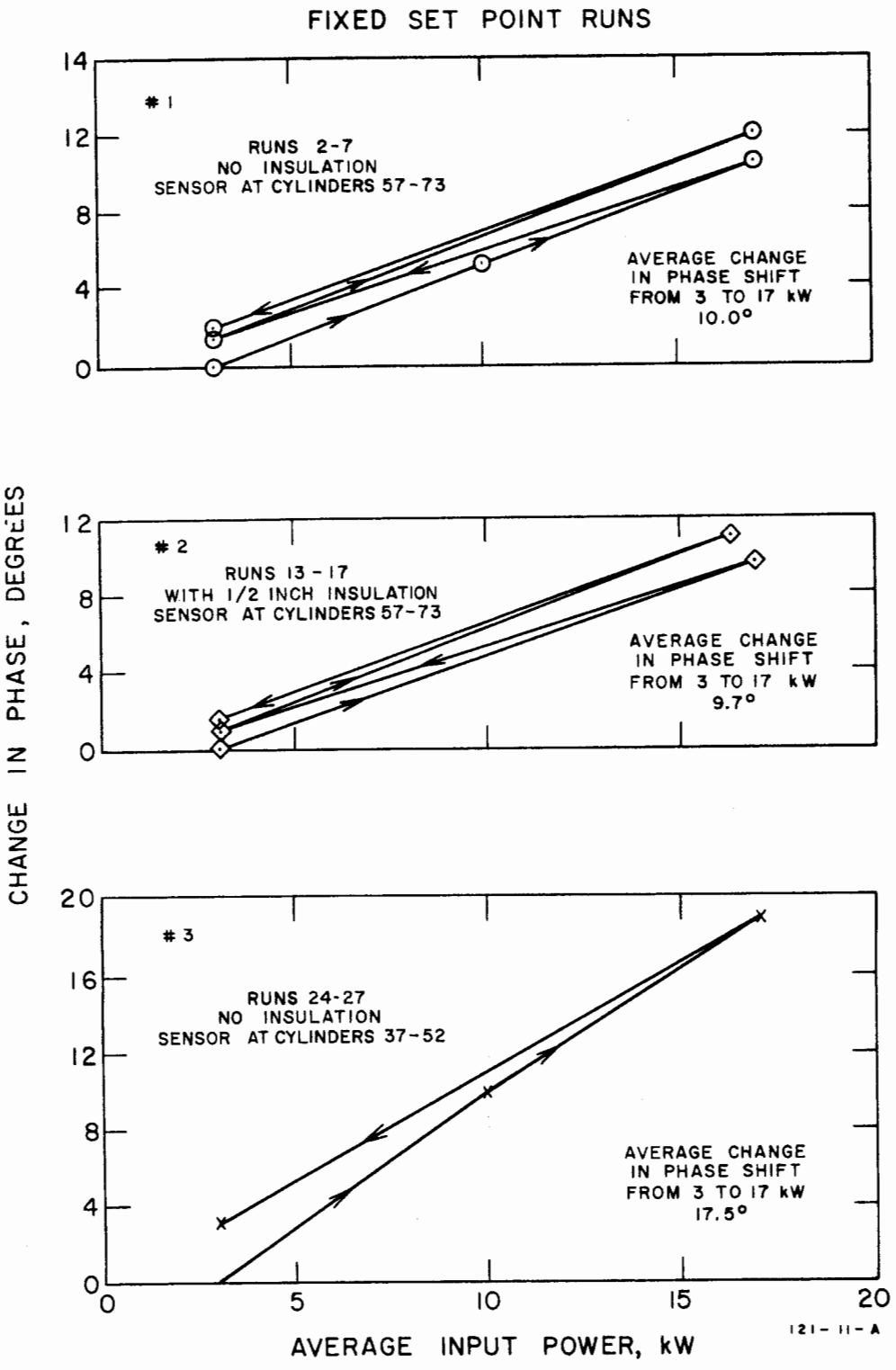

FIG. 18 - POWER vs CHANGE IN PHASE
(RUNS 2-7, 13-17 AND 24-27)

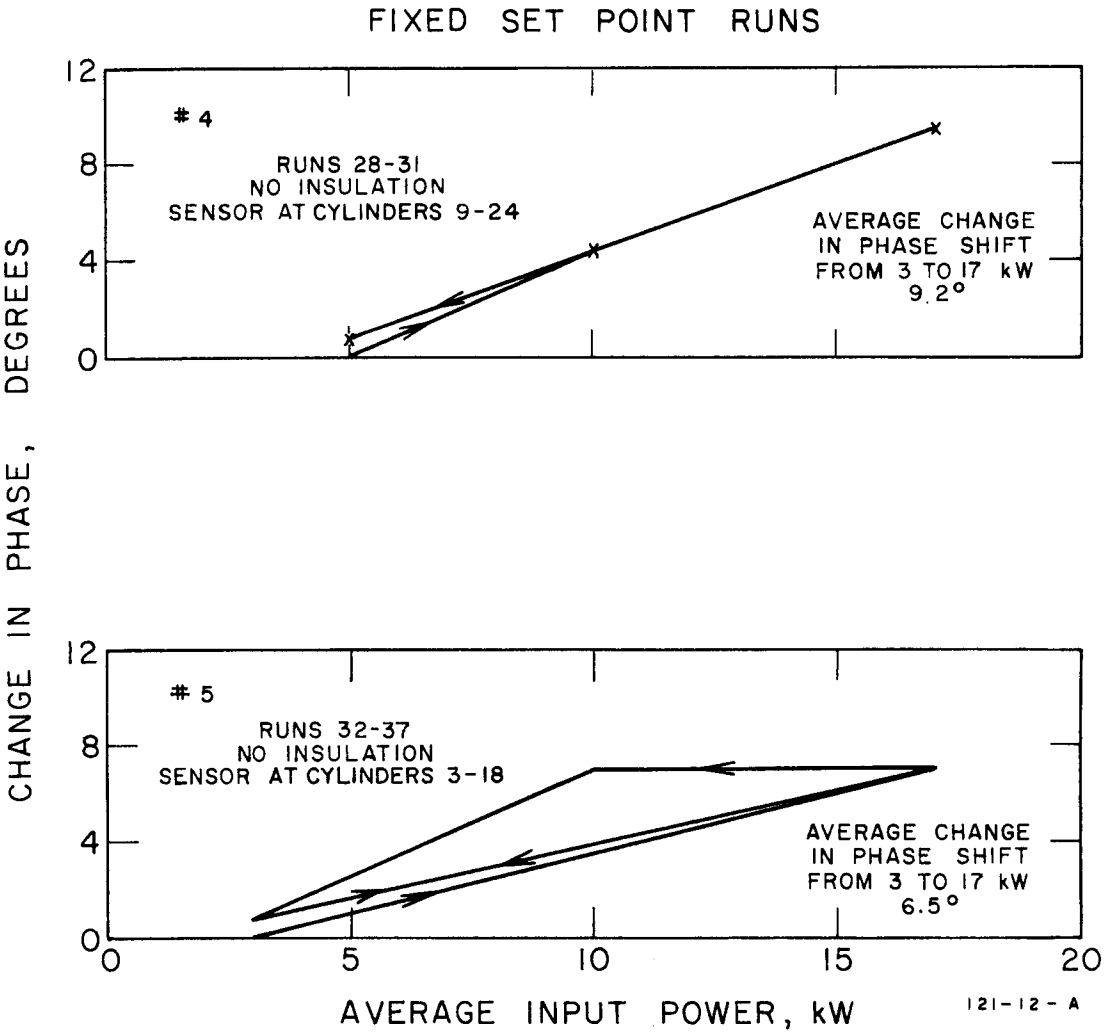

FIG. 19 - POWER vs CHANGE IN PHASE
(RUNS 28-31 AND 32-37)

By comparing these graphs, one finds that the least amount of phase shift occurred under the conditions indicated on graph number five, but the phase is unstable. This unstable condition was expected because of the proximity of the sensor to the coupler, which does not exhibit the same heat characteristics as the rest of the accelerator section under varying power conditions. The next best phase shift condition is shown on graph number four, where the sensor well was mounted at section cylinders 9 to 24. However, at this position, the sensor well interferes with a hairpin water tube retaining ring. Therefore, locating the sensor well between cylinders 57 and 73, as shown on graphs number one and two, was the remaining choice. It should be noted, however, that locating the sensor well at any position still resulted in an excessive phase shift ($\approx$ 10 degrees), and a better system for monitoring and controlling the inlet water temperature may be needed. Such a system might be achieved by programming the inlet water for specific settings of input rf power.

3. Measurements of Coupler Fields in the Accelerator Structure

The decision to proceed with the flip-flop was based, in part, on measurements of the phase shift across the coupler cavity. These measurements indicated temporal field variations which are capable of producing non-negligible beam deflections. Amplitude measurements also indicated the possibility of some residual amplitude asymmetry.

Measurements of the phase and amplitude of the axial components of the coupler fields are continuing. These measurements may be used to obtain more accurate values for beam deflection and to see whether further corrections for amplitude asymmetry should be made.

D. STRONGBACK STRUCTURES

The contract for manufacture and assembly of all components for the strongback structures was awarded during the reporting period. Ten days following the award, the decision was made on project flip-flop. With this arrangement of accelerator sections, six different configurations of strongback had to be provided.

To maintain the fabrication schedule, the manufacturer was directed to continue producing old style parts while gradually phasing in the new type. Flip-flop strongbacks require 50% of the old style and 50% of the new. It was decided that the manufacturer's quality run had to be all new parts, however. To simplify the phase-in of the new style parts, the simplest new end assemblies (the rigid end assemblies) were manufactured first.

At the end of the quarter it was estimated that the manufacturer would be producing production quantities of all strongback configuration by the end of August.

E. FORTY-FOOT SUPPORT GIRDERS

At the end of the quarter specifications had been prepared on all components associated with the 40-foot support girders. Requests for bids and actual awards had been made for all items and some had been received. Two support girder fabrications are due for delivery early in the next quarter. Contact with the subcontractors involved in the production of the 40-foot support girder and its associated components indicated that the subcontractors will be able to maintain the required schedule.

F. RECTANGULAR WAVEGUIDE PHASE MEASUREMENT

The phase table waveguide parts for testing and tuning crossbars and Sector 1 S-assemblies were completed during the period. The vacuum, water, and electrical systems associated with the table are near completion for the crossbars and Sector 1 S-assemblies. The magic-T test circuit for tuning the penetration waveguide* was found to work well.

The alternating orientation of the accelerator couplers (i.e., the flip-flop geometry) has required modification of the rectangular waveguide S-assemblies, which connect to the accelerator input couplers. This redesign has in turn led to several changes in phase and adjustment procedures.

---

*"Two-mile accelerator project, Quarterly Status Report, 1 January to 31 March 1964," SLAC Report No. 30, Stanford Linear Accelerator, Stanford University, Stanford, California (June 1964), p. 31.

The flip-flop geometry requires extra bends in the S-assembly. Space limitations have led to the design of the H-plane mitre bend shown in Fig. 20. This bend has a reflection coefficient below 0.010.

The electrical length of the mitre bends must be known in order to design the flip-flop S-assemblies for equal phase at the output flanges, as one S-assembly output arm contains two more mitre bends (Fig. 20) than does the other output arm. This electrical length has been measured for several mitre bends, and the variation in electrical length has been measured as the diagonal mitre dimension is varied. Normal phase adjustment can easily correct for variations in electrical length which result from expected machining tolerances.

The flip-flop S-assemblies are of a shape which is not easily connected to a phase table. Furthermore, their shape and size increases their vulnerability to accidental change in phase adjustment during installation. Therefore, it has been decided to perform coarse phase adjustments in the Fabrication Building, and to make the final adjustment of the rectangular waveguide components after their installation.

The klystron gallery cross-bars are measured and adjusted on the phase table, to approximate phase symmetry, and the penetration waveguides are measured and coarsely adjusted with the magic-T circuit. The S-assemblies are mounted on the 40-foot accelerator segment and are phase-adjusted coarsely by means of a phase method known as the modulated reflection system, which is described below. Then the 40-foot accelerator segment with the S-assemblies is installed in the accelerator housing, and the rest of the rectangular waveguide components are connected together. Prior to installation of the klystron, the VSWR is measured at the input flange of the cross-bar, and the modulated reflection system is planned for fine phase adjustment of the complete rectangular waveguide system.

Usual reflection measurements of phase are complicated by extraneous reflections in the waveguide. In the modulated reflection system* (Fig. 21) phase is measured by sending a CW reference signal into the system, amplitude-modulating the reflection coefficient at one output port, and

---

*Swarup and K. S. Yang, "Phase Adjustment of Large Antennas," IRE Transactions on Antennas and Propagation (January 1961).

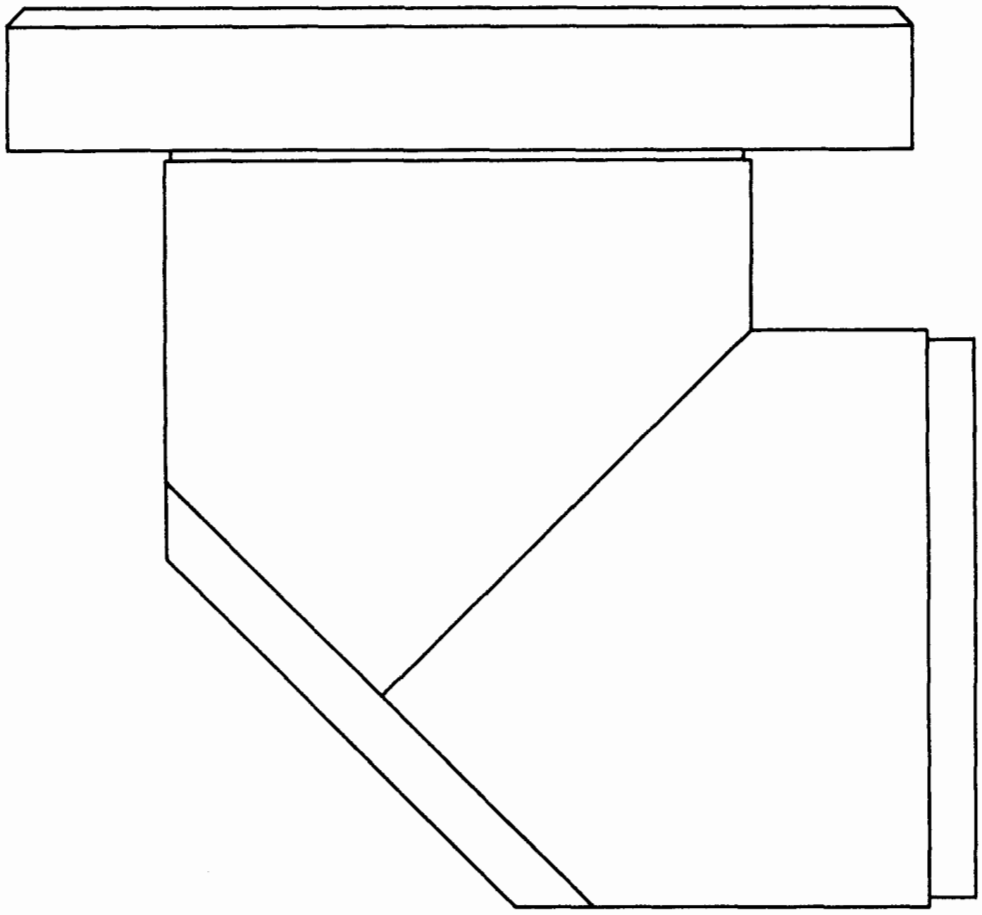

FIG. 20 - H - PLANE MITER BEND 127-17-A

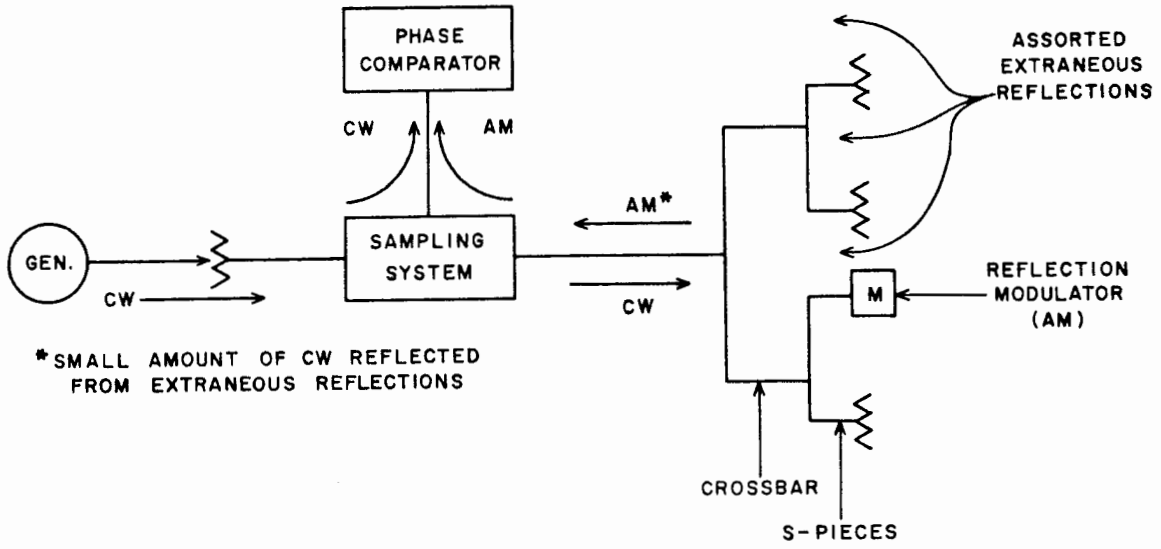

FIG. 21- MODULATED REFLECTION CIRCUIT

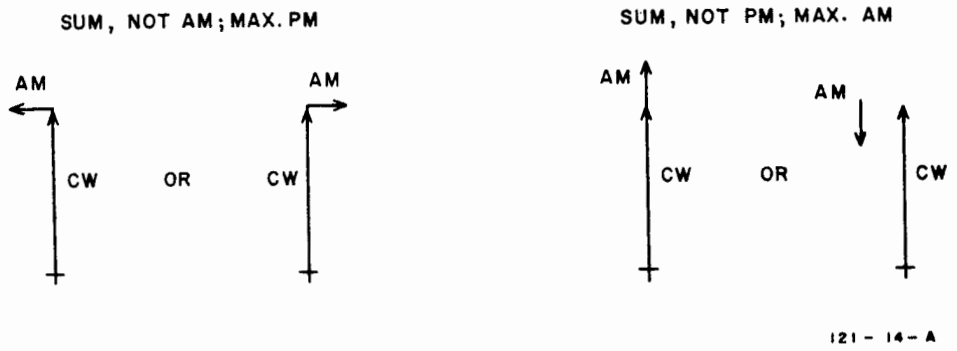

FIG. 22 - ADDITION OF AMPLITUDE - MODULATION
REFLECTION AND THE CW REFERENCE SIGNAL

phase-comparing that AM reflected signal with the CW incident signal. The modulation permits the desired signal, and hence the electrical length of the waveguide path being measured, to be distinguished from the extraneous reflections.

The phases of the CW and AM signals are compared by adding a large sample of CW signal and a weak sample of AM signal, and then amplitude-detecting the sum. A null is obtained on the indicator when the weak, modulated reflected wave is nearly in quadrature with the reference wave, and a maximum is obtained when the two are in phase (Fig. 22). The amplitude modulation is detected by applying the signal to a crystal detector.

The waveguide deforming tools were built, and initial phase adjustment trials were successful. The tests were performed to make sure that the deforming tools worked both mechanically and electrically and would not impart excessive reflections to the waveguide.

The copper waveguide narrow walls can be squeezed to produce 7° decrease in electrical length per foot of guide, and the broad walls can be squeezed to produce 15° increase in electrical length per foot of guide, without causing serious reflection.

Either pair of waveguide walls may be squeezed within the elastic limit to produce a temporary $1/2^{\circ}$ change in electrical length. This procedure is used to verify that the proper walls are being squeezed, before the waveguide is given permanent deformation.

New squeezing tools are being designed to permit easier operation, including remote control and monitoring of the deforming operations.

Calculations were made to determine the effect of residual gases in the rectangular waveguide components during phase measurement. Gases affect the propagation of a wave because of two effects: First, the dielectric constant of gases (nitrogen, oxygen, water vapor, etc.) is different from that of free space, and second, the waveguide walls are deformed by the difference in pressures inside and outside the guide. A pressure of 10 mm of mercury (inside the waveguides) was found to be tolerable during phase adjustment. This eases the vacuum requirements on the phase table and other facilities.

G. RECTANGULAR WAVEGUIDE HIGH POWER TESTS

Preliminary tests have been run on the resonant ring and an average power of 37.3 kW and a peak power of 24 MW were reached with good stability. Power as high as 60 kW was obtained, but the radiation level was too high. The ring is now being shielded so that power in excess of 60 MW can be used continuously. The rf gain of the ring was measured and was found to be 13.65 dB. Low conductivity water is used for cooling the waveguide and for keeping the ring stable.

A new stainless steel vacuum station that uses a 400 liter-per-second ion pump was installed for processing rf loads and coupler assemblies. The system, as installed, is holding vacuum to 10^{-7} torr. At present, the system is being wrapped with heat tapes and insulation material preparatory to baking the stainless steel to 500°C, and the area around the vacuum valves to 200°C.

It is hoped that an ultimate vacuum of 8 or 9 times 10^{-9} torr can be obtained at the pump and 2 or 3 times 10^{-8} torr at the pumpout. Judging from prior tests on waveguide components, using the old "purple coffin" test stands Nos. 1 and 2, it is expected that waveguide components can be processed in the 10^{-6} torr range and that high rf power can be held in the 10^{-7} range after processing.

A high-power calorimeter system has been constructed, which uses a new water load designed by the Klystron Department and incorporates fully immersed precision bulb thermometers and a turbine water flow gauge with an accuracy of 1/4 percent. This system will be used to check the coupling ratio of the model A directional couplers.

H. BORESCOPE INSPECTION OF RECTANGULAR WAVEGUIDE BRAZES

A borescope was purchased during the period to provide for the examination of brazed butt joints in straight sections of waveguide. This type of examination is necessary to determine if alloy is building up in or not filling up the inside of butt joints at the time of brazing.

I. MODEL A DIRECTIONAL COUPLER

The coupling coefficient of the model A directional coupler has been decreased to 52 dB from 54 dB by enlarging the diameter of the coupling

hole on the waveguide piece to 0.390 inch. The hole diameter was previously 0.350 inch.

J. MODEL B DIRECTIONAL COUPLER

The design of the model B directional coupler (Fig. 23) was finalized during the period. All detail drawings were completed and specifications for parts to be made on subcontract were sent out for bid.

A series of tests were performed to determine the optimum design for the phase monitoring cable and its coaxial adaptor on the model B directional coupler. The cable's function is to sample power, to monitor phase at each 40-foot section of the accelerator, and to provide this information to the klystron gallery.

A primary requisite in the design of the cable and its adaptor was that it provides the necessary information and, at the same time, present minimum interference in the accelerator itself. Therefore, the initial consideration was to determine the penetration depth of the probe end of the cable into the waveguide adaptor that would result in the lowest VSWR. Tests were performed using varying lengths of cable, several different test setups, and several different waveguide adaptor configurations.

A 33.5-inch cable was decided upon, with a Prodelin 79/875 connector installed on the end opposite the probe. A 0.8-inch penetration depth into the adaptor was optimum for the probe. It was recommended that a provision be made for minor tuning adjustments in the form of a tuning plug in the back plate of the waveguide adaptor (Fig. 24).

K. RF LOADS

Several rf loads have developed small leaks through the welded seams of the water jacket. Examination of the seams showed that there were some defects in the welds as well as corrosion in some of the type 410 stainless steel parts. The type 410 stainless steel has now been replaced by type 304 stainless steel. A cross-sectional view of an rf load is shown in Fig. 25.

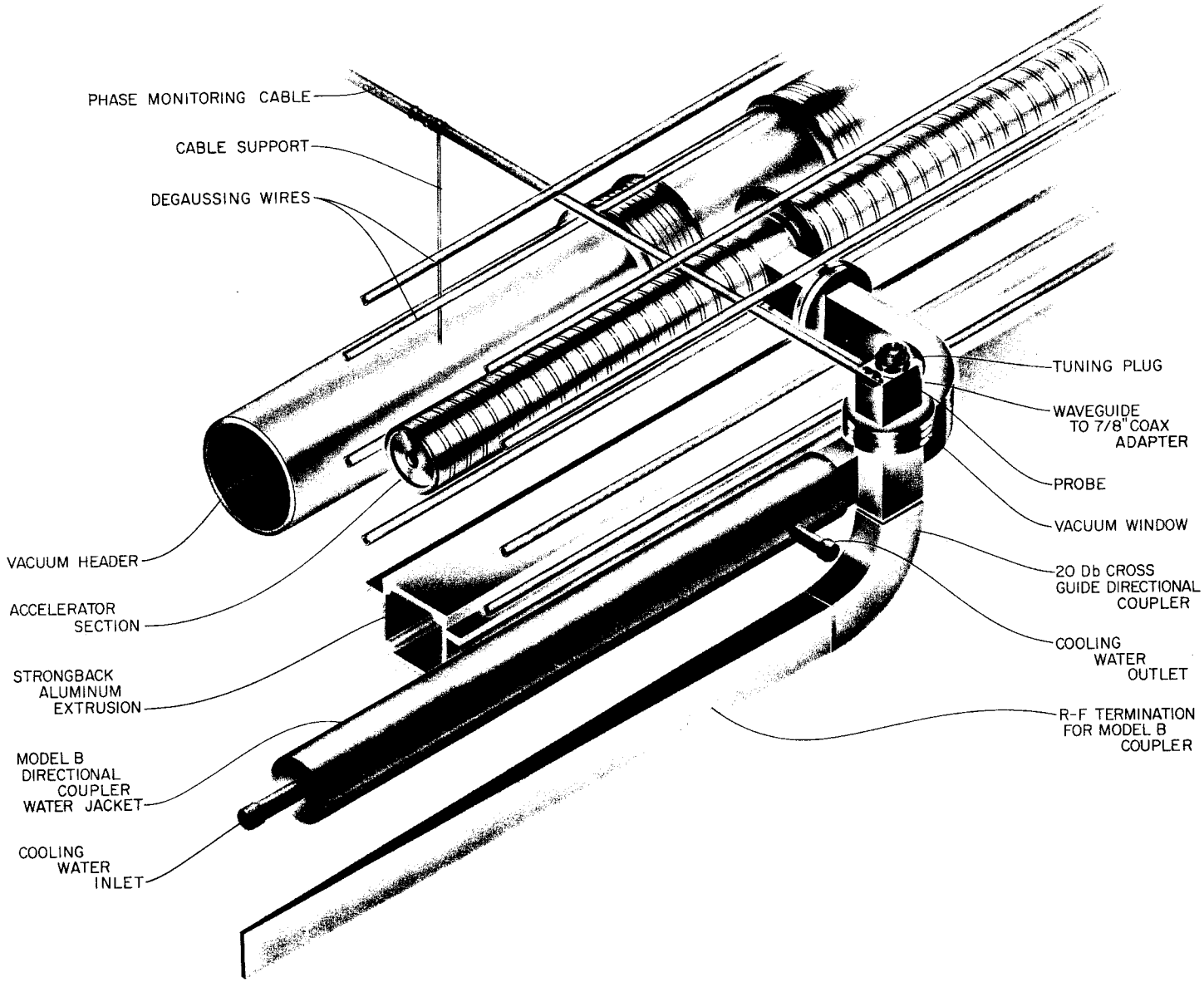

FIGURE 23 - MODEL B DIRECTIONAL COUPLER

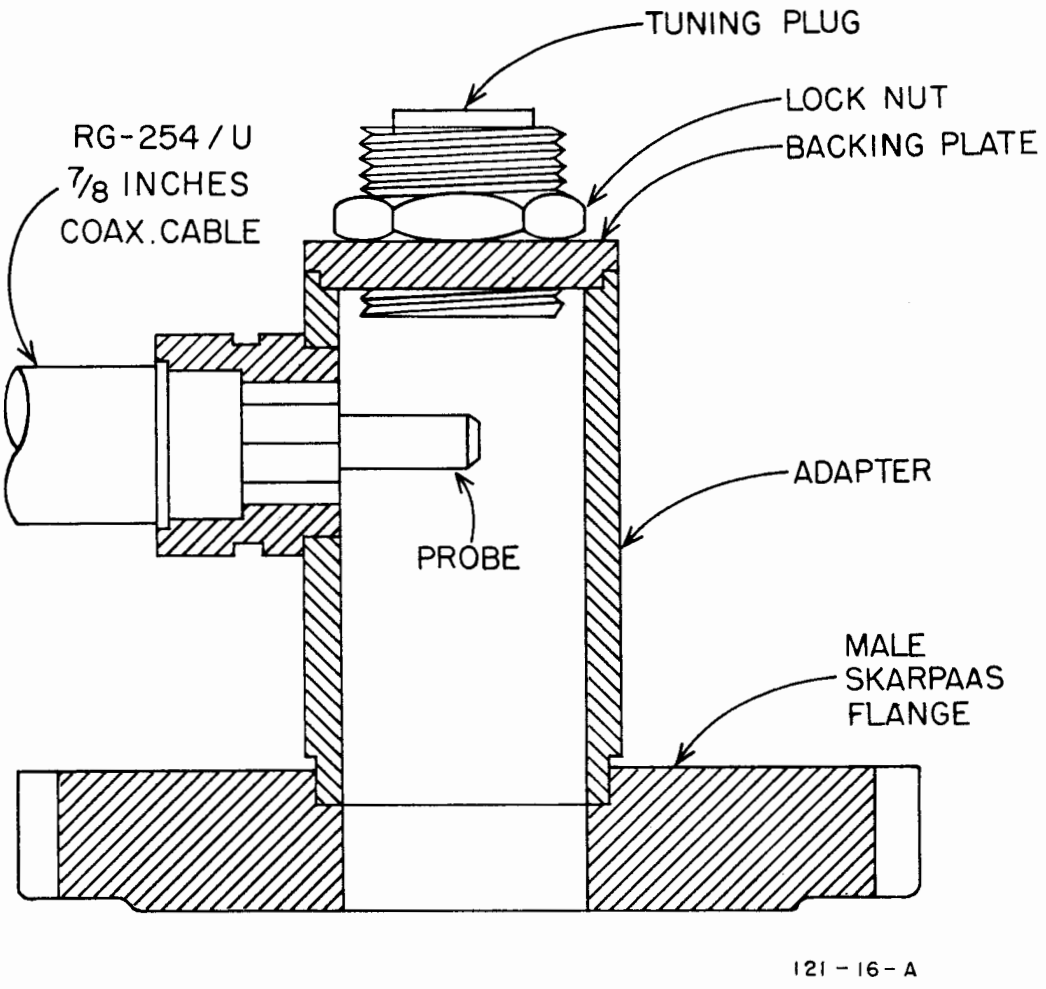

FIG. 24- WAVEGUIDE TO 7/8 INCH COAXIAL ADAPTER

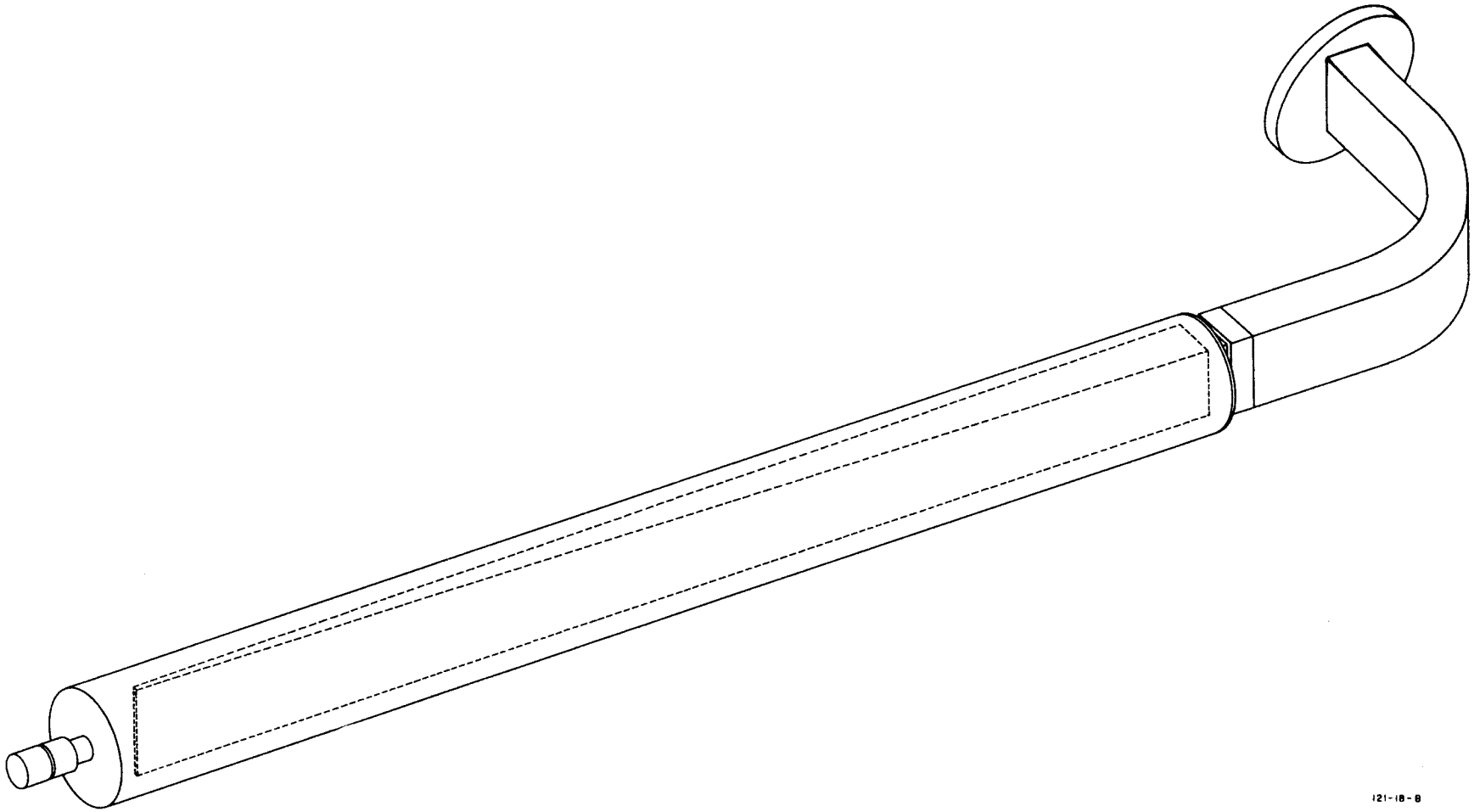

121-18-8

FIG. 25 - RF LOAD, CROSS-SECTIONAL VIEW

L. RF WAVEGUIDE VACUUM VALVES

1. Summary

The principal effort during this quarter has been toward building eight "pre-production" valves, which are being made according to the production prints. These units satisfy two important needs: (1) They will provide the necessary test units for verification of the production drawings and assembly techniques. (2) They will satisfy immediate requirements for operational valves for rf life tests, seal tests, etc., and can be used as well for meeting schedules if completed production parts are not available.

2. Production Valves

By the end of the quarter, all production valve items were out for bid, with approximately 85% awarded. Several vendors have submitted qualification parts which are presently being evaluated. Assembly of the first production valves should begin in September.

A cross section of the complete valve assembly is shown in Fig. 26. The major modifications over the model C valve are in the plunger assembly, and in particular the spring and the addition of ball bearings.

3. Pre-Production Valves

At the end of the quarter, four of the eight units had been completed to the extent of having been brazed. These units should be completely assembled early next quarter and will then undergo extensive tests. In future reports, these units will be designated as the pre-production valves whose serial numbers are PP-1 through PP-8.

4. Actuator Design

A completed unit of the "hand-crank" actuator mentioned in the previous quarterly report* is awaiting tests with the pre-production valves. Figure 27 shows the mechanism in cross section.

5. Model C Valves

Two model C valve units are in use on the high power test stands. Both units are cycled through rf power levels from 0 to about 15 kW

*SLAC Report No. 30, op.cit.

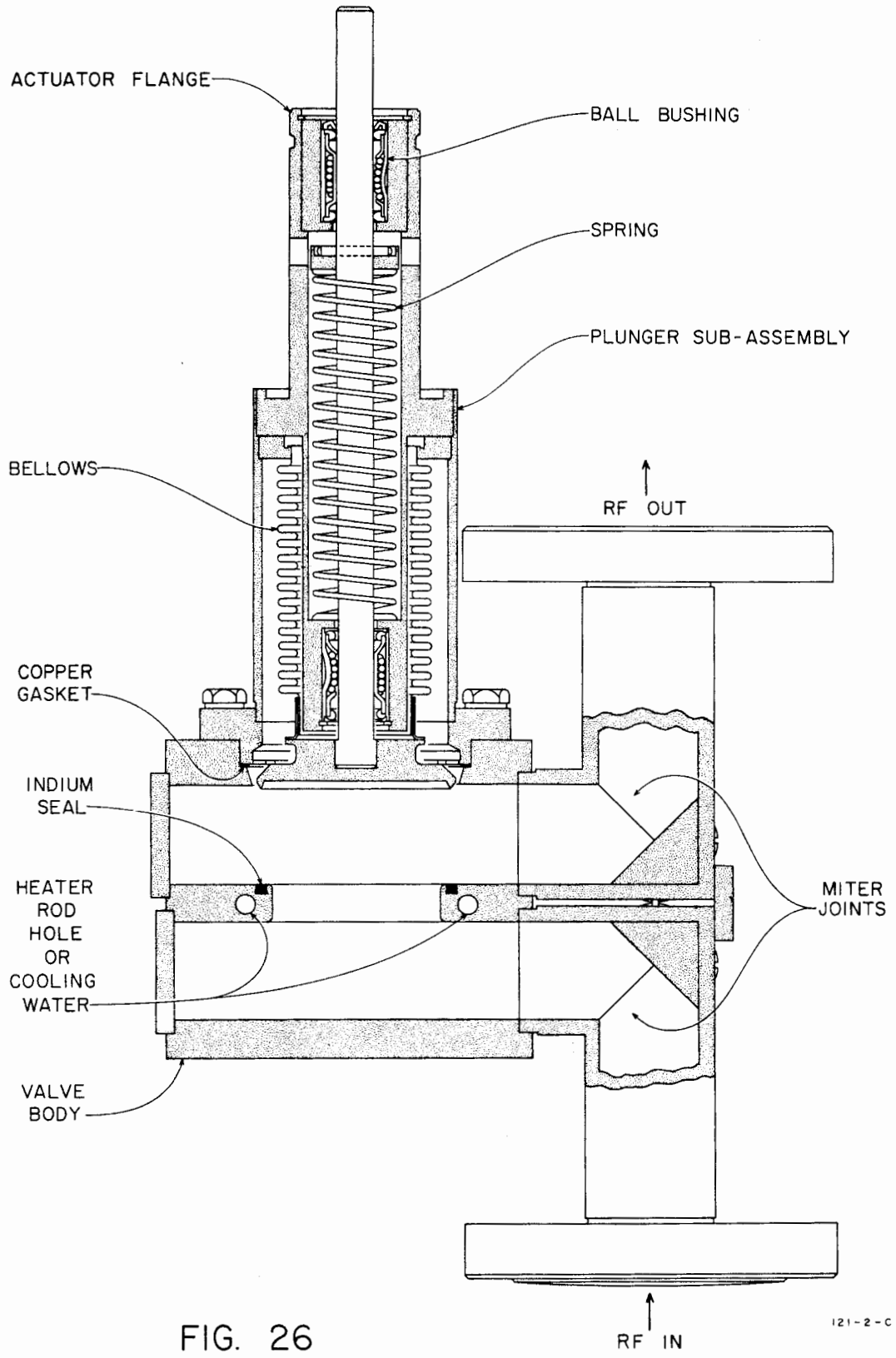

FIG. 26
WAVEGUIDE VALVE ASSEMBLY
CROSS-SECTIONAL VIEW

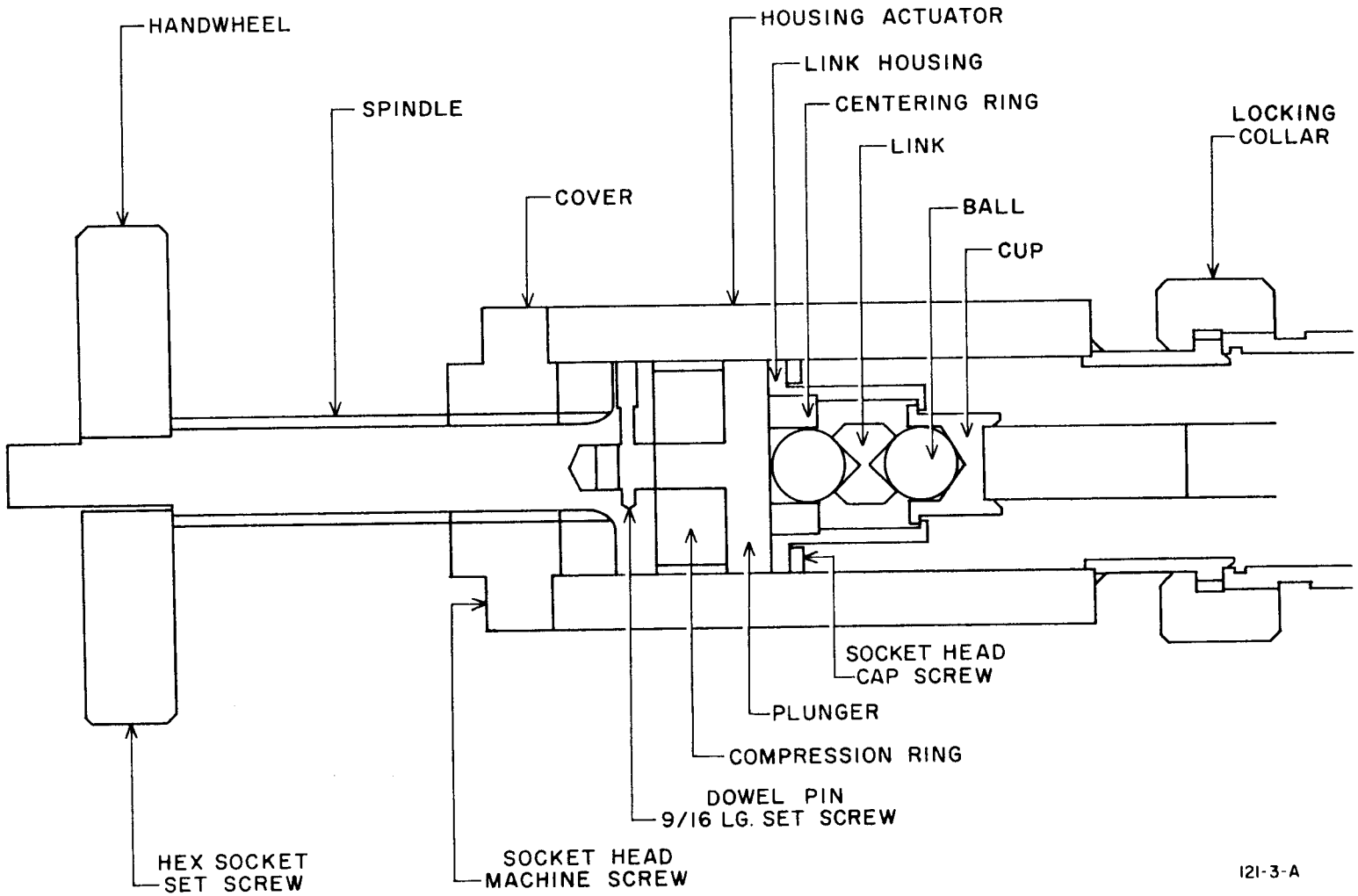

FIG. 27- WAVEGUIDE ACTUATOR ASSEMBLY CROSS - SECTIONAL VIEW

average power and approximately 15 MW peak power, which is normal practice in the processing of accelerator sections and other waveguide components. To date, valve C-2 has had 49 satisfactory closings without remelt, while valve C-6 has had 27.

A model C valve was installed on the klystron support mock-up late in the quarter.

6. Indium Tests

Several tests were made on the indium processing using the new facilities at the site. The first tests resulted in satisfactory indium-to-stainless steel wetting, but in all cases a yellowish-green oxide appeared on the indium surface upon cooling. The wetting occurred at relatively high temperatures, about 900°C.

After the addition of a dryer in the hydrogen lines and a new furnace can (reducing the amount of contaminants) the wetting occurred at temperatures of 750°C to 850°C and no oxide appeared at cooling. It is suspected that the dryer hydrogen (lower dew point) was the primary contributing factor in both results; however, this is not completely understood because other parameters, such as rate of cooling, part temperature, cleanliness of stainless steel and of indium, furnace gradients, etc., all play a vital role in the end result. Satisfactory wetting between indium and stainless steel is now achieved routinely.

M. DRIFT SECTION

The standard drift section entered the final design phase during this period. Definitive plans for the beam position monitor, the beam intensity monitor, and the sector phase cavity were received and final fabrication drawings were made.

The tentative decision to make the drift section girder removable was finalized. In addition, a beam profile monitor container was added to the drift section. This unit contains space for a profile monitor and will also serve as an access to the beam line.

The configuration for supporting the triplets was changed. The use of a double structure (quadrupoles supported above, other equipment below) was modified to a single support structure below. The same adjustment system will then be used for the magnet support.

The complete layout is established and all items are being detailed.

VIII. KLYSTRON STUDIES

A. SUMMARY

During the quarter, RCA delivered three klystrons, one of which is not fully tested yet. One tube was received from Sperry but was found to have gone down to air during shipment. Subcontracts have been negotiated and are in effect with both Eimac and Litton Industries for the delivery of six tubes from each company.

The Stanford klystron development has progressed, and several tubes have been operated in permanent magnet at levels meeting our specifications. One Stanford klystron used by other groups failed during the quarter after having been operated without filament power.

One RCA klystron on life test failed during the quarter after approximately 814 hours of operation. The second tube is still running after 1742 hours of operation, mostly at 250 kV and 360 pps.

A number of window failures during tube processing has required pretesting of coated windows. It was determined that the coating equipment was not performing satisfactorily, and additional work on coating continues, supplemented by the initiation of material and secondary emission studies.

The operating mock-up of the klystron gallery has been activated in the Test Laboratory and is proving a valuable tool in sub-system analysis.

The sub-booster klystrons continue to show some shelf life problems; on the other hand, three of these tubes have between 1700 and 2000 plate hours of operation, and one has 5629 plate hours of operation.

B. SUBCONTRACTS

Of the three klystrons received from RCA, two have been fully tested and meet the end-of-life specifications. Technical difficulties have been experienced by RCA in two main areas: windows and permanent magnets. The window problem has resulted in the failure of tubes built during late April and early May. Investigations indicated that the modulus of elasticity of the window material supplied to RCA had deteriorated considerably. As a result, RCA entered into a double program to rectify

their difficulties: (1) Some specially built window samples were procured and a more stringent quality control was instituted and (2) The mechanical design was reviewed, and it was found possible to decrease the stresses produced on the window by the compression band which is used to make the vacuum seal. As a result of these changes, a tube was shipped near the end of June, and regular shipments should be resumed in July.

Some RCA shipments were also delayed by the lack of permanent magnets. One of their suppliers suffered an accident in the magnetizing generator and was unable to deliver any magnets for approximately six weeks. The second supplier was apparently having production difficulties in meeting the field requirement specifications set by RCA.

RCA also attempted during this period to transfer the tubes from engineering to production, and some unexpected difficulties (such as body oscillations, low emission cathode, etc.) occurred. This transition also contributed to the low yield of tube deliveries from RCA.

During the quarter, a Sperry tube was received but could not be tested because of extreme gassiness in the tube. Engineering studies of oscillation problems have apparently resulted in stable tubes from the standpoints of both gun and body oscillations. A change in the collector dimensions has also alleviated some of the oscillation problems, and the majority of the tubes tested by Sperry which reach the full beam voltage show adequate power and stability to meet the end-of-life specifications. The cathode activity problems have not yet been fully resolved, and a large percentage of tubes showed poor vacuum conditions which in many cases prevented testing to full voltage. The exact reason for the poor vacuum has not been fully determined yet.

Subcontracts were signed with both Eimac and Litton Industries for the procurement of six klystrons from each company. Both contracts are of the incentive type and each company is working toward efficiency improvements over the normal values for klystrons.

C. FACILITIES

In general, all facilities have been operating satisfactorily during the period. Two minor exceptions are the air conditioning and water

systems in the klystron assembly area, which are not fully reliable. The water system has been improved during the quarter by the following measures: installation of filtering in the incoming domestic water line, replacement of the distilled water storage tank to insure good quality water in the chemical cleaning room, and addition of a carbon filter for the domestic water to the chemical cleaning room.

In the test area, the modulator and associated equipment are performing satisfactorily with a down-time not exceeding 20%.

The facilities for X-raying tubes and other equipment have been completed and are now in full operation. It appears desirable to add a low energy (less than 100 kV) X-ray machine to conduct window studies in this same area.

The mock-up test stand, including one klystron support frame with klystron, modulator, fiat rack, vacuum system, and the sub-booster drive line, was completed and put into operation. The klystron has been installed and removed several times without difficulty, and the cryogenic vacuum roughing system has worked properly. The system has operated with rf to approximately 6 MW into a water load simulating the accelerator. At the present time the difficulties that have been encountered are largely owing to circuit wiring errors and some equipment malfunction. Some of the equipment in the fiat rack is not of the final design so that a full checkout of the system cannot be made. As soon as the necessary parts are available, standard accelerator waveguide will be installed and the system will be operated into a section of accelerator. This will allow testing of the effects of an accelerator on the operation of klystrons.

The apparatus for moving the klystron (modified fork lift, Hovair platform, and klystron support yoke) have all been used and operated successfully with some minor modifications. The trucks to be used for transporting the klystrons to the gallery have not yet been obtained, so this facet of installation has not been tested.

D. KLYSTRON FABRICATION AND DEVELOPMENT

Twenty tubes and one diode were built during this quarter, including several tubes incorporating the new gun design. In addition, ten water loads were built to supply test stand requirements.

The yield of the tubes built and tested during this period has not been as high as desired. Some cathode emission problems were experienced, resulting in some temperature-limited tubes that had to be reworked. Some tubes did not have as good a vacuum as expected, preventing operation at full power; in addition, window failure caused approximately 20% loss of the tubes tested.

The modifications introduced during the previous quarter to eliminate gun oscillations were apparently not fully successful because oscillations reappeared in some tubes, although not to the extent previously noticed. However, the tubes which incorporate the new Merdinian gun design have not shown oscillations. Because these tubes also exhibit good over-all performance in output, gain, and efficiency, we believe that the oscillation problem can be considered resolved.

Four tubes were built and tested using the Merdinian gun design. In electromagnet they all showed substantially the same performance with a gun perveance of 1.75 to 1.8, a peak power output of 19 to 20 MW at 250 kV, and a maximum efficiency of between 36% and 38% at approximately 225 kV. The interception is extremely low and the magnetic fields do not appear to be critical. The power output can be increased slightly (up to 1 MW) by using a phase shifter in the output waveguide, which indicates that the output cavity coupling is not fully optimized.

Two of these tubes have been tested in a permanent magnet which has a substantially uniform field of approximately 1000 gauss over the beam interaction region. The curves shown in Figure 28 indicate the performance of the two tubes tested in this magnet. Window failure during electromagnet tests prevented testing the other two tubes of this design in permanent magnets. A total of nine permanent magnets have been ordered during the quarter so that Stanford tubes could be installed in the klystron gallery should this be necessary at the time of Sectors 1 and 2 tests.

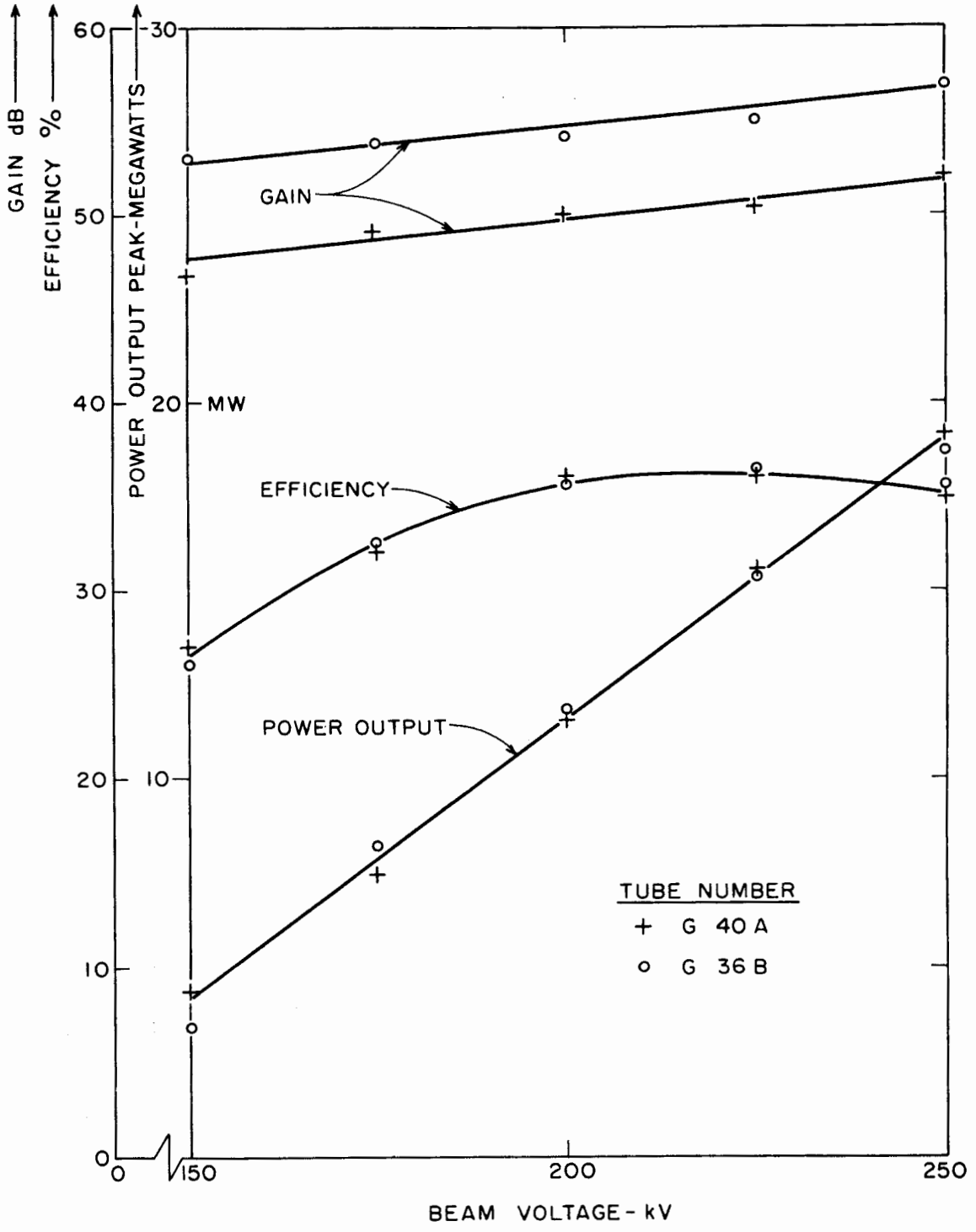

FIG. 28 - STANFORD TUBE PERFORMANCE IN PERMANENT MAGNET

128-1-A

E. STANFORD KLYSTRON USAGE

Two new klystrons have been installed for use by other SLAC groups, including one to replace a tube which failed after eight hours of operation. The failure was caused by operation without cathode heater power. The other tubes appear to be operating satisfactorily, although the total operating time of the tubes installed is not sufficiently high to draw conclusions as to probable klystron life. A diode used for prototype modulator evaluation has operated approximately 4700 hours to date.

F. ACCEPTANCE AND LIFE TESTS

One of the two RCA tubes which began life testing previously failed after 814 hours. The second one, which is operating in the prototype pulse transformer tank, has logged 1742 hours, and appears to be still within specifications; a small instability lasting less than one minute after turn-on is the only indication of any deterioration in tube performance.

Provisions have been made to operate as many as four vendor-procured tubes on life test when these tubes become available, and a second test stand will be converted to acceptance tests to enable us to deal with a larger number of tubes.

G. INSTALLATION ON THE MACHINE

All of the equipment needed for installation and replacement of klystrons on the machine has been ordered, but only the fork lift was received during the quarter. The installation of the mock-up test stand was carried out by using borrowed equipment, and has proved satisfactory. Modifications to the electric trucks and trailers will be carried out upon receipt so that they can accommodate the equipment necessary for ease of installation and replacement of klystrons.

The initial twenty klystron support yokes have been received, and the first one has been installed and tested in the mock-up test stand. As a result of these tests, it has been necessary to design additional stiffening in the yoke and to provide a direct tie from the pulse transformer tank to the column of the klystron support beam. These modifications have been tested, and it is planned to incorporate them as soon as possible in the gallery.

H. HIGH POWER KLYSTRON WINDOWS

Because of some difficulties experienced with coated windows, a pre-testing program has been put in effect. In addition, work on various aspects of coatings continues, supplemented by the start of secondary emission and material studies. Tests on the effect of tilt and testing of hot-pressed boron nitride and grooved alumina windows were also performed. The window life test unit continues to operate, with no failure to date.

1. Window Coatings

(a) Baked Windows

Three coated windows were baked in a pre-fired OFHC copper housing along with a klystron. One of these performed somewhat better than the windows baked in the molybdenum housing,* it ran to 84 MW before any breakdown was observed. After running for a few minutes at 90 MW, however, the temperature began to rise quickly, and the window would probably have failed had it been allowed to continue at this level. Operation was quite stable at 80 MW, where the steady-state temperature was 195°C. Another window ran at a quite cool temperature until intermittent breakdown was allowed to occur at 72 MW, 66 kW; there the temperature began to rise very quickly, and failure from cracking occurred at approximately 350°C. The third window was run only to 10 MW, at which time it was removed in order to run other tests. It will be retested next quarter.

From these tests it appears that if a moderate amount of surface breakdown occurs on coated windows which have been baked, the window temperature, although previously low, may suddenly increase markedly. This behavior may not necessarily be accompanied by any observable damage to the disk. Although these tests are not conclusive, the change in temperature seems to occur more readily on baked windows than on unbaked ones, although unbaked windows exhibit similar behavior at much higher power levels after an extended period of surface arcing.

---

*"Two-Mile Accelerator Project, Quarterly Status Report, 1 January to 30 April, 1964," SLAC Report No. 30, Stanford Linear Accelerator Center, Stanford University, Stanford, California; p. 40.

(b) Window with Heavy Coating

One of the earlier 0.111-inch-thick klystron windows was coated heavily and then tested in a routine manner.* The steady-state temperature at 60 MW, 54 kW was about 135°C. The window was then baked along with a klystron and retested under the same conditions. In this test the window became very hot and would have failed if it had been allowed to continue running at 60 MW.

A comparison of the heating behavior before and after baking is shown in Fig. 29. At t=0, power of 60 MW, 54 kW was passed through a window whose initial temperature was 70°C.

(c) Window Life Test

The six windows operating in series at power levels of 10 to 12 kW have been in operation throughout the quarter. After the windows had operated continuously (except for equipment maintenance) for 1000 hours, an automatic switch was introduced in the test stand. This device allows the windows to operate for five minutes, then turns them off for one minute, so that the power is applied suddenly every six minutes to the windows under test. The total running time previous to automatic timer operation was approximately 1240 hours, and 340 hours have been run with the automatic timer. To date, no window failures have been observed on this test.

(d) Pre-Testing of Klystron Windows

As mentioned earlier, a rash of window failures was encountered during this quarter in the klystrons being processed at Stanford. Investigation indicated that a change in the coating apparatus resulted in heavy coating on windows and potentially in the deposition of silicon oxide which might have come from glass wool initially used in the revised apparatus. It is possible that the resistive losses of the coating were sufficient in some of these windows to cause the failure.

As a result, and because it was noticed that the appearance of coated windows was changed, it was decided to test the windows individually on the ring before their installation on tubes. Two windows with a bluish

---

*Ibid.

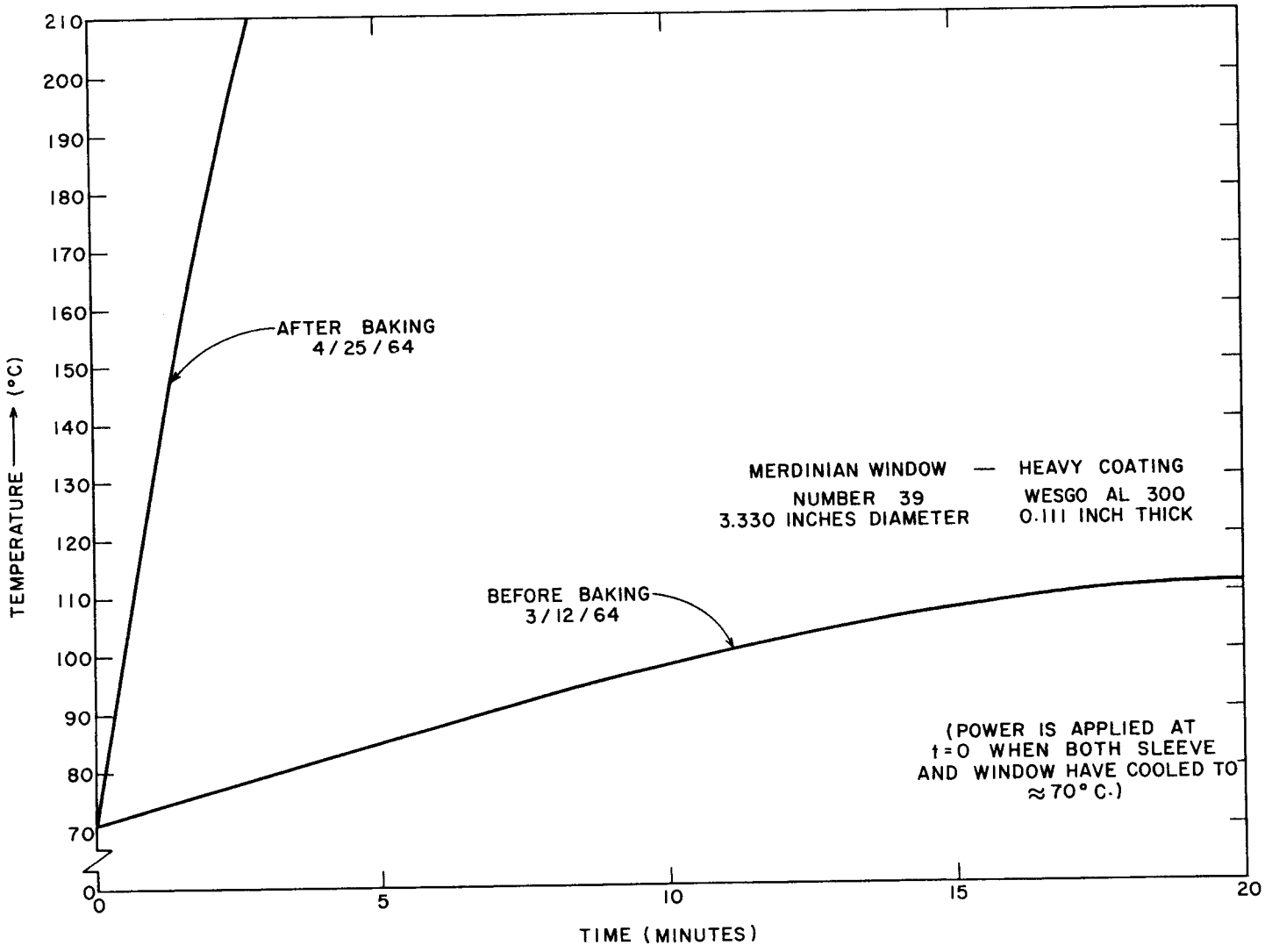

FIG. 29 - WINDOW TEMPERATURE vs TIME AT 60MW, 54kW

metallic appearance ran very hot: The first ran 200°C at 10 MW, 9 kW, and the second ran 150°C at 1.8 MW, 1.6 kW. The coating sputtering potential was then reduced for the next window in the hope that unwanted deposition from insulators, etc., would be kept to a minimum. This window did indeed run quite cool (<100°C at 24 MW, 22 kW).

After rebuilding the coating facility and eliminating the suspected source of the contaminants, six more windows were coated and tested. They were quickly evaluated on the basis of their temperature behavior. Of these, three were considered to be acceptable for installation on tubes (i.e., steady-state temperature at 24 MW, 22 kW $\leq$ 120°C), one was marginal (152°C), and two ran very hot (> 200°C) and would have failed if allowed to continue running at 24 MW.

It was discovered that the sputtering efficiency in coating these windows had been greatly reduced due to an error in wiring the titanium electrodes during the revamping of the coating facility. After correction, the two windows which ran very hot were recoated and tested again, and they now appear to be acceptable for installation on tubes. They reached steady-state temperatures of 110°C and 82°C, respectively, at 24 MW, 22 kW. It may be that these six windows originally had coatings varying from thin to almost nothing. Recoating and testing the other "hot" windows may bear this out.

The high power ring will be used as a window coating quality control until uniformly good results on window temperature warrant its discontinuance.

(e) Resistivity of Coated Windows

Measurements on several coated windows which failed thermally during tube tests or which heated excessively without multipactor during ring tests have shown very low surface resistivities (20 kilohms -- 20 megohms). The window coating apparatus has since been refurbished to correct the flaws suspected of having caused the low resistance coatings. Routine resistivity measurements of coated windows are now being made as a simple precaution against further window failures caused by low resistance coatings.

(f) Coated Grooved Alumina Windows

Two grooved AL-300 ceramics were coated with titanium and tested in the ring. One of these windows withstood maximum available peak and average power with no ill effects, while the other suffered punctures and internal damage at high peak power (63 MW). Both windows operated without glow. Additional coated grooved windows will be tested.

2. Effect of Tilt

Two more windows have been tested in the continued investigation of the effect of window tilt on performance. Both of the windows operated without multipactor heating or failure although one of the two had been mounted with significant tilt. This exception to an apparent correlation between tilt and window failure was complicated, however, by the fact that this window was part of a new group of AL-300 ceramics which showed some slight differences from the group used for other tilt tests. Further tilted window studies have been postponed until present data is analyzed more thoroughly and additional information is gathered on material properties and their variations.

3. Other Materials and Surface Finishes

(a) Boron Nitride Windows

Several samples of hot-pressed boron nitride were provided for evaluation as a possible window material. Although hot-pressed boron nitride is not vacuum tight, windows of this material could be made impervious by deposition of surface layers of pyrolitic boron nitride (sample windows of pyrolitic boron nitride were tested at SLAC two years ago*). Four boron nitride windows were tested, two of which had been baked to drive off moisture. The two unbaked windows both failed at moderate peak power (20-25 MW), while the baked windows withstood significantly higher powers. Results of tests to date indicate that some additional testing would be needed before evaluation can be made of the feasibility of boron nitride as a window material.

---

*"Two-Mile Accelerator Project, Quarterly Status Report, 1 April to 30 June, 1962," SLAC Report No. 1, Stanford Linear Accelerator Center, Stanford University, Stanford, California, pp. 47-48.

(b) Frenchtown 4462 Windows

Several Frenchtown 4462 windows, of the same material as those used by RCA, were obtained from Mark III and are being ring-tested for performance comparison with AL-300 windows. Although the geometry used for these tests is not identical to that of the RCA tube window, it is the same Model A geometry which has been used for tests on AL-300 windows.

Three windows have been tested to date, two of which failed thermally at ~ 14 kW; the other suffered apparent failure during peak operation at 65 MW (internal failure was suspected but opacity of the window material prevents verification of failure). Multipactor was observed on both of the windows that failed thermally, but not on the window that failed at high peak power. In one instance multipactor was visible only on the load side of the window, but it was observed on both surfaces of the other "hot" window. Surface temperatures at time of failure were 500° and 400°C respectively.

4. Material Studies

Investigation of various properties of alumina windows has been pursued during the quarter. As with window tilt studies, investigation of variations in window material is being undertaken to discover causes of unexplained inconsistencies in the operational behavior of apparently identical windows.

(a) Surface Studies

Electron microscope studies of window surfaces have been made of variations in surface texture of different batches of ceramic and of changes induced by operation at high power or high temperature. Some difference in surface roughness as a function of grinding technique was discovered between the last two batches of AL-300 windows, as was a slight change in average grain size. Effects of these variations will be examined in conjunction with window tilt studies.

Probably the most significant result of electron microscopy to date has been the discovery of changes of exposed crystal faces on windows of both Frenchtown and AL-300 which have been operated at excessively high temperature because of multipactor. The changes include fusion

of fracture patterns and growth steps and the appearance on flat crystal faces of "beads." The latter have been tentatively identified as diffusion of binder compounds during a rapid quench from high temperature. Both symptoms indicate the presence of extremely high local temperatures ($\approx 1600^{\circ}C$).

Additional studies of window microsurface, including electron diffraction, X-ray diffraction, and microprobe analysis, are being performed in the Material Science Department at Stanford by Dr. V. G. Macres and his staff.

(b) Secondary Emission Study

Work has begun in collaboration with Dr. Sonkin on a program to measure secondary emission from window materials. During this first quarter of the program, effort has been directed toward search and study of the literature on secondary emission and the design and fabrication of the apparatus to be used in making secondary emission measurements.

Parts have been fabricated for the first working model of the measurement apparatus and will soon be assembled for initial tests. The first tests will be conducted in a bell jar in order that any necessary changes in the test configuration can be made before it is mounted in its high vacuum envelope. Testing will begin during July.

(c) Thermal Conductivity

Following up experimental results which indicated an increase in thermal conductivity of some windows as a result of high temperature operation, a crude measurement was made which showed a higher thermal conductivity for a window which had run "hot" than for one which had not. Because of this result a more sophisticated measurement set-up has been designed for use in more precise measurements of thermal conductivity.

I. SUB-BOOSTER KLYSTRONS

During the quarter, 14 sub-booster klystrons were received and tested; in addition, two klystrons received in the previous quarter were acceptance-tested this quarter. Four of the 16 tubes tested were rejected for various reasons.

Regular checks of shelf life on sub-booster klystrons in-house are being continued, and of ten tubes tested this quarter, four were returned to Eimac for replacement. Of the tubes in operation, two were found to be outside specifications within the warranty period. Four other tubes have in excess of 1700 hours of operation, with one of these having operated more than 5600 hours.

Some of the problems which had caused rejection of tubes previously, such as phase and amplitude jitter in excess of specification, appear to be resolved. However, the percentage of tubes still failing on shelf life indicates that the virtual leak problem (or micro leaks) may not have been fully solved.

IX. MARK IV PROGRAM

A. OPERATION

The Mark IV accelerator was on a full operating basis throughout the quarter. Operations of two shifts per day, five days per week were regularly scheduled for several experimenters.

There were no scheduled shutdowns for major installation work. A few unscheduled shutdowns occurred due to failures in low-power electronics equipment and other miscellaneous troubles. The total time for all shutdowns was a relatively small fraction of the entire operating time for the quarter.

The high power electronic equipment performed well. Both of the klystrons and the four type 7890 thyratrons, all of which had been in use at the beginning of the quarter, were apparently in good condition as the quarter ended.

The actual high voltage operating time of each of the klystrons and thyratrons was approximately 665 hours during this quarter. The total accumulated running time of the thyratron switch tubes as of the morning of July 1, 1964, was as follows:

Modulator	Heater Hours	Anode Hours
1	3464	1552
2	3088	1558

At the end of the previous quarter, calculations to determine the no-load electron energy gain versus peak input rf power in the second acceleration section had been begun but were not complete. From the measurements made, these calculations give a proportionality factor of 10.6, or

$$E_2 = 10.6 \quad P_{in}$$

where E_2 is in MeV and P_{in} is in megawatts. The experimental error in the number 10.6 is assessed at about 1 per cent, although a complete

analysis has not yet been made of all the calibrations entering into the experimental measurements.

Owing to the use of equipment which had not been available until recently and to cross checking performed during the work, this measurement of energy gain versus power is the most accurate one that has been made at Stanford. Considerable care was taken during the floating wire calibration of the bending magnet. The wire tension and current were measured with accurate weights and a good, calibrated milliameter, respectively. The wire was supported on a pulley having an air bearing.

The value of the peak input rf power was determined by measuring average rf power and the rf pulse width, the pulse repetition rate being known. The average rf power was measured calorimetrically into full-power waveguide water loads while taking bolometer readings to calibrate directional couplers. A sampling system with chart recorder was used to obtain rf pulse shapes from detectors whose detection law was separately determined.

B. MACHINE MODIFICATIONS

As stated above, there was no major installation work on the machine this quarter. However, a few difficulties were eliminated in the low-power electronics equipment.

The main water-to-air heat exchanger was put in several years ago, before it was anticipated that the Mark IV accelerator system would be running at its present high level of power, and before the need developed for separate, closely regulated temperature control systems on each of the two acceleration sections. Because of the inadequacy of the present system to maintain temperature control on warm days, when operating at full power, a supplementary heat exchanger was ordered. It is expected that the exchanger will arrive early in the next quarter and can be installed shortly after its arrival.

C. PROGRAM FOR THE NEXT QUARTER

The two shift per day schedule will continue through most if not all of the next quarter, as it still appears that there will be a heavy demand for use of the machine for several more months.

A scoping survey was made and a report was submitted to project management. This report covers several possible plans for continuing Mark-IV type activities at the project site. It is expected that a decision can be made next quarter as to the general line of approach.

X. BEAM SWITCHYARD

A. GENERAL

The most important group objective during this quarter was to advance the designs of all equipment and systems to assure their compatability with the switchyard housing, which is scheduled to go out for bid next quarter. This objective was reached for the most part, although some systems have not progressed very far into hardware design. Many minor changes were made in the housing design as a result of this effort to achieve compatability.

The Materials Handling System proposals were received and are in the process of evaluation.

The electrical and water distribution systems and the vacuum pumping system preliminary design reports have been completed.

B. INSTRUMENTATION AND CONTROL

The design of the instrumentation requirements in the switchyard is almost completed. The schematic layout in Fig. 30 shows all components, and the status of the system is reviewed below.

1. Beam Monitors

a. Current (I)

Ferrite core transformers will be used to measure beam current intensity. The sensitivity is 2.3 volts/amp. A satisfactory prototype has been made, and construction will be started after some modifications to the vacuum housing are completed.

The electronics is being developed, and will provide for average current display and dynamic pulses on a CRT if desired.

An integrator is being developed to measure total charge with an absolute precision of 1% and a stability of 0.1%.

b. Position (P)

The Accelerator Physics group is developing a beam position monitor with a 3-inch by 1.8-inch beam opening.

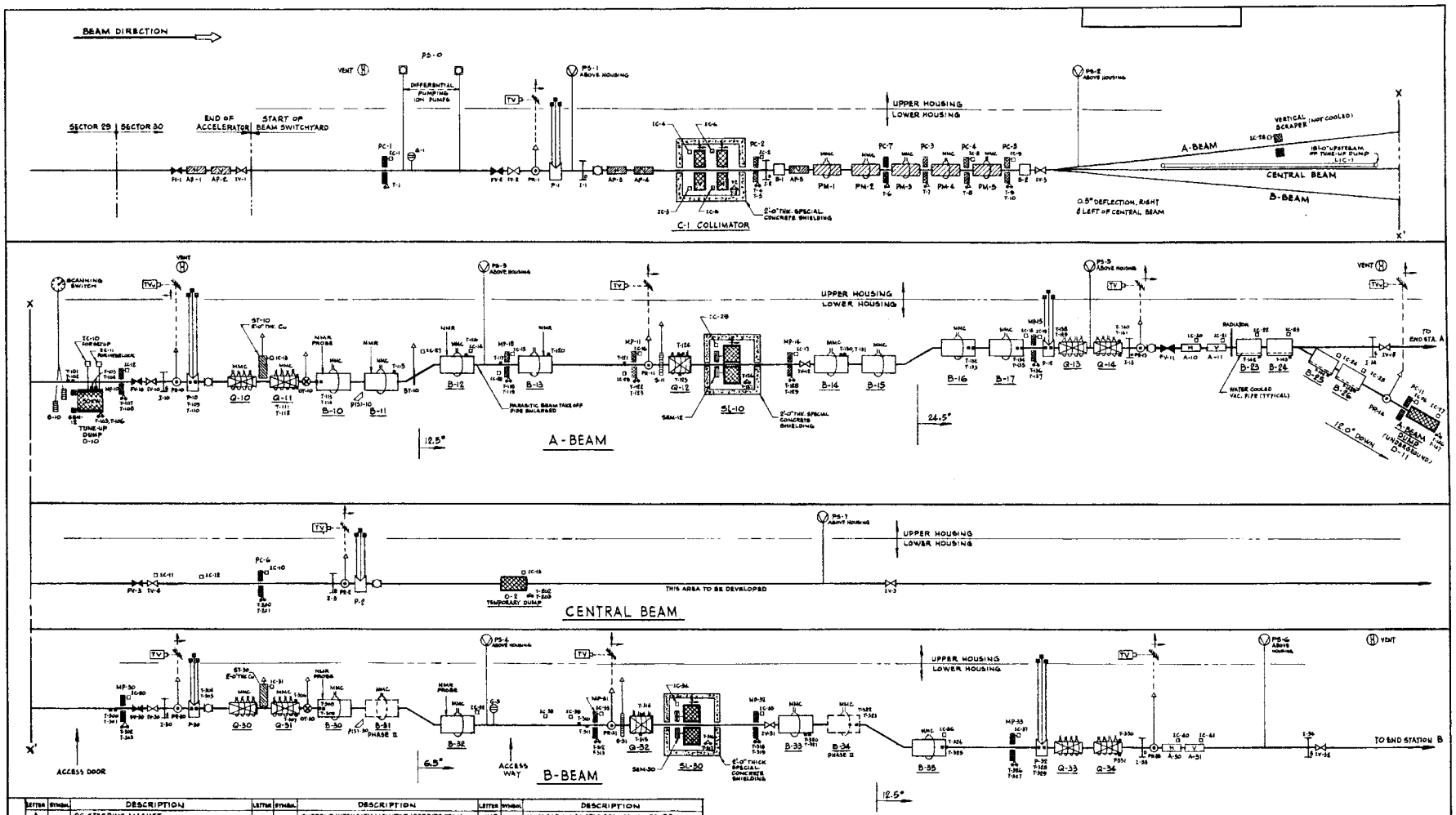

LETTER	SYMBOL	DESCRIPTION	LETTER	SYMBOL	DESCRIPTION	LETTER	SYMBOL	DESCRIPTION
A		DC STEERING MAGNET	I		CURRENT INTENSITY MONITOR (FERRITE TRANSFORMER) I = SINGLE, I = DOUBLE (FOR INTERLOCK)	NMR		NUCLEAR MAGNETIC RESONANCE PROBE
AP		PULSED STEERING MAGNET				OT		OPTICAL TARGET
B		DC BENDING MAGNET	P		BEAM POSITION MONITOR (MICROWAVE CAVITIES, WITH 3 WAVEGUIDES)		TV	TELEVISION CAMERA
Q		QUADRUPOLE MAGNET				P(S)		SYNCHROTRON LIGHT MONITOR (ADJUSTABLE)
PM		PULSED MAGNET	PR		BEAM PROFILE MONITOR	T		TEMPERATURE MONITOR (PLATINUM RESISTANCE) MOUNT ON SIDES, MOUNT TOP OR BOTTOM
PC NP		PROTECTION COLLIMATOR (OR MAGNET PROTECTOR)	S		BEAM ENERGY SPECTRUM INDICATOR			
SL		ENERGY DEFINING SLIT						DIFFERENTIAL TM, WATER INLET/OUTLET
ST		BEAM STOPPER	SEM		SECONDARY EMISSION MONITOR			SPARE SPACE FOR INSTRUMENT
FV		FAST ACTING VACUUM VALVE						RETRACTABLE
IV		ISOLATION VACUUM VALVE (SLOW ACTING)			MIRROR			
G		VACUUM GAGE	IC		IONIZATION CHAMBER			ADJUSTABLE, TWO PLANE
PS		VACUUM PUMPING STATION	LIC		LONG (HELIAX) IONIZATION CHAMBER	MMC		MAGNETIC MEASUREMENT PICK-UP COIL
IP		ION PUMP	BT		BEAM TARGET			

FIG. 30--Schematic layout of BSY instrumentation.

c. Profile (PR)

A prototype of the intercepting Cerenkov cell to be used as a beam profile indicator is under construction and will be tested at the Mark IV accelerator.

As an alternative method, a ZnS screen changer is being developed. This changer contains 48 ZnS screens that may be used one after the other until all are burned out. Vidicon cameras will be used for observation.

d. Synchrotron Light

The vacuum chamber, optical system, and optical target for alignment are well underway.

The image orthicon television camera for observation in this system will be located on top of the 32 feet of shielding. The light will be transmitted through an optical black pipe.

2. Spectrum Instrumentation

a. Spectrum Analyzer (S11, S31)

A model spectrum analyzer that fits into the final vacuum chamber is close to completion. Research and development work on the scanning electronics and display is well advanced.

b. Spectrum Monitor (S10)

The rough spectrum monitor to be placed in front of the tune-up dump has been designed. Because this monitor is very simple, a prototype will not be fabricated.

3. Protection

The number, location, power capacity, and hole sizes for the protection collimators and scrapers (PC) have been settled. Design of these items has begun.

The protection system instrumentation will include ionization chambers, secondary emission monitors, and platinum thermometers. Work on these items and on the associated electronics is in preliminary stages.

The magnetic field instrumentation will include fixed frequency NMR monitors, coil signal integrators, and pulsed magnet magnetometers. This equipment is under design.

4. Controls

It is planned to use digital control for determining magnet current, slit and collimator position, etc. Design work has begun.

5. Data Processors

A system is being designed using a small computer for data acquisition, sequential status and alarm recording, and digital control.

C. MAGNETS

Orders have been placed for the following prototype magnets: 0.1° pulsed bending magnet, 3° bending magnet, and the 8 cm quadrupole magnet. Delivery is expected early in the next quarter.

D. POWER SUPPLIES

1. DC Power Supplies

Two series transistor regulators rated at 1000 amps and 15 kW maximum dissipation are now undergoing tests with the 100-volt 1000-amp power supplies previously ordered for magnet testing. This combination must be current regulated to within $\pm$ 0.005%.

2. Pulsed Power Supplies

Two prototype pulsed power supplies for the pulsed magnets have been built and tested successfully for periods of several hours at full power and rated repetition rate of 360 pulses per second. The two prototypes differ in the type of ignitrons used for switching the energy into the magnets. One uses type GL-5630 ignitrons (high voltage, low current type), and the other uses GL-7736 ignitrons (relatively low voltage, high current type). The pulses are being operated to check the ranges of the operating parameters and to accumulate as much reliability data as possible.

Specifications for the procurement of the power supplies to be installed in the beam switchyard are being prepared.

E. VACUUM CHAMBER SYSTEM

Prototype evaluation testing is in progress on two different designs of remotely operable quick-disconnect couplings for the vacuum system.

One is a proprietary design of the Aeroquip Corporation and the other is a SLAC design using an indium seal.

Design and fabrication of a fast-acting 6-inch gate valve for vacuum has proceeded to the point of testing the seal of the gate against the seat.

The 60 kW tune-up dump and the 240-foot divergent chamber are in the final design stages.

F. BEAM DUMPS

Concepts for the beam dump, dump window, window removal, and dump base or cart are in the layout stage. It is presently envisioned that a single vortex water-filled cylindrical tank with eccentric beam window will be used.

G. COLLIMATOR, SLITS

The present idea, a forest of closely-spaced thin-wall aluminum tubes in which cooling water circulates, appears to be feasible for a 2.2 MW beam of 0.3-cm radius. A 0.1-cm-radius beam may cause permanent deformation of approximately the first fifty tubes. This concept appears to be the only simple design capable of taking 2.2 MW. Its major difficulty is that it requires a large number of vacuum-to-water welds; the reliability of the welds must, therefore, be well established. Welding tests are proceeding in our shops, and negotiations for electron-beam welded samples are underway.

H. MAGNET SUPPORTS

Prototype supports for the 3° bending magnet and the 8-cm quadrupole were received. The 3° bending magnet support was successfully tested with a 30,000-pound load and the 8-cm quadrupole support was tested with a 6000-pound load. The supports enable six degrees of the magnets to be moved in three directions and rotated in three planes.

I. BSY ALIGNMENT

The accelerator alignment technique (laser beam) will be extended into the beam switchyard for about 750 feet to form the basic BSY reference line. Optical tooling techniques, like those developed by the

aircraft industries, and precision survey techniques will be used to position the beam transport system equipment with respect to this basic reference line.

XI. TARGET AREA DEVELOPMENT

A. DATA ASSEMBLY BUILDING

Title II work on the Data Assembly Building is in progress. The construction package is scheduled to go out for bid late in the next quarter.

B. END STATIONS A AND B

Title II work is in progress on both of these buildings. The only major change in criteria since the last report on the end stations* has been the addition of a counting house on the west wall of End Station A. This counting house, which will have a floor area of 1500 square feet, will sit at an elevation of 45 feet above the floor of End Station A on top of the shielding fill over the Beam Switchyard.

C. TARGET AREA SITE IMPROVEMENTS AND UTILITIES

The Title I report on these facilities will be issued next quarter. The overall plan of the target area, as shown in a previous report,** is still basically correct.

The target area utilities will be distributed around the end station areas by a system of underground utility tunnels. The Research Area substation, located on top of the Beam Switchyard and west of End Station A, will supply the end station areas with about 30 MVA of power at 480, 4160, and 12,470 volts. Low conductivity water will be distributed from cooling towers located in the utility yard southeast of the Data Assembly Building. The initial dissipative capacity of the cooling towers will be 22.5 MW at a wet bulb temperature of 68°F, and can be increased to 30 MW by the addition of another cooling tower. The piping is being sized initially for the full 30 MW capacity.

---

*"Two-mile accelerator project, Quarterly Status Report, 1 October to 31 December 1963," SLAC Report No. 27, Stanford Linear Accelerator Center, Stanford University, Stanford, California (February 1964); pp. 76-80.

**"Two-mile accelerator project, Quarterly Status Report, 1 July to 30 September 1963," SLAC Report No. 23, Stanford Linear Accelerator Center, Stanford University, Stanford, California (October 1963); pp. 68-9.

XII. PRE-OPERATIONS RESEARCH AND DEVELOPMENT
(Contract AT(04-3)-515)

A. THEORETICAL PHYSICS

1. Group C

In the continuing study of the wide-gap spark chamber, tracks have been observed of cosmic ray particles which travel between and roughly parallel to the spark chamber plates. The gap width was four inches. A Marx generator capable of providing up to 200 kV pulses was used, and the required narrow pulse ($\approx$ 10 nsec) was obtained by using either a "shorting" spark gap or an inductor-resistor chain across the spark chamber. One of the plates of the spark chamber was made of conducting glass in order to obtain the two orthogonal views of the tracks. The tracks appear as a series of short streamers along the $\vec{E}$ direction. These streamers originate from the individual ions produced by the passing particle. The track definition in the direction along the E field seems very good, and the possibility of measuring dE/dx in such a chamber is being studied.

2. Group D

The fundamental interest of this group is in performing photo- and electroproduction experiments involving multibody final states. The detection system involves the use of spark chambers and a large solid-angle magnetic analysis system.

It has been decided that for reasons of flexibility the experiments should be performed in target area A rather than in the parasitic 6° beam. The parasitic beam will not be developed at this time, but provision will be made to provide such a beam later, if it is desired.

Design of a photon beam in target area A has been started.

Calculations are being done to optimize the design of the analyzing magnet.

Experimental work is being done to improve the performance of large-gap spark chambers.

In addition, studies are being made of a μ pair production experiment, and calculations are being made of the size of the Compton

diagrams involved in the production.

3. Group E

A very successful measurement of the reaction $p + p \rightarrow d + \pi^+$ was completed at the Cosmotron of the Brookhaven National Laboratory and was reported in Physical Review Letters.* A major increase was made in the apparatus and staff for analyzing all bubble chamber film and some spark chamber film at SLAC. By the end of the quarter two scanning tables and two digital measuring machines, large enough for handling all existing bubble chamber film formats were put in operation. One more bubble chamber measuring machine is on order, and construction has begun on two more bubble chamber scanning tables and on two spark chamber scanning and measuring projectors. Analysis of $\pi^- + p$ and $K^- + d$ bubble chamber films continued.

Major construction was started for a neutron + proton elastic scattering experiment to be carried out at the Bevatron of the Lawrence Radiation Laboratory.

Development also continued of special fast electronic circuits for use with the new very fast developmental photomultipliers.

B. EXPERIMENTAL PHYSICS

1. Physical Electronics

A development program has been undertaken whose purpose is to produce low density KCl films of high secondary emission coefficient for use in a variety of very fast electronic detection apparata. Upon production of suitable films, the secondary yield will be measured not only at a few keV, but also in the multi-MeV region. Although the secondary emission process from high energy primaries is not well understood, it is believed that these foils may produce up to three secondaries per transmitted primary, thus making quite feasible a multi-foil relativistic rise detector for separating particles of the same momentum but of differing rest masses, in momentum ranges of great interest to SLAC. During the quarter, low density films of a few percent of bulk KCl density were

* O. E. Overseth, et al., Phys. Rev. Letters 13, 59 (1964).

produced on glass and aluminum foil substrates, as determined by weighing and optically measuring film thickness. Production of thin aluminum oxide substrates is being studied; such substrates will be available in the next quarter, when secondary electron coefficient measurements will be made at several keV.

Experiments are planned and apparatus is being prepared to measure secondary yield from nickel foils with precisely specified surface conditions, in order to illuminate the fundamental process of secondary emission from high energy primary electrons.

C. MAGNET RESEARCH

1. Pulsed Magnets

A pulsed flux concentrator, liquid nitrogen cooled, was built in a joint MIT-SLAC effort and used at Brookhaven for the λ experiment. The magnet data was:

Peak field	150 kG
Pulse duration	50×10^{-3} sec
Useful volume	≈ 10 inch^3
Peak power	$\approx 3 \times 10^6$ watts

This magnet, which was pulsed with more than 500,000 pulses, will be used for further experiments. A joint paper is in preparation.

The pulsed magnet laboratory, due to space considerations, is not yet ready for operation. The layout for a 500-kilo joule, 5-kV lab has been completed. The capacitor banks have been received and will be installed in the Heavy Assembly Building.

A pulsed bubble chamber magnet with the following specifications is under design:

Maximum field in the gap	≈ 75 kG
Coil inner diameter	18 inches
Chamber inner diameter	12.6 inches
Chamber axial length	10 inches
Pulse duration	$30\text{-}50 \times 10^{-3}$ sec
Pulse repetition rate	one per second

Magnet coolant	liquid nitrogen (later stage: liquid hydrogen)
Peak field energy	1.2×10^6 joules
Peak current	300×10^3 amps
Peak voltage	500 volts

The chamber body is made of high tensile glass filaments impregnated with a modified epoxy. In order to test the fatigue behavior of the filament-wound structure, a test program was initiated. Three stainless steel dewars with an inner diameter of eight inches have been built to carry out the tests, and samples for unidirectional tests have been ordered. The samples will be cooled to liquid hydrogen temperature (using a helium refrigerator) and tested in the dewars. All mechanical parts are built, and the fatigue tests will begin during the next quarter. After the magnet has been built, tests to study magneto resistance effects and heat transfer problems, at liquid nitrogen temperature, will be carried out at the National Bureau of Standards, Boulder, Colorado.

2. Superconductive Magnets

The main objective of this investigation is to study the feasibility of using superconductive magnets in combination with high energy physics experiments. Several problems are under consideration: radiation properties of superconductive materials; split coil properties; effect of impregnation; and effect of iron. In order to study these problems, a superconductive coil which has produced 39 kG has been built. Other coils are being built with similar configurations, but with different insulation; these will be carefully studied and tested. Setups for cooling, energizing, and testing superconductive as well as cryogenic magnets have been completed and are working satisfactorily.

A proposal for a one-meter superconductive bubble chamber magnet for use in End Station B has been worked out. Preliminary studies indicate that a superconductive magnet may prove more satisfactory than a room temperature magnet; work on this project is continuing.

3. Room Temperature Magnets

A water-cooled magnet to be used in combination with the one-meter liquid hydrogen bubble chamber has been designed. The magnet will be of a conventional type and will meet the following specifications:

Field in the center	20 kG
Chamber diameter	1 meter
Chamber axial length	0.5 meter
Field homogeneity over 50 cm axial length	5%
Magnet power	2.6×10^6 watts

A complicated solenoidal magnet has to be designed for focusing the positron beam. The required axial field distribution over a length of 40 feet was shown by DeStaebler* to be

$$B = B_o \left(1 + \frac{B_o Z}{67}\right)^{-1}$$

The field at $Z = 0$ is $B_o = 20$ kG. In order to satisfy this requirement, an iron-bound solenoid with 42 kG peak field will be built upstream in front of the radiator. The power requirement for these solenoids is 1.3×10^6 watts, and the solenoids are water cooled. Computer programs for the ampere-turn distribution have been worked out, and the actual field fitting to the orbit program is now being made. The sextupole-quadrupole magnet for the off-axis injector** has been manufactured and tested. Due to a smaller sextupole component in the horizontal plane than that calculated, the magnet will be reworked. The off-axis injector bending magnets with rotated pole ends have been tested and seem to be satisfactory. Further field plots are in preparation.

---

*H. DeStaebler, private communication.

**See "Two-mile accelerator project, Quarterly Status Report, 1 July to 30 September 1963," SLAC Report No. 23, Stanford Linear Accelerator Center, Stanford University, Stanford, California (October 1963); pp. 71, 73.

4. Irradiation Tests

Mechanical, electrical, and fatigue properties of glass fiber impregnated with epoxy have been determined using direct electron irradiation with the Mark IV accelerator.

A joint program with Berkeley has been initiated to make low yield fatigue tests using the Livermore reactor.

Another test, to irradiate samples when they are constantly under voltage, has been started. The test apparatus has been built and the final tests are scheduled to begin during the next quarter with the Mark IV accelerator. The contamination of water due to irradiation effects is now under test at Mark IV.