SLAC-PUB-9211
May 2002

Cavity BPMs for the NLC*

Ronald Johnson, Zenghai Li, Takashi Naito†, Jeffrey Rifkin,
Stephen Smith, and Vernon Smith

Stanford Linear Accelerator Center, 2575 Sand Hill Road, Menlo Park, CA 94025,USA

Abstract

The requirements on the Beam-Position Monitor (BPM) system for the proposed Next Linear Collider are very stringent, especially the requirements for position stability. In order to meet these requirements it was decided that cavity BPMs were the best choice. A pair of cavities resonant at 11.424 GHz was designed in a monolithic block. The dipole mode xy-cavity uses a novel coupling scheme that (in principal) has zero coupling to the monopole mode. The other cavity is resonant for the monopole mode and is used to determine the phase. Comprehensive simulations were performed before completion of the mechanical design and production of the first prototype. These results and subsequent tests of the prototype will be presented.

Submitted to the 10th Beam Instrumentation Workshop
Brookhaven National Laboratory
May 6-9, 2002

* Work supported by Department of Energy contract DE-AC03-76SF00515
† Permanent address: KEK, High Energy Accelerator Research Organization, 1-1 Oho, Tsukuba, Ibaraki 305-0801, Japan

Cavity BPMs for the NLC

Ronald Johnson, Zenghai Li, Takashi Naito[§], Jeffrey Rifkin, Stephen Smith, and Vernon Smith

Stanford Linear Accelerator Center, 2575 Sand Hill Road, Menlo Park, CA 94025,USA

Abstract. The requirements on the Beam-Position Monitor (BPM) system for the proposed Next Linear Collider are very stringent, especially the requirements for position stability. In order to meet these requirements it was decided that cavity BPMs were the best choice. A pair of cavities resonant at 11.424 GHz was designed in a monolithic block. The dipole mode xy-cavity uses a novel coupling scheme that (in principal) has zero coupling to the monopole mode. The other cavity is resonant for the monopole mode and is used to determine the phase. Comprehensive simulations were performed before completion of the mechanical design and production of the first prototype. These results and subsequent tests of the prototype will be presented.

INTRODUCTION

Plans for the Next Linear Collider (NLC)[1,2] that are being developed at the Stanford Linear Accelerator Center and elsewhere will include very stringent requirements on Beam-Position Monitor (BPM) systems. One of the more difficult requirements is that of position stability in the main linacs. This requirement is driven by the necessity to establish and keep precise optics to prevent emmitance growth.

A BPM is placed at each quadrupole along the main linac. There are 1450 of these devices, designated Q-BPMs. They will be rigidly attached to the quadrupole and the whole assembly is mounted on precision movers. Beam based alignment will be used to determine and adjust the centers. But because beam based alignment is an invasive procedure incompatible with colliding for luminosity, the accelerator components must remain stable over a long period of time. The requirements for these Q-BPMs are listed in Table 1.

There are two obvious choices for the Q-BPMs, striplines or cavities. Although striplines have some advantages, they have two major disadvantages. First, the signal of interest is the difference between two large signals from opposing electrodes. Practically, this means that the difference must be obtained with precision analog electronics or with digital electronics with a large number of effective bits. For a cavity BPM there is a null signal when the beam is centered. Second, mechanically the striplines are more complicated than a cavity. The four striplines must be electrically

[‡] Work supported by Department of Energy contract DE-AC03-76SF00515

[§] Permanent address: KEK, High Energy Accelerator Research Organization, 1-1 Oho, Tsukuba, Ibaraki 305-0801, Japan

Table 1. Q-BPM Requirements

Parameter	Value	Conditions
Resolution	300 nm rms	For10^{10} e^- single bunch
Position Stability	1 μm	Over 24 hours
Position Accuracy	200 μm	Wrt the quad magnetic center
Position Dynamic Range	±2 mm	
Charge Dynamic Range	$5x10^8$ to $1.5x10^{10}$ e^-	
Number of Bunches	1 - 190	
Bunch Spacing	1.4 ns	

isolated from each other and ground (at least at one end). For the NLC main linacs the beam tube inside diameter is only 12 mm. Then the signals must be coupled out through vacuum feedthroughs (introducing the possibility of differential expansion). A cavity can be machined out of a single block of metal with the same tolerances as the accelerating structures, 0.5 μm. The mechanical center can be fiducialized to the outside with errors of this order.

Although it was determined that the resolution requirement could be met with a stripline, it was not clear that the mechanical stability of striplines would meet the position stability requirement. The decision was made to begin a research project on a cavity BPM that could meet the NLC requirements.

CAVITY DESIGN

Electrical

The accelerating structures of the NLC main linacs operate at 11.424 GHz. Although other frequencies could be used, the resonant frequency for the cavity BPMs was selected to be the same as the structures for two primary reasons. First, the Q-BPMs are to provide a phase reference signal to the low-level rf control system. Second, this frequency is consistent with a compact design and well established machining techniques.

A simple cylindrical cavity was chosen, but with a novel design for bringing the signals out of the cavity[3,4]. A rectangular waveguide at right angles to the cavity intercepts the cavity only at the corner. The coupling is through the magnetic field and only couples to the TM11 mode. The monopole (TM01) mode does not couple to the waveguide. This is illustrated in Figure 1. Four of these waveguides intercept the cavity symmetrically horizontally and vertically. A 3-D view of the cavity is shown in Figure 2. Also shown in this figure is the signal out of the waveguide for a beam 1.0 mm off center in x. These results are from MAFIA simulations. Note that signals from the vertical waveguides give x-offsets and signals from the horizontal waveguides give y-offsets.

The dimensions of the cavity are 29.426 mm in diameter and 3.0 mm thick. The waveguides are 18.0 mm by 3.0mm by 30.0 mm. The calculated Q of the cavity (with

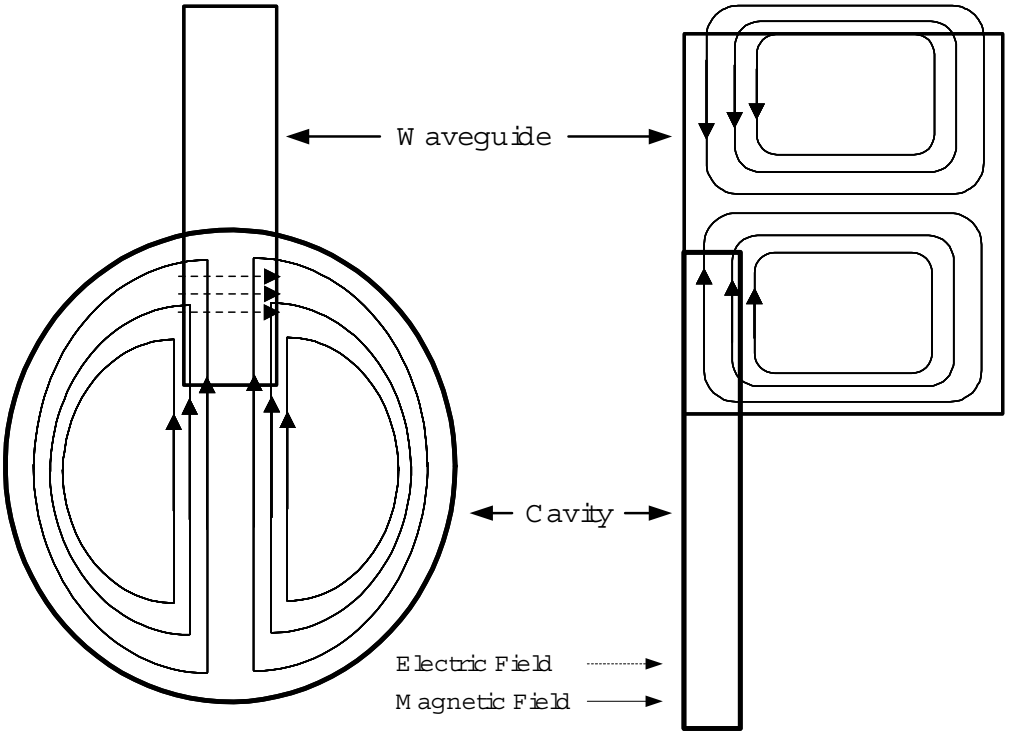

FIGURE 1. Coupling scheme for the cavity BPM. The magnetic field lines illustrate the coupling of the dipole mode to the waveguide.

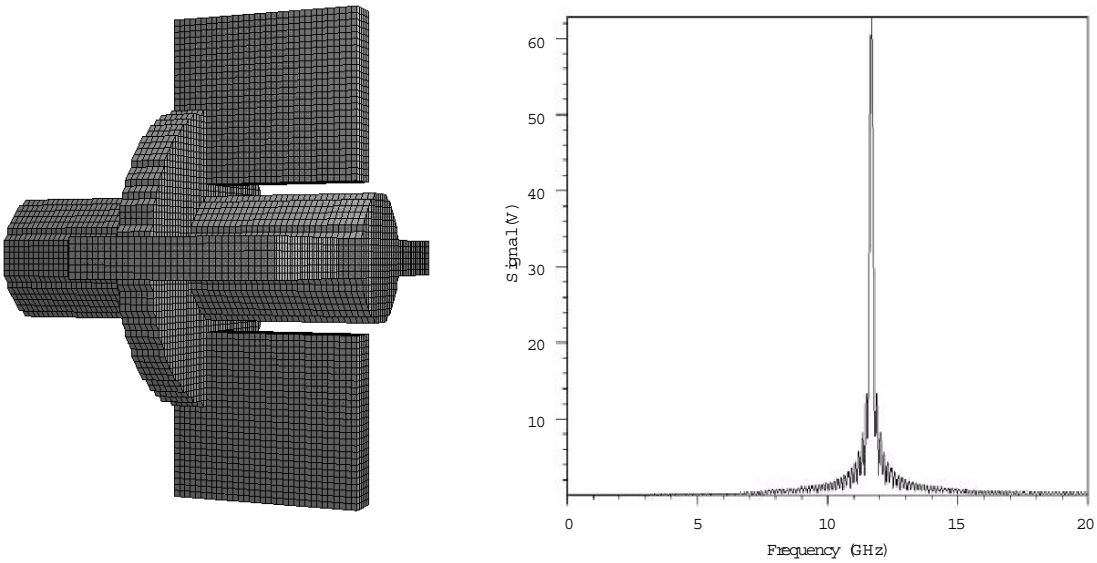

FIGURE 2. 3-D view of the cavity as designed for MAFIA simulations and the signal out of the waveguide coupler. (Only the dipole mode is coupled out.)

the waveguides present) is 1000. Further MAFIA simulations were performed to set tolerances on these dimensions and to determine the sensitivity of the response (especially the suppression of the monopole mode) to errors in machining or construction. For example even a large offset of 0.6 mm (from the ideal radial line) for one of the waveguides introduces a signal from the TM01 mode that is just equal to the TM11 mode. (The beam was offset 1.2 mm for this simulation.)

Also a cavity for phase reference was designed for the monopole mode resonant at 11.424 GHz. The cavity dimensions are 24.711 mm in diameter and 2.0 mm thick.

Mechanical

The body of the cavity BPM was machined out of a single block of copper (OFE Class II) 43.0 mm in length and 34.0 mm in diameter. The xy-cavity and coupling slots were machined at one end and the phase cavity at the other end. Copper end caps 5.0 mm thick were machined and will be brazed on the body to complete the cavities. A 3-D view of the cavity is shown in Figure 3.

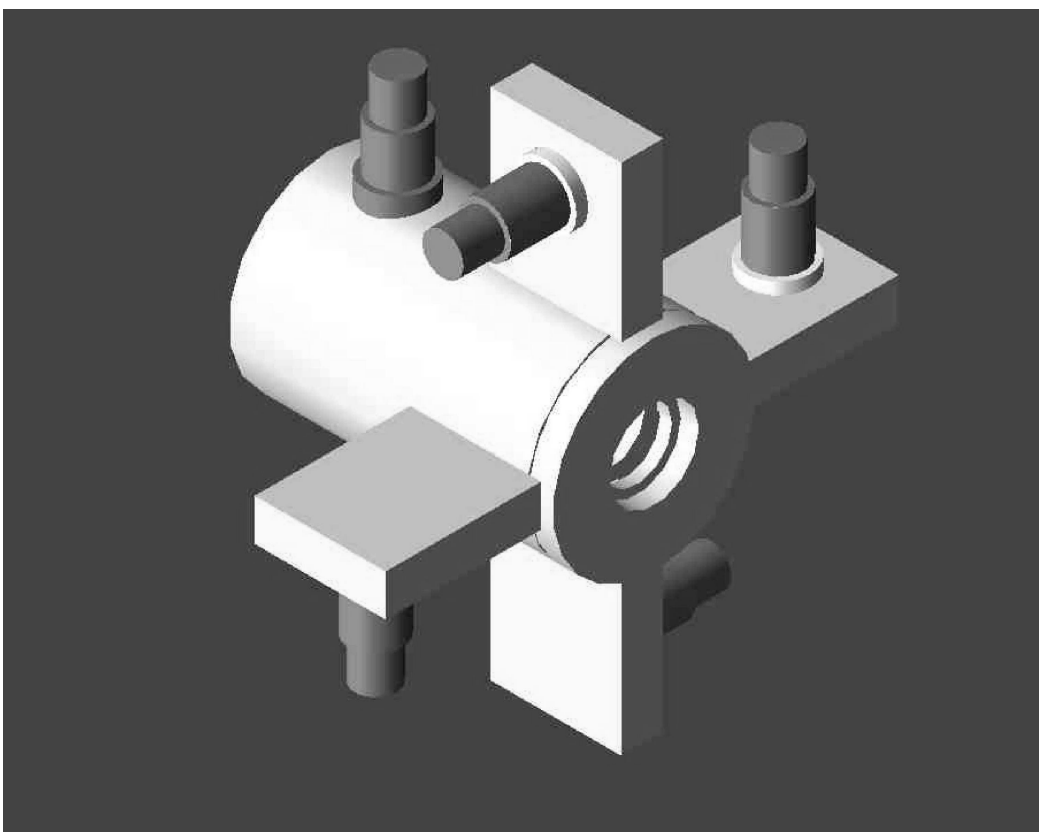

Figure 3. A 3-D view of the cavity BPM as mechanically designed.

The waveguides are formed from two pieces of copper brazed together and then brazed to the cavity body. Although only two waveguides (horizontal and vertical) provide full information for beam position, waveguides at each quadrant were

designed to preserve symmetry. This also allows signals from opposite waveguides to be phase shifted by 180° and added to reduce interference from some other modes. In order to couple the signals from the cavity to coaxial cable, vacuum feedthroughs that also serve as antennae are mounted on the face of each waveguide. For the phase cavity a single feedthrough couples to the cavity.

Tolerances for the critical dimensions of the cavity and waveguide were specified to be 1.0 μm. However the actual parts produced for this first attempt did not meet many of these tolerances. For example the diameters of the xy and phase cavities are +8 and -2 μm, respectively, off their specified values. These errors will affect the cavities resonant frequency and other errors may affect coupling. These are achievable tolerances and the actual part was not bad considering that it was a first attempt.

PRELIMINARY TEST RESULTS

Because there was a delay in delivering the vacuum feedtroughs, it was decided to delay brazing of the cavity body and waveguides. Instead a test fixture was constructed in which preliminary tests could be conducted. The test fixture was designed to clamp around the cavity body with slots cut to match the waveguide slots of the cavity. On the outside of the test fixture WR75 waveguide to coaxial cable adaptors were attached. The test fixture also clamped the BPM cavity end plates in place.

This assembly was clamped to an optical bench. An antenna (a quarter wave of the center conductor of a RG141 hardline coaxial cable) was mounted on a xyz stage. The stage was actuated with precision micrometers (sensitivity of 0.07 μm). Measurements were made using a 20 GHz vector network analyzer. The spectra for frequency scans at antenna positions of +1, 0, and –1 mm (in x) are shown in Figure 4.

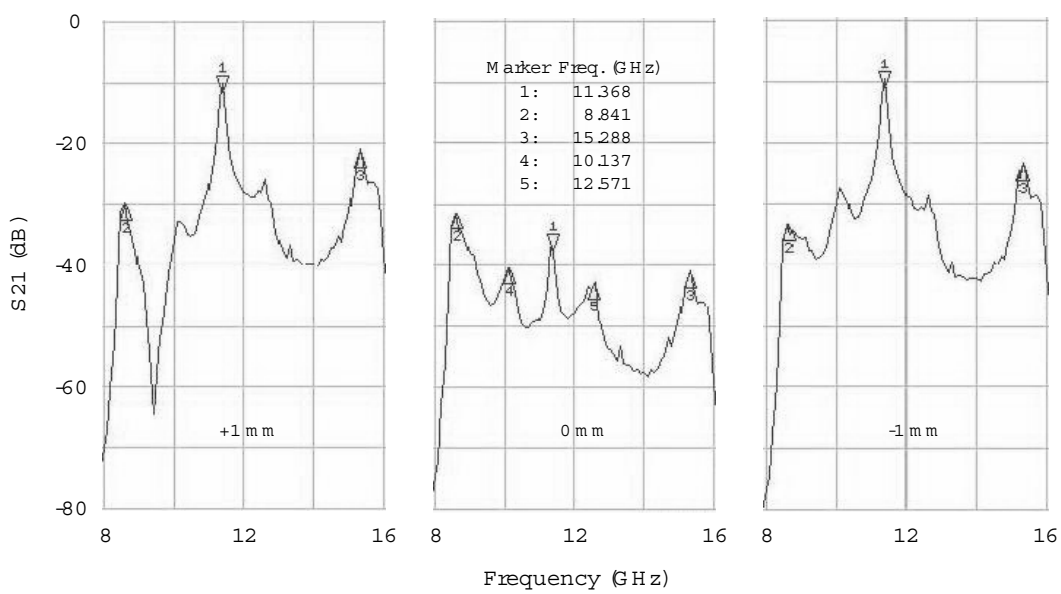

Figure 4. VNA spectra for three x positions of the antenna.

These spectra illustrate many of the features of the cavity BPM. The TM11 mode is at 11.380 GHz, 44 MHz off the design value. However in this test fixture the modes are perturbed differently than in the device as designed. The TM01 mode is at 8.547 GHz and is suppressed by about 20 dB from the TM11 mode for the antenna 1 mm off axis. The peak at 15.388 GHz is due to the TM21 mode. The peaks at 10.137 and 12.571 GHz are predicted by MAFIA to be perturbations due to the antenna. Spectra for coupling from one port to either an adjacent port or the opposite port were also taken. The results are summarized in Table 2.

Table 2. Cavity BPM resonant structure.

Mode	**MAFIA**	**Measured**			
	Frequency (GHz)	**Frequency (GHz)**	**Q**	**Coupling 180° (dB)**	**Coupling 90° (dB)**
TM01	8.724	8.547	~200	-66	-60
TM11	11.43	11.38	~340	-25	-50
TM21	15.92	15.39		-10	-10

Although the Qs are lower than predicted, these are preliminary results from the test fixture where the cavity is simply clamped together. There is good suppression of the TM01 mode, ~30 dB and of xy coupling, ~25 dB. At present no measurements for the phase cavity have been made.

Following the measurements of the mode structure, scans of response as a function of antenna position were taken. In these measurements both the amplitude and phase were obtained so that a full analysis could be performed. The results are shown in Figure 5. This plot is made by fitting the data to a straight line in the three dimensional space of amplitude, phase, and position. This determines the gain and offset (in this case 53.4 μm). Then the data can be replotted as the measured position against antenna position. The deviations about the straight line are the system resolution, i.e., a combination of the antenna positioning resolution and the actual BPM resolution. Since the measured resolution, 230 nm, is near the precision of the micrometer, this number is an upper limit of the BPM resolution. This meets the requirement for Q-BPMs.

An interesting feature of this cavity is that it has response for the TM21 (quadrupole) and TM31 (sextupole) modes. The TM31 mode is not shown on the spectra (Figure 4) but is located at 19.35 GHz. Positions scans for these modes show the appropriate response but were not analyzed in detail.

After the delivery of the vacuum feedthroughs for the waveguides, two were clamped in place and the waveguides were then clamped together. VNA S21 measurements show a loss of only -1.7 dB at 11.424 GHz. The feedtrough for the phase cavity (which is a slightly different design) has just been received.

The next steps in testing this cavity BPM is to complete the assembly and repeat the measurements.

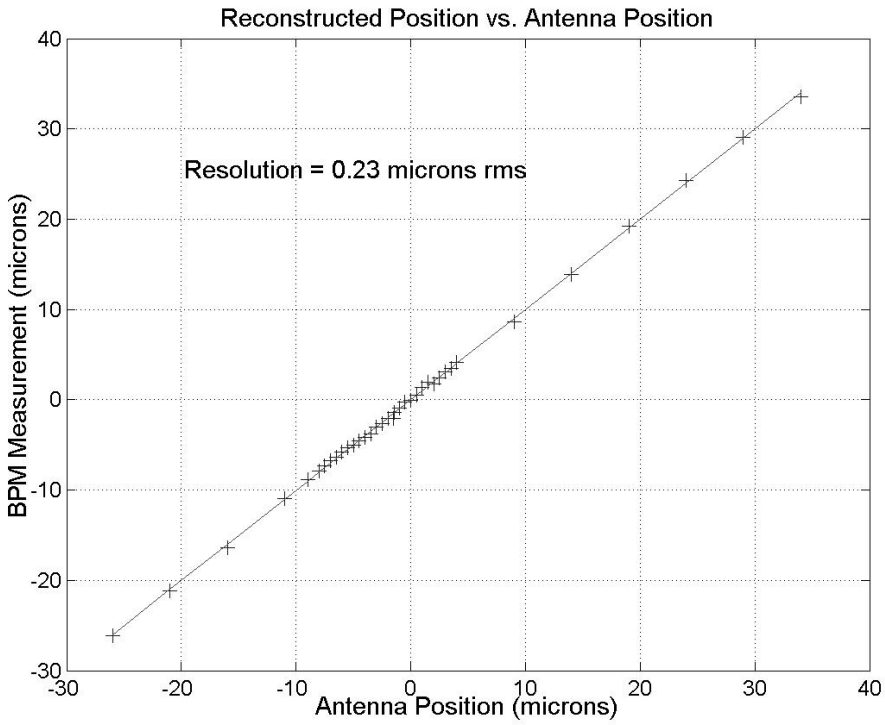

Figure 5. Measured position verses antenna position adjusted for offset and normalized for gain.

CONCLUSIONS

A research program to investigate cavity BPMs for application to the Q-BPMs for the NLC has been started. A prototype cavity BPM was designed and constructed to meet the requirements. The BPM designed for operation at 11.424 GHz has a xy cavity with a coupling scheme that suppresses the monopole mode and a phase cavity. Finished assembly of the device has not been completed, but a test fixture was made so that preliminary measurements could be made.

Results of the preliminary tests show good suppression of the monopole mode, so that it will not interfere with measurements of the dipole signal and little coupling between x and y. The most important conclusion is that an upper limit to the resolution is 230 nm which meets the requirement for the Q-BPMs.

Although the machining of this first cavity did not meet specifications, it is expected that fiducialization to the outside with respect to the cavity center can be done to an accuracy of a few microns. Since the cavity is machined from a single block it should have good mechanical stability.

Assembly of the BPM will be completed and these tests will be repeated. In the future, cavity BPMs of this type will be constructed and tested in an accelerator.

ACKNOWLEDGMENTS

The authors wish to thank Rusty Humphrey, Ray Larsen, and Marc Ross for their encouragement and support of this project.

REFERENCES

1. The NLC Design Group, T. Raubenheimer, ed., "Zeroth-Order Design Report for the Next Linear Collider," LBNL-PUB-5454, SLAC Report 474, UCRL-ID-124161, 1996.
2. The NLC Collaboration, Nan Phinney, ed., "2001 Report on the Next Linear Collider," FERMILAB-Conf-01/075-E, LBNL-PUB-47935, SLAC-R-571, UCRL-ID-144077.
3. T. Slaton, G. Mazaheri, and T. Shintake, "Development of Nanometer Resolution C-Band Radio Frequency Beam Position Monitors in the Final Focus Test Beam," *Proceedings of the XIX International Linac Conference*, Chicago, 1998, pp. 911-913.
3. V. Balakin, A. Bazhan, P. Lunev, N. Solyak, V. Vogel, P. Zogolev, "Experimental Results from a Microwave Cavity Beam Position Monitor," *Proceedings of the 1999 Particle Accelerator Conference*, New York, 1999, pp.461-464.