SLAC-PUB-95-7028
October, 1995

Lasers for Linear Colliders

Josef Frisch, Dian Yeremain

Stanford Linear Accelerator Center, Stanford University, Stanford, CA 940309

General information:

It is assumed that all DC gun designs will use polarized GaAs photocathodes, as this technology has been demonstrated to be reliable. A quantum efficiency of 0.1% at a wavelength of 850nm is assumed. RF guns will be assumed to use either polarized (GaAs) or unpolarized (Cs_2Te) photocathodes. Cs_2Te is assumed to have quantum efficiency of 5% at 260nm.

Although new laser materials are under development, at the present time the only material capable of high repetition rate (>50Hz) operation with wavelength tuning from 750nm-880nm (the range for various GaAs based polarized photocathodes) is Titanium doped sapphire (Ti:Sapphire). The material's fairly narrow absorption band, and the short excited state lifetime make pulsed laser pumping (typically with frequency doubled Nd:YAG) the most attractive pump source. The relevant parameters for Ti:Sapphire are:

Operating Wavelength	750nm-880nm (650nm-1100nm demonstrated)
Excited state lifetime	3.2μs
Pump band	400nm-600nm
Saturation fluence	$0.9 J/cm^2$

The laser outlines presented below are not detailed designs. They are only intended to show possible solutions. All have been roughly checked for efficiency and materials damage, but stability, transverse mode structure, and system lifetime analysis has not been done.

Submitted to Publications

Work supported by Department of Energy contract DE-AC03-76SF00515

NLC / JLC - DC gun:

The NLC and JLC have very similar source requirements. Specifications are given for the NLC.

Pulse length	126μs
Pulse repetition rate	180Hz
Bunches per pulse	90
Bunch spacing	1.4, 2.8, 5.6 nsec
Bunch intensity	$3.5X10^{10}e^{-}$
Bunch length (gun)	200 psec
Laser bunch energy to cathode	5μJ
Laser average power	90mW
Laser peak power	50KW

This system would use a frequency doubled YAG pumped Ti:Sapphire oscillator to provide the required pulse structure. A YAG pumped Ti:Sapphire amplifier would be used to provide the required output power.

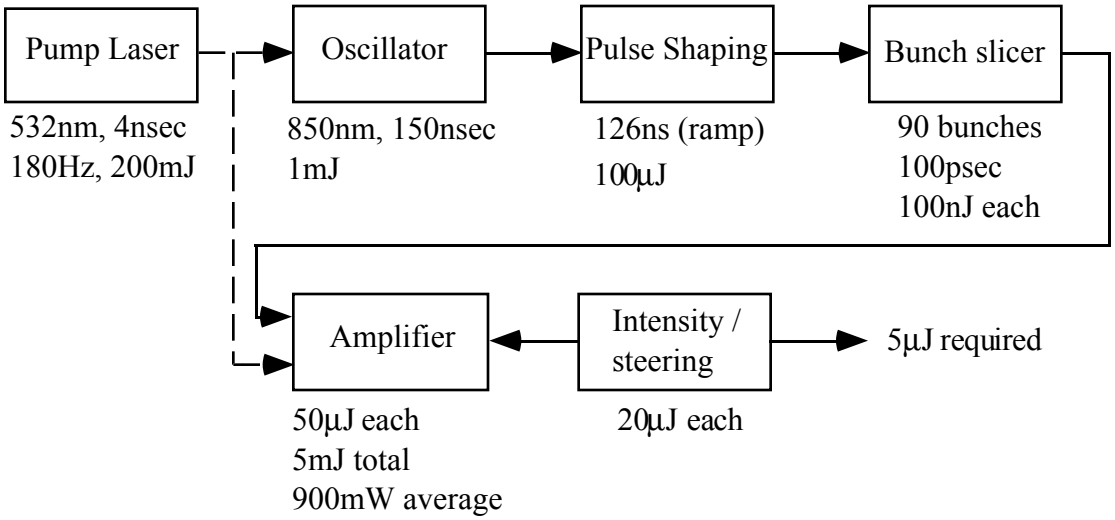

Pump laser: Probably a pair of commercial flashlamp-pumped, Q-switched, frequency doubled Nd:YAG lasers, each operating at 90Hz, interleaved to provide the required repetition rate.

Oscillator: A long (~2M) cavity, Q-switched Ti:Sapphire oscillator. The long cavity provides an output pulse which is long enough to allow slicing the required bunch shape.

Pulse Shaping: A Pockels cell, and a fast high voltage arbitrary waveform generator is used to shape the overall pulse train. This can be used to compensate for changes in the photocathode charge limit.

Bunch slicer: A series of resonantly driven, RF Pockels cells to slice the pulse into a train of bunches. Four cells would provide a 200psec FWHM pulse, with 714, 357, or 178.5MHz repetition rates.

Amplifier: A multi-pass Ti:Sapphire amplifier. The total required gain of 500 can probably be produced using 3 passes. The amplifier will be operated at an efficiency of about 5% to reduce the gain variation during the pulse.

Intensity / steering: A Pockels cell for intensity control, and set of remote actuated lenses for steering and spot size control. A similar system will be required on all of the collider laser system. This system would also include a Pockels cell and driver to switch optical polarization as required to obtain the desired electron polarization.

Overall: This laser can be built with conventional technology. There are no serious technical challenges. The system is complex, and will probably require considerable development time. Note: this system is designed to provide somewhat higher power than is required in order to allow the possible use of lower quantum efficiency cathodes.

<u>NLC / JLC - RF gun:</u>

An alternate source for the NLC / JLC is a RF gun. This would presumably only be used if it is shown to be possible to use polarized GaAs photocathodes in an RF gun. The required parameters would be:

Pulse length	126μs
Pulse repetition rate	180Hz
Bunches per pulse	90
Bunch spacing	1.4, 2.8, 5.6 nsec
Bunch intensity	$3.5X10^{10}e^{-}$
Bunch length (gun)	3 psec
Laser bunch energy to cathode	5μJ
Laser average power	90mW
Laser peak power	1.5MW

This system would use a mode-locked Ti:Sapphire oscillator and pulse splitter to provide the required pulse structure. The beam would be amplified in a YAG pumped Ti:Sapphire amplifier.

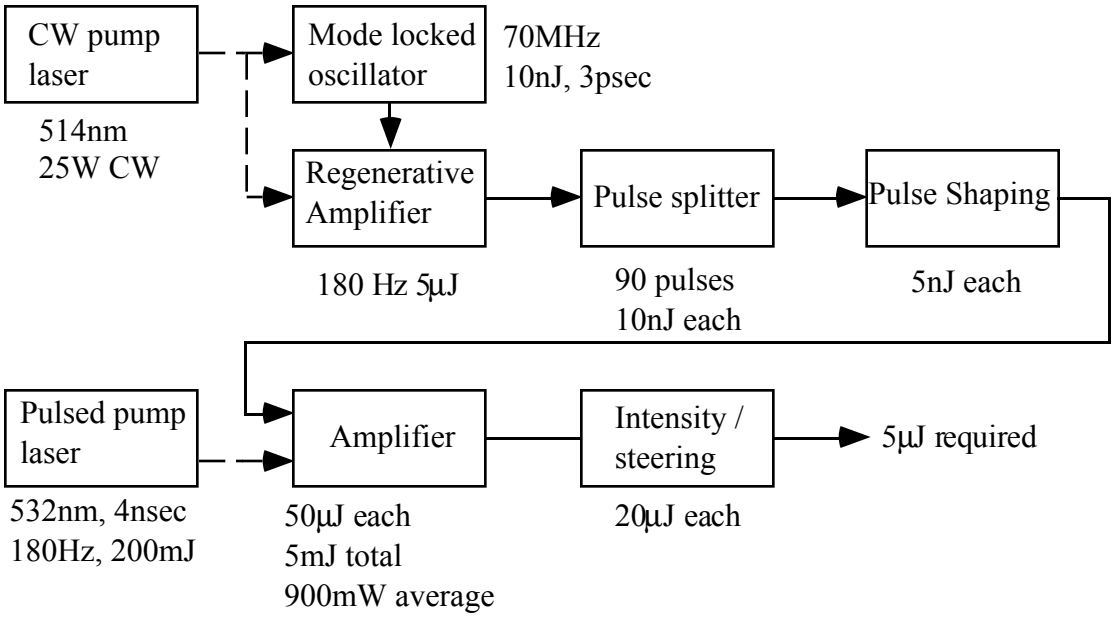

CW pump laser: A commercial large frame Ar^+ ion laser.

Mode locked oscillator: A commercial Ti:Sapphire oscillator, with external phase locking.

Regenerative amplifier: A commercial CW pumped Ti:Sapphire regenerative amplifier. The pump laser, oscillator, and regenerative amplifier are often sold together by a single manufacturer.

Pulse splitter: A binary ladder pulse splitter to generate a train of evenly spaced pulses. This type of ladder allows independent control to the intensity of each pulse.

Pulse shaping: Similar to the NLC / JLC DC gun system.

Pulsed pump laser: Similar to the NLC / JLC DC gun system.

Amplifier: A multi-pass, Ti:Sapphire amplifier. The required gain of 10,000 should be attainable in 5 passes. The peak optical power (20MW) is low enough to avoid the need for chirped pulse amplification.

Intensity control and steering: Similar to the NLC / JLC DC gun system.

Overall: This laser can be built with conventional technology. It is considerably more complex than the DC gun laser (due to the addition of the phase locked, mode locked oscillator) and will required considerable development time. This system is designed to produce more energy than is required to allow for the possible use of lower quantum

efficiency cathodes. Note that operation with a Cs_2Te unpolarized photocathode is possible by adding a frequency tripler after the amplifier.

S-band Linear Collider - DC gun:

The S-band linear collider requires a long (2μs) pulse train but otherwise has requirements similar to NLC.

Pulse length	2μs
Pulse repetition rate	50Hz
Bunches per pulse	125
Bunch spacing	8/16/24 nsec
Bunch intensity	$6X10^{10}e^-$
Bunch length (gun)	2.4nsec
Laser bunch energy to cathode	10μJ
Laser train energy to cathode	1.2mJ
Laser average power	60mW
Laser peak power	4KW

As the required train length is comparable to the excited state lifetime of Ti:Sapphire, it is not possible to use the scheme proposed for NLC. The proposal is to use direct flashlamp pumping of the Ti:Sapphire crystal. Flashlamp pumping of Ti:Sapphire has been used at SLAC as a polarized light source for fixed target experiments, although the SBLC will require substantially higher output powers. The resulting laser design is simple, but flashlamp pumping of Ti:Sapphire has not yet been demonstrated at the required power levels. A comparison of the SLAC flashlamp pumped Ti:Sapphire laser and the requirements for SBLC is given below.

Parameter	**SLAC**	**SBLC**
Pulse length	10μs	10μs
Repetition rate	120Hz	50Hz
Average power	5W	20W
Peak power	4KW	35KW
Bunch energy	NA	10μJ
Bunch duty factor	NA	15%
Transport efficiency	50%	75%
Pulse shaping efficiency	30%	30%
Bunch shaping efficiency	NA	50%
Power to cathode	600W	4KW

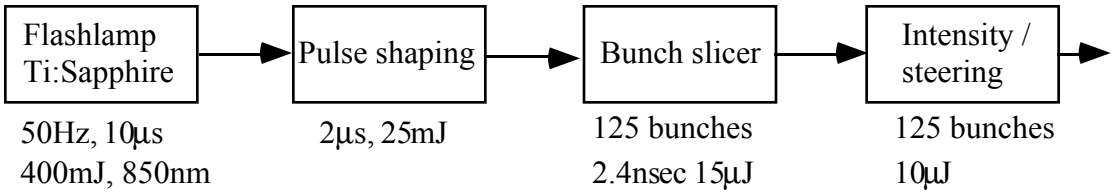

Flashlamp Ti:Sapphire: This is a short pulse (10µs) flashlamp driven Ti:Sapphire oscillator. This unit contains most of the complexity of the system. The average output power considerably exceeds the powers used for the SLAC source laser, although similar powers have been demonstrated in the laboratory. Component lifetimes, intensity stability, and transverse mode shape will all require considerable development.

Pulse Shaping: This unit is similar to the NLC / JLC DC gun system. The longer pulse may allow the use of feedback to control intensity fluctuations.

Bunch slicer: This unit is similar to the NLC / JLC DC gun system.

Intensity and steering control: This unit is similar to the NLC / JLC DC gun system.

Overall: Although the overall design of this system is simple, the flashlamp pumped Ti:Sapphire laser itself will require considerable development. This system will not be able to operate significantly in excess of the minimum required output power. Future developments in laser materials, particularly Cr:LISAF and Cr:LICAF may provide a more efficient solution.

<u>Superconducting L-Band Linac (TESLA) - DC gun version:</u>

TESLA requires a very long (800µs) train with a long bunch spacing. A DC gun would presumably only be used by TESLA if polarization were required and were not possible with an RF gun.

Pulse length	800µs
Pulse repetition rate	10Hz
Bunches per pulse	800
Bunch spacing	1 µsec
Bunch intensity	$5X10^{10}e^{-}$
Bunch length (gun)	2 nsec
Laser bunch energy to cathode	10µJ
Laser train energy to cathode	6mJ
Laser average power	60mW
Laser train average power	7.5W
Laser peak power	4KW

It should be possible to produce this pulse structure using an Argon ion pumped, Q-switched Ti:Sapphire laser. The output pulses can be chopped to the desired intensity, and then amplified in a Ar+ ion laser pumped Ti:Sapphire amplifier. The required Ar+ pump power is large, but obtainable by using several standard large frame ion lasers.

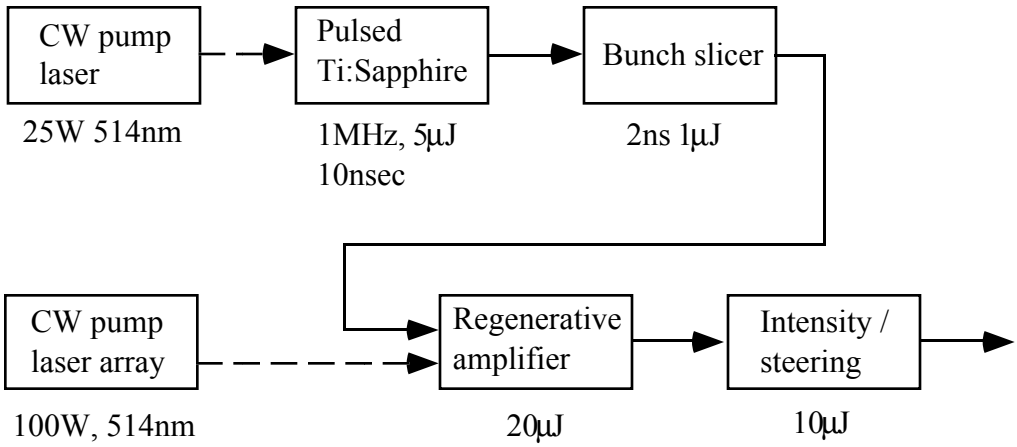

CW pump laser: A commercial 25W multiline Ar^+ ion laser.

Pulsed Ti:Sapphire: A repetitively Q-switched, CW pumped Ti:Sapphire oscillator. Unit may be available commercially.

Bunch slicer: Similar to the NLC / JLC system, used to produce a 2ns pulse.

CW pump laser array: An array of several commercial Ar^+ ion lasers providing a total of approximately 100W pump power. If the average power loading on the regenerative amplifier becomes a problem, the pump laser beam can be pulsed only during the duration of the accelerator pulse.

Regenerative amplifier: This is a regenerative Ti:Sapphire amplifier pumped by the CW lasers. The regenerative amplifier also pulse selects to provide the required 1 MHz bunch repetition rate.

Intensity / steering: Similar to the NLC / JLC system.

Overall: This laser is large, but of similar complexity to the other proposed source lasers. The only technologically difficult part of the system is the requirement for high repetition rate (MHz) high voltage(3KV) pulsers for the laser Q-switches and Pockels cells. Future developments in laser materials, and in particular in high average power diode-pumped lasers may greatly simplify this system.

<u>Superconducting L-band Linac (TESLA) - RF gun version:</u>

TESLA will probably operate with an RF gun. This system can be used with either GaAs or Cs_2Te cathodes:

Wavelength GaAs / Cs_2Te)	850nm / 266nm
Pulse length	800μs
Pulse repetition rate	10Hz
Bunches per pulse	800
Bunch spacing	1 μsec
Bunch intensity	$5X10^{10}e^-$
Bunch length (gun)	3 psec
Laser bunch energy to cathode (GaAs / Cs_2Te)	10 μJ / 1μJ
Laser train energy to cathode	6mJ / 600μJ
Laser average power	60mW / 6mW
Laser train average power	7.5W / 750mW
Laser peak power	3MW / 300KW

For polarized (GaAs) cathodes, the fundamental wavelength will be used. For Cs_2Te cathodes, the output can be frequency trippled. A mode-locked, Ar+ ion pumped, Ti:Sapphire oscillator is used as the pulse source. Amplification is similar to the TESLA DC gun system.

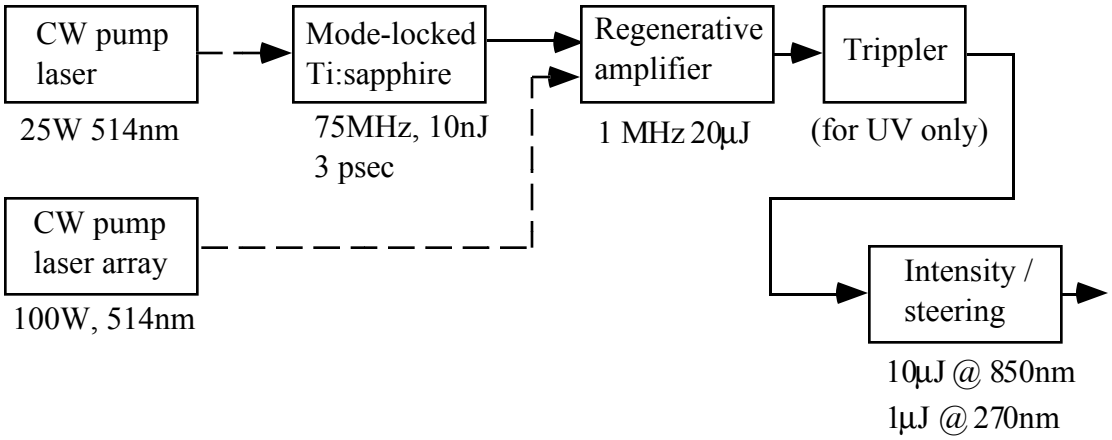

CW pump laser: Commercial Ar^+ ion laser.

Mode-locked Ti:Sapphire: Commercial picosecond mode locked Ti:Sapphire laser

CW pump laser array: Similar to the system for TESLA DC gun.

Regenerative amplifier: Similar to the system for TESLA - DC gun, except this system amplifies picosecond rather than nanosecond pulses.

Tripler: Provides 266nm light (assuming a 800nm fundamental) with about 10% efficiency.

Intensity / steering: Similar to NLC / JLC system.

Overall: This system is similar in complexity to the DC gun TESLA system, with the addition of the phase locking equipment for the mode locked oscillator.

CLIC Main beam:

The CLIC accelerator is designed to operate at high repetition rates with short bunches. The required pulse structure is:

Operating wavelength	266nm (for CsTe cathode)
Pulse length	7nsec (max)
Pulse repetition rate	1.2KHz
Bunches per pulse	1-10
Bunch spacing	667psec
Bunch intensity	$5.6X10^{10}e^-$ (For e^+ production) / $1.2X10^{10}e^-$ collision
Bunch length (gun)	3.3 psec
Laser bunch energy to cathode	600nJ
Laser train energy to cathode	6μJ (max)
Laser average power	7mW
Laser peak power	180KW

The pulse structure will be generated using a Ar+ ion pumped, mode-locked Ti:Sapphire oscillator. Amplification will be done with a CW pumped, Q-switched, frequency doubled Nd:YAG laser pumping a Ti:Sapphire regenerative amplifier. The output of the laser is frequency trippled to provide the required wavelength. This system is fairly stright-forward.

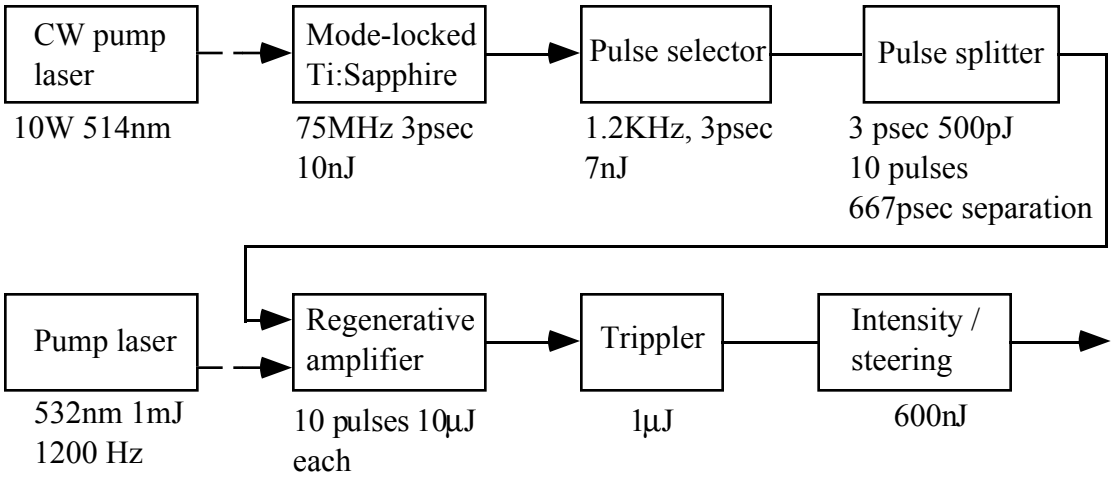

CW pump laser: Commercial Ar^+ ion laser.

Mode-locked Ti:Sapphire: Commercial CW pumped, picosecond mode locked laser.

Pulse selector: High voltage driver and Pockels cell combination to select single pulses at 1.2KHz from the 75MHz pulse train.

Pump laser: Commercial arc-lamp pumped, Q-switched, frequency doubled Nd:YAG or Nd:YLF laser.

Regenerative amplifier: Possibly commercial, Ti:Sapphire regenerative amplifier.

Tripler: Used if a UV photocathode (CsTe) is used in the gun. Otherwise system can operate at 850nm for polarized photocathodes.

Intensity / Steering: Similar to NLC / JLC system.

Overall: All of the components except the pulse splitter are available as (possibly slightly modified) commercial units. System complexity is typical for collider source lasers.

Operation with polarized cathodes: If GaAs photocathodes are shown to work in RF guns, this system could be used without the frequency trippler. The X10 increase in output power will roughly compensate for the change in quantum efficiencies (X50, X3 in wavelength).

<u>CLIC Drive beam:</u>

The CLIC drive beam is used to provide the 30GHz RF to accelerate the CLIC main beam. The drive source is expected to consist of 11 RF guns, operating interleaved to provide the following pulse structure:

Cathode	CsTe
Assumed quantum efficiency	5%
Operating wavelength	266nm
Pulse length	11.4nsec
Pulse repetition rate	1.2KHz
Trains per bunch	4
Train separation	2.86nsec
Bunches per train	22
Bunch spacing	33 psec
Bunch intensity	$1.5X10^{11}e^{-}$
Bunch length (gun)	2 psec
Laser bunch energy to cathode	0.5μJ
Laser train energy to cathode	10μJ
Laser pulse energy to cathode	40 μJ
Laser average power	50mW
Laser peak power	250KW

The difficulty of separating bunches with a 33psec spacing to the 11 guns requires the use of 11 separate amplifiers. As in the previous system, the pulse structure is generated by a Ar+ ion pumped, mode-locked Ti:Sapphire laser, and amplification is performed with CW pumped YAG pumped Ti:Sapphire amplifiers.

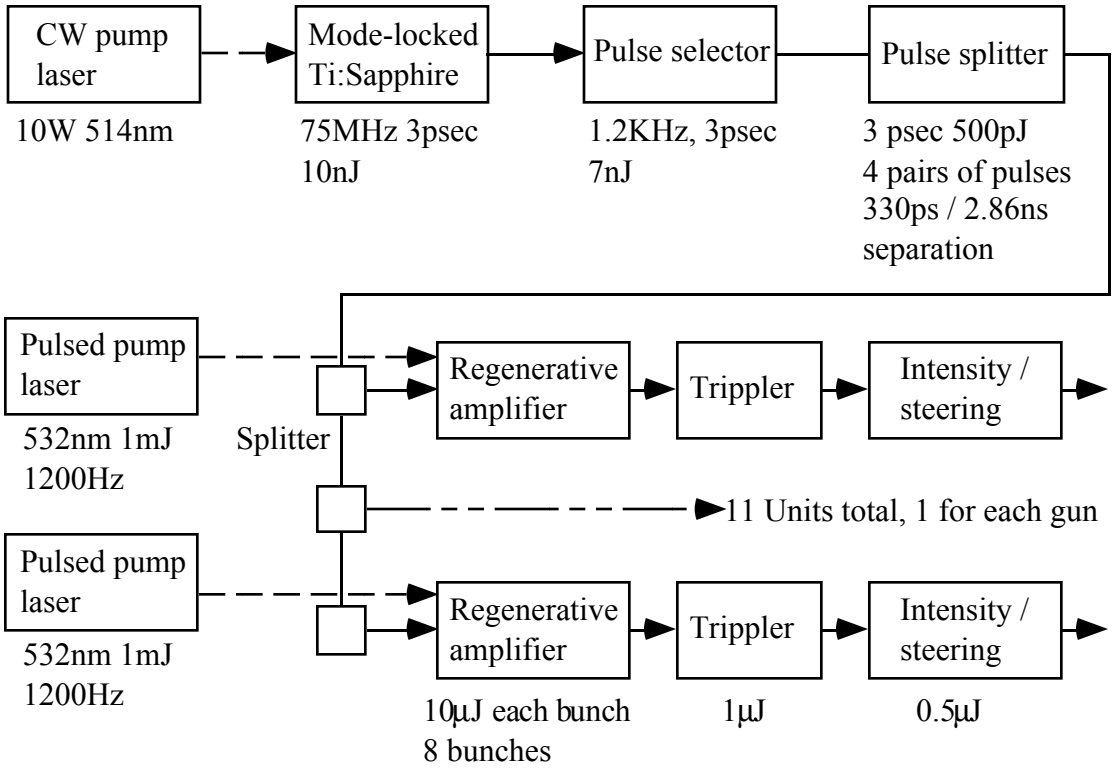

CW pump laser: Commercial Ar^+ ion laser.

Mode locked Ti:Sapphire: Commercial picosecond Ti:Sapphire laser

Pulse selector: High voltage driver and Pockels cell to select signal pulses at 1.2KHz out of the 75MHz pulse train.

Pulse splitter: A combination of splitters, combiners, and delay lines to produce a pulse structure consisting of 2 bunches spaced by 366.7psec, in 4 trains separated by 2.86nsec, at an overall pulse repetition rate of 1.2KHz. This is the required time structure from each of the RF guns.

Splitter: This is a partially reflective mirror which divides the mode-locked pulse among the different amplifiers.

Pulsed pump laser: A commercial arc-lamp pumped, Q-switched, frequency doubled Nd:YAG or Nd:YLF laser. May be replaced by a diode pumped YLF laser depending on the state of that technology at the time of construction. Note that 11 pump lasers are required, 1 for each amplifier.

Regenerative amplifier: This must be a long cavity amplifier to amplify the overall pulse train length of approximately 12nsec. Other than the cavity length, the parameters are

similar to commercial units. Note that 11 regenerative amplifiers are required, 1 for each electron gun.

Tripler: Conventional frequency tripler to produce the 266nm light required for the photocathode.

Intensity / Steering: Similar to the NLC / JLC system. Note that 11 such systems are required to image the beam onto the 11 RF guns.

Overall: The requirement for 11 separate output beams for the 11 RF guns makes this system very large and complex. The individual components, however, are fairly straightforward.

General comments on lasers for linear colliders:

With the possible exception of the Flashlamp pumped Ti:Sapphire system for the SBLC, none of the lasers described here require components which are pushing the current state of the art. The specific, and sometimes complex pulse timing requirements, however, result in overall systems which are fairly complex. These designs also do not address the issues of intensity stability and transverse mode structure. Most linear collider guns require stability on the order of 1% RMS, and clean Gaussian or "top hat" transverse profiles. These should be possible with the designs given, however these requirements may add significant complexity.

An additional issue is the required reliability of the laser system. A linear collider laser should operate with >>99% of scheduled uptime. Some simple commercial lasers can meet this requirement, but it is difficult for complex lasers. The SLAC source lasers (which are somewhat less complex than most of the designs here) have met this goal, but only after considerable development time. It may be desirable to have 2 independent source laser systems in order to provide the required system uptime.

It is difficult to estimate the cost and development time required for these systems without a detailed design. A rough guess would be that these systems will all have hardware costs within a factor of 2 of a million dollars (US), and require three to five years of development time.

Future developments in laser technology may have some impact on these systems. In particular, the pump lasers may be replaced by diode-pumped solid state lasers, resulting in a significant reduction in system size, and possibly cost. At the present time, however, commercial diode pumped systems are more expensive than conventional lasers. New laser materials could also simplify the laser designs. At the present time, however, there are no promising alternatives to Ti:Sapphire for high repetition rate, tunable or short pulse operation.

The source laser probably represents a fairly minor technological challenge, relative to the rest of a linear collider. However, system designers should expect a significant development time.