SLAC PUB 6664
September 1994
(A)

Conceptual Designs for NLC Ubitrons with Permanent-Magnet Wigglers*

Robert Phillips

Stanford Linear Accelerator Center, Stanford University, Stanford, CA 94309

INTRODUCTION

This paper describes three embodiments of the ubitron (FEL) amplifier that will be analyzed for possible use on the NLC. The design frequency and power are 11.424 GHz and 200 MW peak rf output power. The baseline against which these conceptual designs are to be evaluated is the PPM-focused 50-MW SLAC klystron, which in simulation shows 65% efficiency. (See paper in this conference by Ken Eppley.) In order to remain competitive in cost and power consumption, only ubitron beam-wave configurations that can use permanent-magnet wigglers are considered.

The plan for the NLCTA at SLAC is to use pulse compression to increase the 50-MW output from a klystron to 200-MW peak rf power with approximately 250-ns pulse length. If one had a 200-MW rf generator instead, how could it best be utilized? The 200-MW source could be substituted for the 50-MW klystron in one of two ways:

1. Eliminate the pulse compressor at some savings in both cost and system efficiency, but with no savings in the number of generators required for the accelerator.
2. Retain the pulse compressors but reduce the number of generators by a factor of four.

Eliminating the pulse compressors allows one to accept a lower efficiency from the 200-MW generator without degrading the overall efficiency of the system, due to the elimination of the power loss in the pulse compressor.

This is not, however, a pure gain. The 250-ns pulse would presumably retain the rise and fall time of the longer 1.5 μs pulses used with the 50-MW klystron, with the result that this wasted energy represents a higher percentage of the total energy in the pulse. To overcome this shortcoming implies the use of a gridded or mod anode gun which greatly complicates beam formation.

Retaining the pulse compressors implies either the development of an 800-MW pulse compressor (four-to-one compression with 200-MW input) or the use of two or four outputs from the generator with a corresponding number of pulse compressors per tube. In this case, the remaining savings is that associated with the reduction in the number of generators required, a reduction which might indeed be significant.

* Work supported by Department of Energy contract DE–AC03–76SF00515.

Invited talk presented at the Pulsed RF Sources for Linear Collider, Montauk, NY, October 2–7, 1994

To be competitive in overall power consumption, the 200-MW generator has to fall somewhere between 50% efficiency and the 65% now being achieved in simulation with the PPM-focused klystron.

CYLINDRICAL GEOMETRY WITH HOLLOW BEAM

Figure 1 is a cartoon of the last ubitron built in 1963. This tube used a hollow beam from a magnetron injection gun that was focused by a solenoidal guide field. The iron rings in the wall of the TE_{01} circular waveguide provide a superposed wiggler field. The tube operated at 70 kV, 54-GHz frequency and 154 KW of peak output power at 6% efficiency. The efficiency was not indicative of what might be obtained inasmuch as the beam wiggle (transverse to axial velocity) was only about 2%.

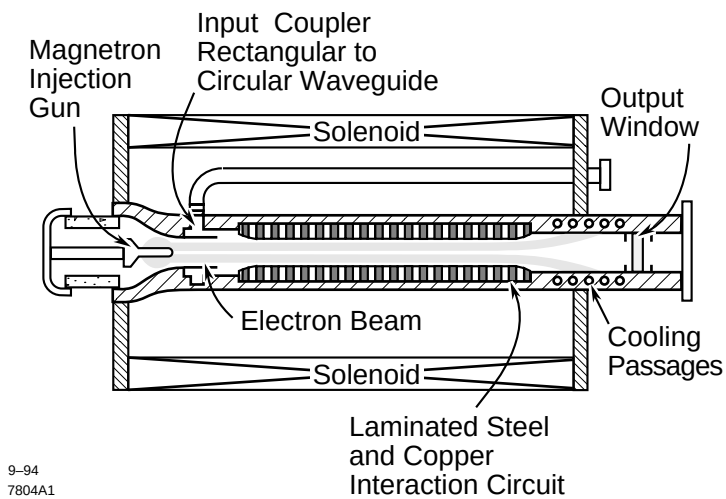

In the form shown here, this ubitron requires the use of a solenoid, therefore it does not meet our criteria.

I will now consider two variations that retain the cylindrical geometry and the hollow beam, but do not require the use of a solenoid.

HOLLOW BEAM UBITRONS WITH PERMANENT MAGNET WIGGLERS

Inside/Outside Magnetic Circuit

Figure 2 shows a hollow-beam ubitron and coaxial waveguide operating in the TE_{01} coax mode. This version requires a periodic array of magnets, both outside the outer conductor, and inside the center conductor, which both wiggle and focus the hollow beam.

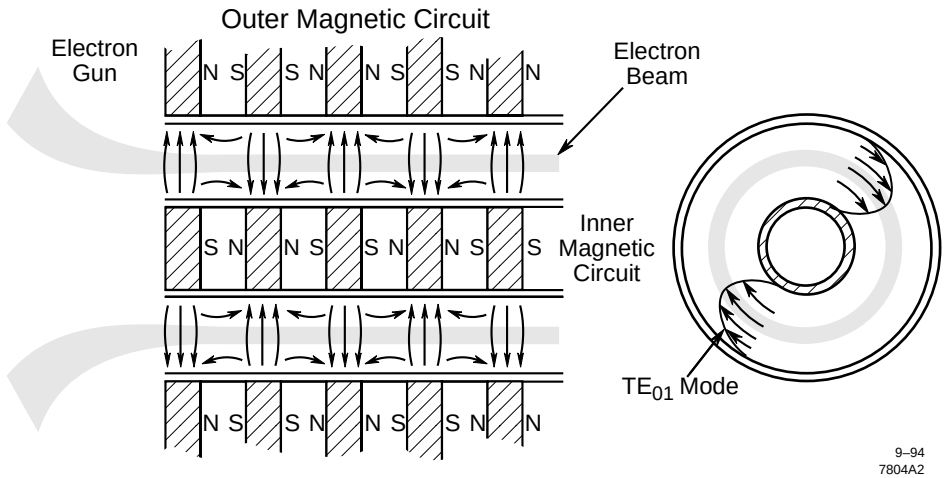

This type of focusing was first described in 1957 by Peter Sturrock of Stanford University. The requirement that a periodic magnetic circuit be included in the center conductor introduces a number of complications, including the need to cool the permanent magnets and a means for supporting the center conductor. I will move on directly to a variation that eliminates the internal magnetic circuit.

HOLLOW BEAM UBITRON WITH IRON-CENTER CONDUCTOR

Figure 3 shows a magnetic circuit which will also focus a hollow beam and does not require a periodic array of magnets inside the center conductor. Instead it takes advantage of the distortion in the periodic field that is introduced by a high-permeability center conductor to achieve a similar result. A hollow beam acted on solely by the outer periodic field, i.e., no center conductor, will collapse because the innermost electron sees a net inward-focusing force with no balancing outward-space charge force.

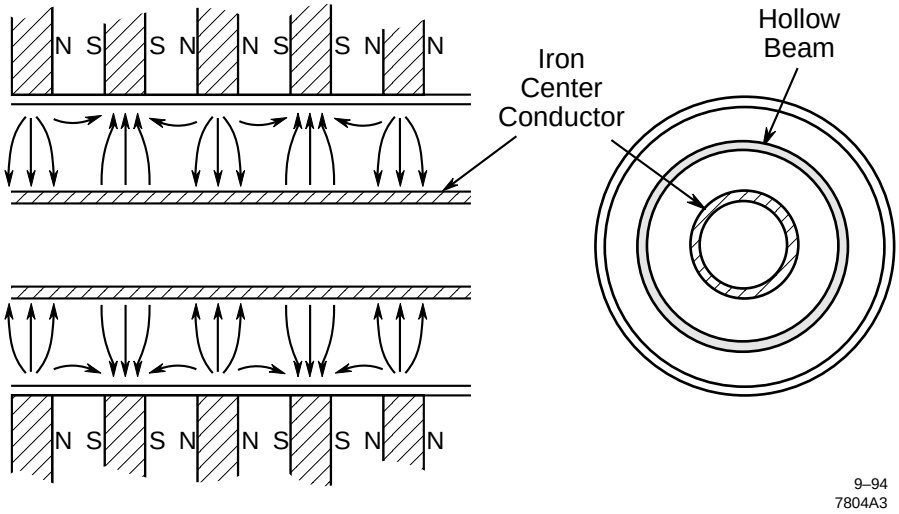

The presence of the iron-center conductor alters the force balance. Because the field lines enter the center conductor perpendicular to the axis, the innermost electron in the beam sees enhanced radial field, increasing the outward centrifugal force, at the same time that it sees a reduced axial focusing field. The net result is that the centrifugal force and focusing force can be made to cancel. This focusing scheme has not been analyzed for beam stiffness. The geometry retains the disadvantage that the center conductor needs to be supported.

SHEET BEAM

Figure 4 is a cartoon of a sheet-beam ubitron that uses permanent magnets to wiggle and focus the beam. Again, the interaction mode is TE_{01} where the "b" dimension of the guide is much larger than the "a" dimension. This is not a new concept. I proposed this sheet-beam geometry in 1960. The wedge-shaped magnetic field that provides beam confinement in the "x" direction is not mine. I have seen it described in the FEL literature, but I retained no references. It appears to be a simpler and more elegant way of confining the beam than the parabolic variation of the wiggler field that I used in my early ubitrons.

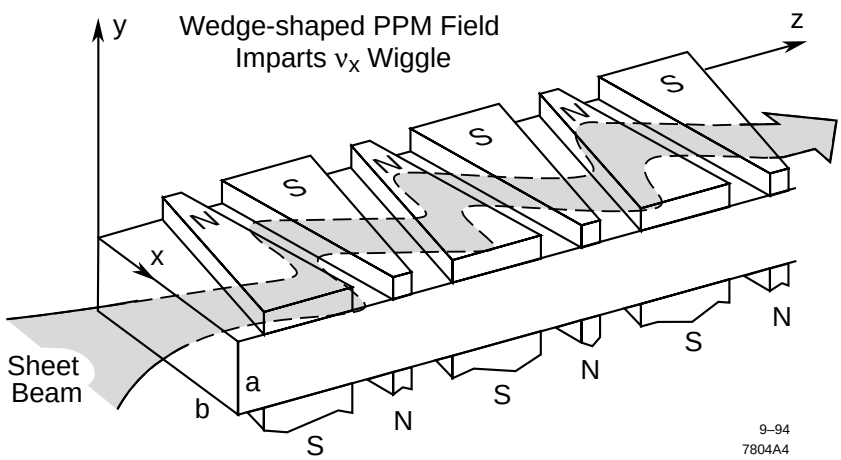

Table 1 shows the design and operating parameters for a wide range of values of voltage, current, perveance, guide width, guide height, and wiggler field. In each case the parameters are chosen to provide synchronism between the wiggled beam and the amplified TE_{01} mode. Included in the table are the computed values of guide cut-off frequency, wiggle factor (transverse to total-beam velocity ratio), the Pierce guide impedance and an equivalent Pierce gain parameter that is an approximate measure of traveling-wave gain per wavelength as well as achievable traveling-wave efficiency. These embodiments all have in common a beam power of about 400 MW, which implies the need for 50% efficiency for 200 MW rf output power. The wiggle factor of close to 50% bodes well for achievable efficiency.

TABLE 1. Example of Possible Geometries for Sheet-Beam Ubitron

No.	Guide Width a (cm)	Guide Height b (cm)	Magnet Period (cm)	Voltage KV	Microperv	Peak B_y K Gauss	Wiggle Factor	Interaction Impedance K (ohms)	Gain Parameter C
1	1.52	2.29	3.67	550	1.78	1.42	.500	50.0	0.101
2	2.29	2.54	6.0	550	1.78	1.0	.564	17.7	0.078
3	1.52	5.08	3.53	440	3.11	1.3	.464	21.2	0.084
4	1.52	10.16	3.38	440	3.11	1.6	.534	10.15	0.072
5	1.90	10.16	4.23	350	5.52	1.2	.532	5.19	0.067
6	1.40	5.08	2.65	350	5.52	1.8	.505	30.56	0.117
7	1.52	10.16	2.90	276	10.0	1.54	.507	8.41	0.089

Potential Advantages

One might ask, why devote the effort to a ubitron/FEL, why not a sheet-beam klystron? There are at least two advantages of the ubitron interaction over those of the sheet-beam klystron:

1. Mode discrimination is more straight forward
2. Surface gradients which cause guide breakdown are less of a problem.

The only mode that can propagate at the design frequency in the guides of Table I with no axial component of current in the broad walls is TE_{01}. The first competing mode having no axial component of current, TE_{02} is substantially higher in frequency and has zero field where the beam is located. Strips of lossy ceramic embedded in the walls transverse to the direction of the beam travel can be used to greatly attenuate unwanted modes while leaving the TE_{01} mode unaffected.

The TE_{01} mode in cylindrical geometry has no field terminating on a metal wall. The advantage of this in terms of breakdown has been made obvious to us at SLAC in converting our 50-MW klystron from TE_{11} pillbox windows to TE_{01} circular guide windows. Using identical ceramic discs in the two cases, we have seen breakdown in the TE_{11} mode window at a peak power as low as 25 MW, while successfully operating TE_{01} mode windows in the resonant ring at more than 80 MW of peak power.

For any of the three ubitron embodiments described here to be competitive with a PPM-focused klystron, we need to demonstrate at least 50% efficiency in simulation. There is reason for hope on this score. The work done at LLNL by Sessler et al. demonstrated an FEL with a tapered phase velocity that produced a measured efficiency approaching 40% at about 35-GHz operating frequency.
To carry out the evaluation of the ubitron as a 200-MW source, we plan to obtain a graduate student from the ATRI program to undertake the study. ATRI, a graduate engineering program that stresses microwave generation, is an Air Force sponsored collaboration including the Universities of California at Davis and Berkeley, plus SLAC. The program is directed by Professor Neville Luhmann. As a minimum, the project will include simulation of a traveling-wave amplifier, first without a velocity taper, then with a taper for maximum traveling-wave efficiency.

A second part of the study will be the design of an extended-interaction klystron amplifier (TE_{01} cavities with attenuated drift regions between). We may find that the best combination is a hybrid similar to that of XL3, which is a 50-MW, PPM-focused klystron in which cavities bunch the beam for maximum rf current, and a traveling-wave output section provides efficient energy extraction with reduced surface gradient.