SLAC–PUB–5710
December 1991
N

Long Baseline Neutrino Experiments with the Fermilab Main Injector*

J. D. BJORKEN

Stanford Linear Accelerator Center

Stanford University, Stanford, California 94309

Talk given at the

Workshop on Long-Baseline Neutrino Oscillations

Fermilab, Batavia, Illinois

17–20 November 1991

* Work supported by the Department of Energy, contract DE–AC03–76SF00515.

1. Prologue: History and a Disclaimer.

The first question to be addressed in this talk is why am I doing this. I have not been, am not, and do not expect to be active in the field of neutrino-oscillation physics. The only direct involvement I have had is a talk [1] I gave at a somewhat similar workshop here in 1988, dealing with the future of the Fermilab neutrino program. At that time there appeared to be no discussion on the subject-matter of this workshop provided by anyone else, something I considered a serious error of omission. So I chose to try to fill the vacuum, and the method was to offer up a simple, easily analyzable example of what might be doable and what information might be gained. It is a very fun, seductive topic, and so I joined the legions of predecessors who acquired every topographic map stretching from Fermilab northeast to the lake, and scouted all important geographic features of well known locales such as West Chicago and Carol Stream. I ended up with a very simple and primitive suggestion, summarized as follows: use the Tevatron neutrino beam, go far away (800 km or so), and look for ν_μ disappearance via measurement of muons emergent at the surface. A comparison experiment would no doubt be needed at a short baseline as well. The proposed detector (Fig. 1) consisted of planes of Iarocci tubes mounted within semi-trailer trucks, configured so as to form a big hodoscope of fiducial area of 200-250 square meters (I envisaged a 30-truck detector.) Addition of solid-iron magnets for momentum analysis was also thinkable. The cost of the detector was scaled from proposals extant at BNL; this gave about $3M. The area captured (Fig. 2) by such an experiment in the $\delta m^2 - \sin^2 2\theta$ plane was about one square order of magnitude, which for me is the basic unit which justifies a significant experimental effort.

This idea was received with complete and overwhelming indifference. In fact,

it is not a very good idea, although I am loath to abandon it altogether, especially given its simple and romantic character. But by doing that exercise I did a little learning (I think), and so it is this process which I share here with you in this talk–what else can I do?

The key fact which was impressed on me was that while large L/E is the figure of merit in long-baseline experimentation, this not only means large L but also small E. There is a very large payoff in the ability to sense events with small E, and this mitigates the simplicity of looking for the energetic muons, despite the large target tonnage which goes with that. Better is a detector where the target volume is fully active. Nevertheless large detector tonnage remains, evidently, very important. And at this point, education by Professor M. Koshiba was important to me personally. He was at the workshop, and was at that time proposing a megaton water Cerenkov detector LENA. The arguments for his program, which still seem to me to be powerful general arguments, include the following:

1. The best primary proton energy for making the neutrinos is low, not high, because the intensity of the lower energy sources overcompensates for the higher cross sections, etc. at high energies. If one wants to try for evidence of ν_τ appearance, then the primary energy is determined by the tau production threshold. The choice of Main Injector is well matched for this option.
2. A one-megaton water Cerenkov detector is thinkable-and perhaps affordable.
3. This tonnage is big enough to contain even most muons of interest.
4. The energy threshold is low; after all these things do well in excluding various specific proton-decay modes.
5. With enough phototubes and a large mixing angle, it is even thinkable (to Koshiba at least) that one may distinguish a ν_τ event class from backgrounds.

2. The Case for a Bottoms-up Approach.

There are three basic classes of options for future experiments which can be considered. "Quick-and-dirty" experiments may use existing beams and relatively inexpensive apparatus, with the intent of answering a burning question in a timely, cost-effective way. Another class, which is very well represented in this meeting, is to build a new beam to aim at an existing, or soon-to-exist, detector off-site. The last class is to start from scratch and consider a new beam aimed at a new detector.

I will bias the rest of the discussion to this latter, bottoms-up class. The reasoning is that any really long-baseline experiment is from geometry alone going to require a new neutrino beam. And this beam is expensive, with a cost [2] between \$20M and \$30M. And since there is no such thing as a small experiment nowadays, especially in time-span for the participants, it makes sense to me to require doing the job, if at all, in as uncompromised a way as possible. I hasten to add that I have nothing against the first class of experiments, but suspect that they do not in any case address the problem in generality. Even if such local experiments are done, it will not eliminate the desire to go beyond. And there is no need for me to deal with the second class of options, since they will or should be documented very well by their proponents.

Basic for me in a bottoms-up approach is the need to take the strategic view. The data will arrive only five to ten years from now, at which time the perspectives on what to measure will most likely be very different from now. Most of the trendy issues present now will have disappeared or have been supplanted with new questions. I take as the figure of merit the incremental area in the $\delta m^2 - \sin^2 2\theta$ planes; the more the better, irrespective of what mixing process is considered

and what region is explored. While hints from theory should of course not be disregarded, too little is understood to base laboratory strategy on them. What does matter is that the experiments be sound, and of sufficient scope that definitive results can emerge. To me this implies that if the neutrino beam is aimed at an existing detector site, then there should be evidence that upgrade capability is possible.

3. Physics Issues and Detector Specifications

I suppose physics is what I should really be talking about, but I don't have anything much to say not better said by others. In looking at the classes of oscillations one might entertain, I found seven categories, the three flavor changing modes, the three disappearance modes, and the $\nu_\mu - \overline{\nu}_\mu$ mode. (I ignore the other neutrino-antineutrino mixings as either irrelevant or, for flavor-change, essentially redundant.) Of these, all but two are well-represented in this workshop. However, perhaps one might entertain the possibility of ν_τ disappearance (or instability?). A beam-dump ν_τ discovery experiment is probably called for to check this out. Long-baseline work is probably irrelevant to this issue, unless the mixing is three-way. The other somewhat neglected mode is the $\nu_\mu - \overline{\nu}_\mu$ mixing, calling for a clean beam and/or momentum analysis of the neutrinoproduced muon.

In general, experimental methods include [3] search for an anomaly in the distance or energy dependence of the charged-current rate. Probably less systematics-limited is the measurement of the neutral-current/charged-current ratio versus distance and/or energy. The muon momentum spectrum and charge ratio versus distance or energy is well suited for investigating $\nu_\mu - \overline{\nu}_\mu$ oscillations. And direct

evidence of the appearance of e's, τ's, or wrong-sign muons is an especially strong probe.

With these goals follow the general specifications for the detectors:

1. Muon detection via penetration (to separate neutral from charged currents), and measurement of momentum via range or perhaps magnetic analysis.
2. Calorimetry, especially for the muonless final states, should ideally have a low energy threshold and decent shower containment and resolution.
3. Electron/photon detection is especially valuable in trying to pick up the appearance of ν_e or ν_τ induced events. Backgrounds from π^0 decays make this tough.
4. Pattern-recognition capability becomes especially valuable as the energy threshold is pushed down, and distinct event topologies carry power as signatures.
5. Statistical power is important to provide a definitive answer. I think this means a surfeit of events relative to what is needed on paper, in order to account for subdivisions of data, needed to check the systematics, to also have good statistical accuracy.
6. Quality is the bottom line. There is a big premium on the accuracy of the measurements. High precision is in principle a good way to grab extra orders of magnitude in the $\delta m^2 - \sin^2 2\theta$ plane. This has been emphasized by Bernstein and Parke [4], as shown in Fig. 3.

4. Epilogue and Concluding Remarks

After hearing the discussions at this workshop, I still have essentially the same opinions I had upon arrival. These are to be sure superficial, along with most everything else I have said, and may prove only that I am getting pretty old. My reference detector remains a large water Cerenkov detector in the 100 kiloton to 1 megaton scale, perhaps backed up with a big muon multi-truck spectrometer. I like very much Bernstein's suggestion [5] to send the neutrino beam to Brookhaven. If a large volume of water could be provided on that site, there would be, in addition to the advantages of readily available infrastructure, the AGS and RHIC beam-dump neutrinos to calibrate the detector, reducing the dependence on a different short-baseline detector at or near Fermilab.

However, it seems to me that alternatives to water, such as a scaled up sampling calorimeter, suffer not only from less tonnage, but also from cosmic-ray backgrounds. As discussed in the workshop, these background rates, even after taking into account the low duty factor, are large. The best defense would seem to be a fully active detector with as good time-resolution as possible. There is, as mentioned repeatedly, a high premium on seeing well the neutral-current events of as low an energy as possible, something cosmic rays happily simulate. The large-volume water detector seems well-suited to dealing with this problem. I was disappointed that there was so little discussion of this option. I hope it may receive more attention in the future.

It is a difficult thing to base a laboratory program as expensive as this kind of thing on a fishing expedition, even given that there are astrophysics spinoffs and possibly local BNL neutrino physics which might exploit this enormous detector tonnage. But it has been done before, in particular at Brookhaven itself. The rare

K-decay program is mostly fishing. And even with the present absence of discovery physics there, I think most everyone will agree that it has been very justifiable. In my opinion, the search for neutrino oscillations has at least as much justifiability, with if anything a bigger chance of a discovery. But in order to catch the fish, it may be necessary to build a lake.

Acknowledgments

I thank Bob Bernstein and Maury Goodman for organizing such a pleasurable workshop, and them as well as Drasko Jovanovic for most enlightening discussions.

REFERENCES

[1] J. Bjorken, "New Directions in Neutrino Physics at Fermilab," September 1988 (Fermilab), p. 259.

[2] "Conceptual Design Report: Main Injector Neutrino Program," Version 1.1 (Fermilab, 1991), p. 160.

[3] M. Shaevitz, Ref. 1, p. 123.

[4] R. Bernstein and S. Parke, Phys. Rev. D44, 2069 (1991).

[5] R. Bernstein, these proceedings.

FIGURE CAPTIONS

1) A possible layout of the 1988 suggested experiment.

2) A guess of the sensitivity in $\delta m^2 - \sin^2 2\theta$ space for the suggested 1988 experiment.

3) Effect of experimental accuracy on the exclusion region. The parameter ϵ is the precision to which the mixing probability is experimentally determined. From Bernstein and Parke, Ref. 4.

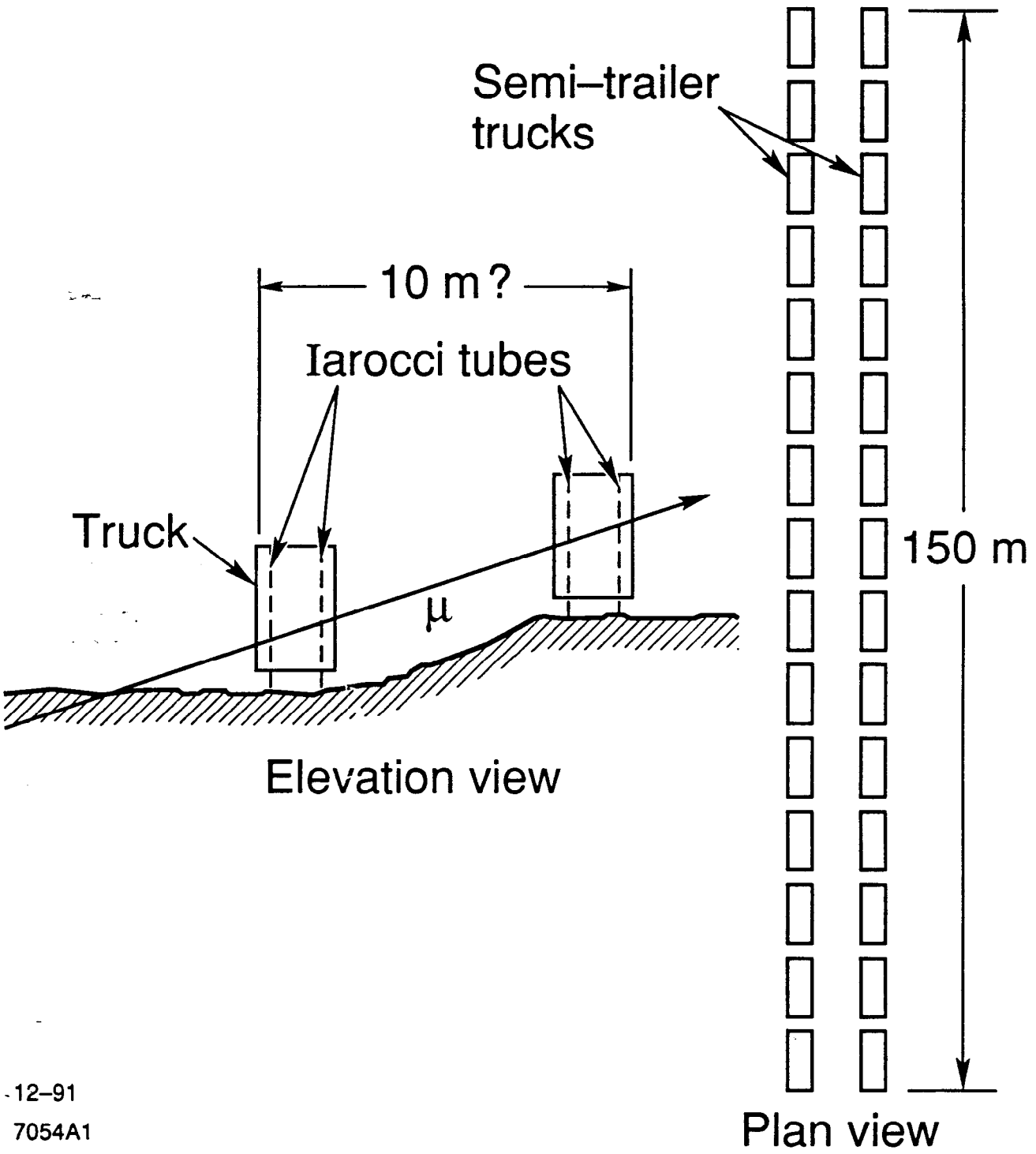
Semi–trailer
trucks
10 m ?
Iarocci tubes
Truck
μ
Elevation view
150 m
Plan view
12–91
7054A1

Figure 1

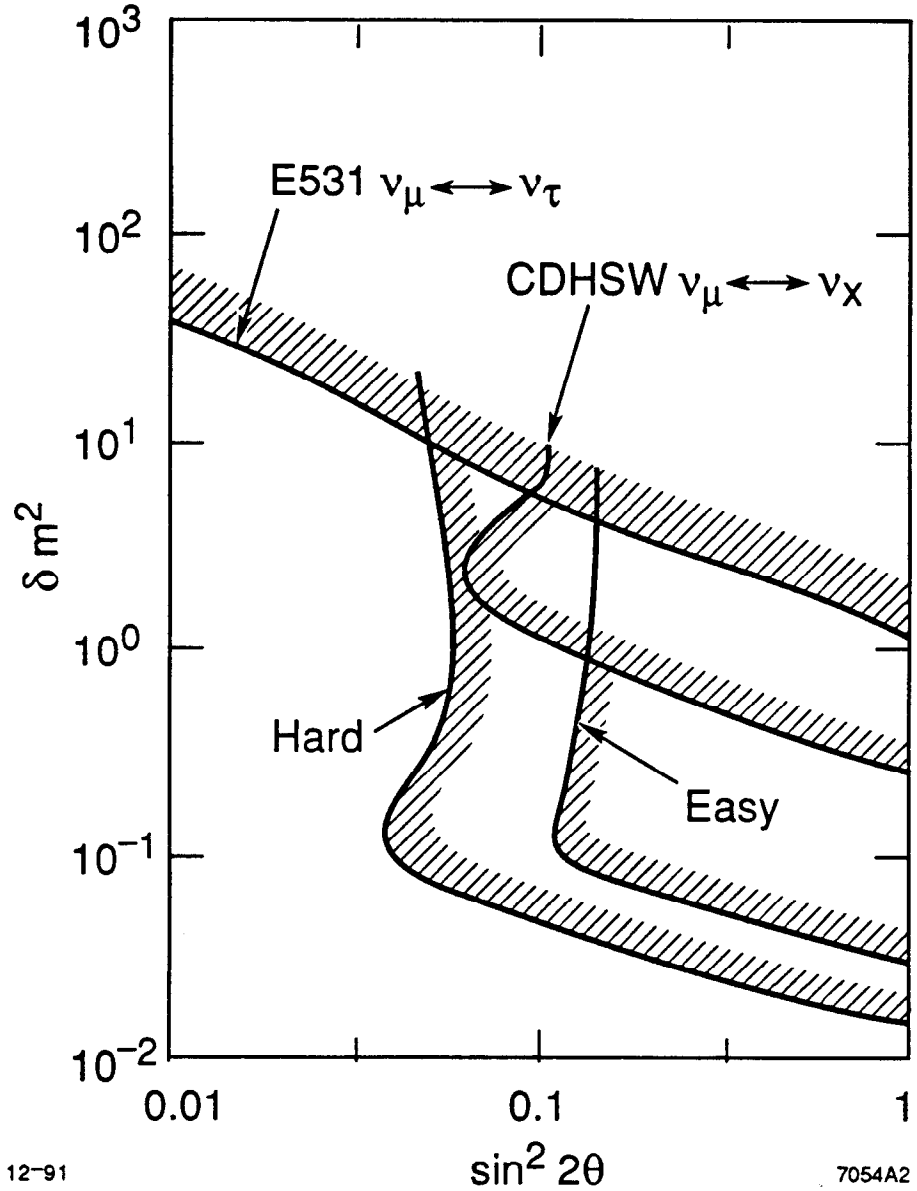
10^3
10^2
10^1
10^0
10^{-1}
10^{-2}
δm^2
E531 $\nu_\mu \longleftrightarrow \nu_\tau$
CDHSW $\nu_\mu \longleftrightarrow \nu_X$
Hard
Easy
0.01
0.1
1
$\sin^2 2\theta$
12-91
7054A2

Figure 2

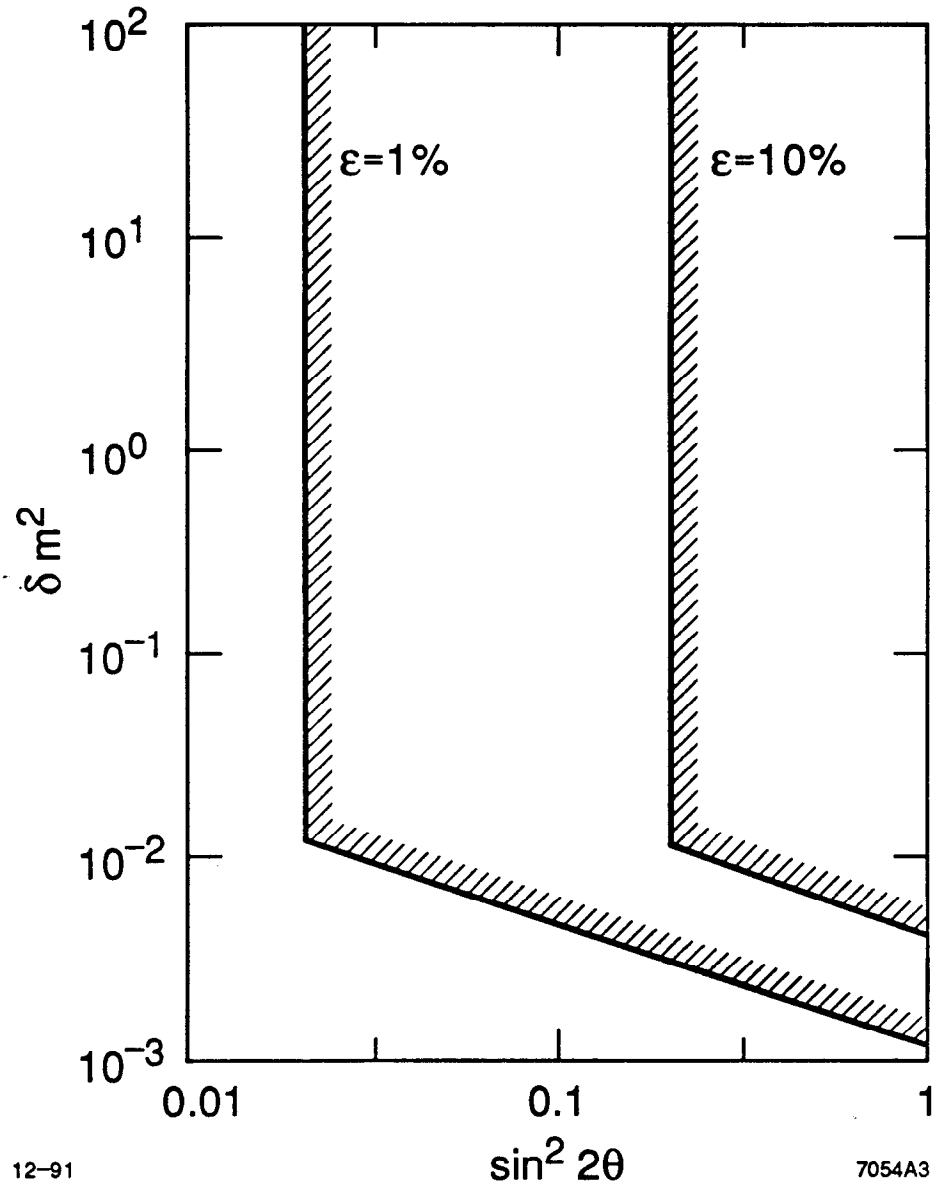
10^2
10^1
10^0
10^{-1}
10^{-2}
10^{-3}
δm^2
ε=1%
ε=10%
0.01
0.1
1
$\sin^2 2\theta$
12–91
7054A3

Figure 3