SLAC-PUB-15154

A SUPERCONDUCTING MAGNET UPGRADE OF THE ATF2 FINAL FOCUS*

B. Parker#, M. Anerella, J. Escallier, P. He, A. Jain, A. Marone, P. Wanderer, KC. Wu (BNL), C. Hauviller, E. Marin, R. Tomas, F. Zimmermann (CERN), B. Bolzon, A. Jeremie (IN2P3-LAPP), N. Kimura, K. Kubo, T. Kume, S. Kuroda, T. Okugi, T. Tauchi, N. Terunuma, T. Tomaru, K. Tsuchiya, J. Urakawa, A. Yamamoto (KEK), P. Bambade (LAL), P. Coe, D. Urner (OXFORD), A. Seryi, C. Spencer, G. White (SLAC)

Abstract

The ATF2 facility at KEK is a proving ground for linear collider technology with a well instrumented extracted beam line and Final Focus (FF). The primary ATF2 goal is to demonstrate the extreme beam demagnification and spot stability needed for a linear collider FF [1]. But the ATF2 FF uses water cooled magnets and the ILC baseline has a superconducting (SC) FF [2]. We plan to upgrade ATF2 and replace some of the warm FF magnets with SC FF magnets. The ATF2 SC magnets, like the ILC FF, will made via direct wind construction [3]. ATF2 coil winding is in progress at BNL and warm magnetic measurements indicate we have achieved good field quality. Studies indicate that having ATF2 FF magnets with larger aperture and better field quality should allow reducing the ATF2 FF beta function for study of focusing regimes relevant to CLIC [4]. The ATF2 magnet cryostat will have laser view ports for directly monitoring cold mass movement. We plan to make stability measurements at BNL and KEK to relate ATF2 FF magnet performance to that of a full length ILC QD0 R&D FF prototype under construction at BNL.

INTRODUCTION

Luminosity requirements of future linear colliders are quite challenging due to unprecedented demagnification needed in the FF. The ILC FF design calls for few nanometer interaction point (IP) spot sizes with a similar level of beam spot stability. With the ILC bunch structure it is envisioned to use fast feedback kicker magnets to relax the FF vibration tolerances; such fast feedback tests are in progress at ATF2. The present ATF2 FF uses warm magnet technology and we want togain operational experience with SC magnets by upgrading the ATF2 FF.

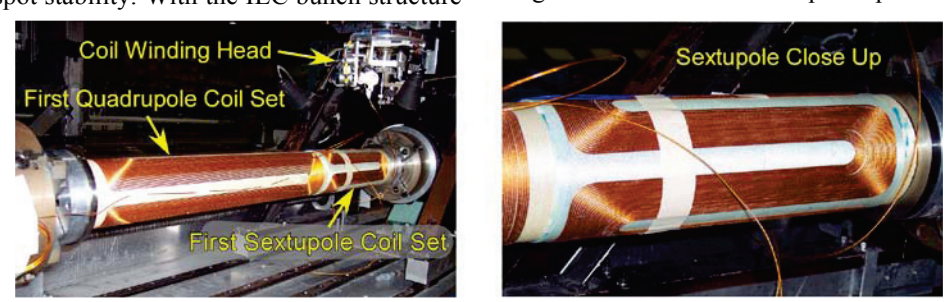

Figure 1: Start of ATF2 main quadrupole and sextupole Serpentine style coil winding.

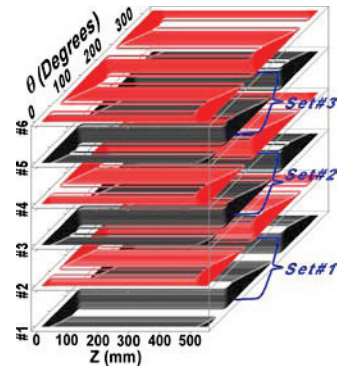

Figure 2: Quadrupole Coil Winding Layer Schematic. The final ATF2 quadrupole coil pattern has three coil sets for a total of six cable layers in series and two chances to make field harmonic corrections (with coil sets 2 and 3).

For a SC FF magnet upgrade, the new magnets can be stronger focusing, have larger apertures and better field quality than the existing ATF2 FF magnets. This is advantageous for future ATF2 ultra-low beta* studies. The SC magnet upgrade will also give us flexibility to change the distance to the IP and the FF quadrupole spacing in future optics experiments.

ATF2 SC UPGRADE MAGNETIC DESIGN

ATF2 Coil Production

Like the ILC QD0 FF magnet design, the ATF2 SC magnet cold mass has main quadrupole and sextupole coil windings on a shared support tube [2]. The coils are wound as multi-layer Serpentine style coil patterns using computer controlled Direct Wind technology developed at BNL [3]. The quad and sextupole coil patterns, formed from seven-strand round (about 1 mm diameter) cable, are shown in Figure 1. The sextupole coil was wound in two Serpentine coil sets (four layers total). Figure 2

* This manuscript has been authored by Brookhaven Science Associates, LLC under Contract No. DE-AC02-98CH10886 with the U.S. Department of Energy.
#parker@bnl.gov

Work supported by US Department of Energy contract DE-AC02-76SF00515.

SLAC National Accelerator Laboratory, Menlo Park, CA 94025

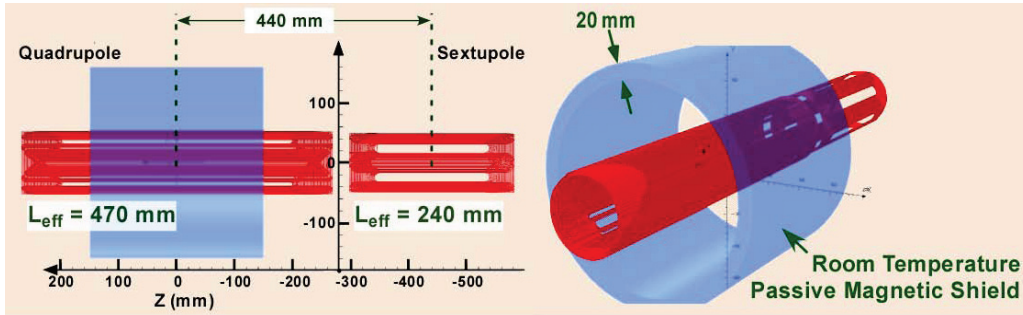

Figure 3: The ATF2 passive magnetic shield and coil layout. Effective magnetic lengths for the coils are as shown.

shows schematically how the quadrupole was wound in three coil sets for a total of six cable layers.

While we could easily reach the desired ATF2 FF integrated magnetic strengths with fewer cable layers, the KEK cryogenics experts requested adding extra turns to both coils to minimize the magnet operating currents and thereby reduce the heat load from the current leads. The ATF2 magnets shall be cooled with a small number of cryocoolers.

However winding the extra layers did give additional opportunities to make field harmonic corrections since we routinely measure and correct field harmonics during coil production [3]. The final coils have much better harmonic quality than the existing warm FF magnets [4]. Next we will wind low-current correction coils using single-strand conductor. These corrector coils will be used at ATF2 to magnetically shift magnetic centers, give effective coil rotations and possibly for compensation of magnetic focusing errors in upstream ATF2 beam line magnets [4].

ATF2 Magnetic Shielding

For the ILC 14 mr crossing angle scheme, the quadrupole magnets closest to the interaction point have active compensation coils to minimize the external field seen by the extracted beam that passes just outside the quadrupole coil structure. But the ATF2 beam line is actually half an interaction region; beam only goes in one direction to an absorber and there is no beam passing outside the magnet coils. So the ATF2 quadrupole coil structure was simplified with respect to the ILC QD0 by not having active external field compensation; however, we intend to monitor the ATF2 cryostat and cold mass vibration stability with devices that are sensitive to magnetic field. While our primary stability measurement uses a laser system and does not care about such fields, experience has shown that it is useful to cross-check laser results against standard accelerometers and Geophones that unfortunately are impacted by stray magnetic fields.

In order to provide convenient low magnetic field mounting points for such magnetically sensitive position monitors, we use the thin, warm, room temperature passive magnetic shield design shown in Figure 3. Because the shield is at larger radius than the SC coils, the shield adds less than 2% to the quadrupole transfer function and has no impact on magnetic field quality.

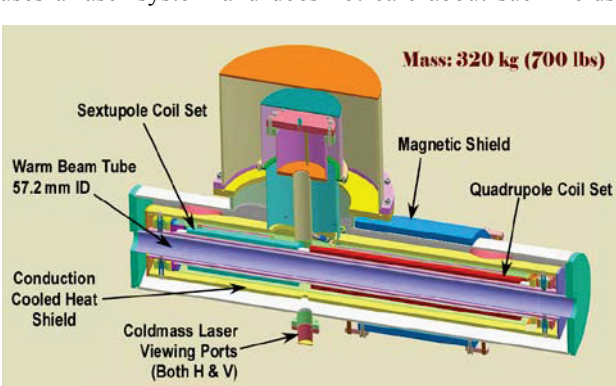

Figure 4: Magnet cryostat design features (as indicated).

ATF2 UPGRADE MECHANICAL DESIGN

ATF2 Magnet Cryostat

Figure 4, a cutaway view of the ATF2 magnet cryostat, shows where the magnetic shield is attached to the outer cryostat vessel. The ATF2 magnet will have a warm beam pipe, unlike the ILC's QD0 cold beam pipe (where radial space is at a premium), in order to simplify the interface and vacuum requirements to the rest of the ATF2 beam line. We have however kept as much as possible the same internal support structure style and heat shield design that is used in the ILC QD0 magnet [2]. An important design feature is that the ATF2 magnet shall be operated both with superfluid helium, at 1.9K like QD0, and at 4.2K. This permits us to link ATF2 magnet performance to that of the ILC QD0 R&D prototype while using a more convenient and economical 4.2K recondensing helium cryocooler system at KEK.

Magnetic Shield Modifications for Laser Ports

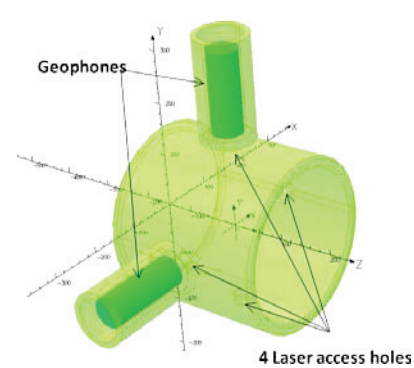

Figure 5: Magnetic shield design now has laser access to the magnetic center of the quadrupole coil. Four holes were created to maintain quad symmetry (only two used for lasers). Additional shielding around the Geophones counters local field spikes near the other penetrations.

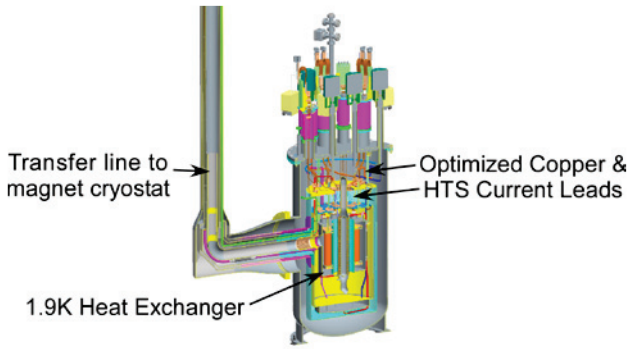

Figure 6: Cutaway View of the ILC Service Cryostat.

Originally we envisioned having horizontal and vertical laser access to the cold mass in the region between the magnet coils; however, to be able to distinguish between cold mass translations and tilts led we now require laser access at the magnetic centers of both magnet coils. For the sextupole this is straightforward but for the quadrupole we have to punch holes through the simple magnetic shield discussed so far.

Figure 5 shows our re-optimized shield configuration for laser access to the quad magnetic center. By making four holes, even though only two holes are used, we avoid spoiling the field quality by not creating a magnetic asymmetry. The Geophones are then mounted at the two unused locations and the increased leakage field through the holes is handled with additional shielding.

ATF2 Cryogenic Design Considerations

A fundamental design requirement for ATF2 SC magnet operation is that the system must be compatible with two modes of cryogenic operation. The first mode is 1.9K He-II operation uses the ILC QD0 Service Cryostat shown in Figure 6. The ILC QD0 magnet resides far inside the experimental detector and is connected to the Service Cryostat via a long transfer line. The ILC system uses pressurized He-II to avoid a "flowing working fluid" with the intention of not exciting mechanical vibrations in the transfer line and magnet cryostat. Testing the ATF2 magnet with the ILC Service Cryostat at BNL allows us to do early operation testing of the Service Cryostat, which is after all a fairly complex system, before we send the ATF2 magnet to KEK and permits a direct system performance comparison of between the ILC and ATF2 magnet systems.

The second, 4.2K LHe, operation mode is necessary because, unlike our BNL test area, ATF2 has no pre-existing cryogenic infrastructure and 1.9K operation via the Service Cryostat is just not feasible (also the Service Cryostat is needed at BNL for ILC QD0 testing). For ATF2 operation, KEK will construct a dedicated 4K connection box with cryocoolers and current leads. The layout proposed for the SC magnet and ATF2 4K connection box is shown in Figure 7. KEK has experience building low-vibration cryocooler cooled magnet systems and the arrangement shown, with the 4K box atop some massive radiation shielding blocks, facilitates direct access to the connection box while isolating the magnet

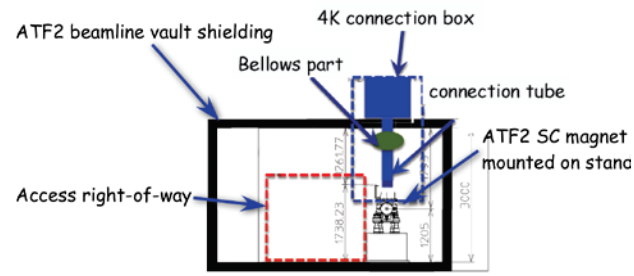

Figure 7: ATF2 SC Magnet with 4K Connection Box

from vibration via connection tube bellows. The connection box should arrive at BNL from KEK soon after 1.9K magnet testing with the Service Cryostat is complete in order that the 4K ATF2 operational system can be integrated with the magnet cryostat and tested at BNL before its shipment back to KEK.

ATF2 SC MAGNET OPERATION

Since the quadrupole and sextupole coils share a common support inside the magnet cryostat, a primary ATF2 SC magnet beam test goal will be to demonstrate that the magnetic degrees of freedom afforded by the SC correction coils actually work as planned and that this magnet system can be successfully integrated with the existing ATF2 fast feedback system. The corrector coils (which are not yet wound) will include dipole and skew-dipole coils atop the quad and skew-quadrupole and skew-sextupole coils atop the sextupole. Note for successful integration, we look to achieve SC magnet vibration stability of order 50 nanometers at a few Hertz.

In a second test phase we will try to reduce IP spot size below the basic 35 nm ATF2 target by reducing the IP beta* and here the good field quality achieved for the SC magnet is critical. We may also decide to add skew-octupole and skew-dodecapole correctors that should be useful to correct optic aberrations stemming from other ATF2 beam line magnets.

SUMMARY

We conclude that the SC magnet upgrade of ATF2 is a major step towards demonstrating advanced linear collider beam focusing optics for both the ILC and CLIC and is an important adjunct to the full scale ILC QD0 R&D prototype program.

REFERENCES

[1] ATF2 proposal, volumes 1 and 2 at http://lcdev.kek.jp/ILC-AsiaWG/WG4notes/atf2/proposal/index.html

[2] International Linear Collider Reference Design Report, ILC-REPORT-2007-001, August 2007.

[3] B. Parker and J. Escallier, "Serpentine Coil Topology for BNL Direct Wind Superconducting Magnets," contribution TOAA010, Proceedings of PAC 2005, Knoxville, Tennessee, USA (2005) pages 737-739, http://cern.ch/AccelConf/p05/PAPERS/TOAA010.PDF.

[4] E. Marins *et.al.*, "Scenarios for the ATF2 Ultra-Low Betas Proposal," contribution THPE020, this conference.