SLAC-PUB-1658
October 1975
(T/E)

MASSIVE PAIR PRODUCTION AND HADRONIC STRUCTURE*

C. T. Sachrajda† and R. Blankenbecler
Stanford Linear Accelerator Center
Stanford University, Stanford, California 94305

ABSTRACT

A brief review of the constituent theory of massive pair production for hadron, photon, and lepton beams is presented. Emphasis is given to a physical description of new production mechanisms in addition to the classic Drell–Yan process, and to predictions for hadron and lepton pairs from different incident beams. A kinematic characterization of the cross section arising from a general mechanism is given in terms of simple counting rules. The importance of experimentally determining the parameters of the characterization in different kinematic regimes is stressed. A subtitle of this note could be "What to do with your data when you don't find the D's."

(Submitted to Nucl. Phys. B.)

*Work supported by the U.S. Energy Research and Development Administration.
†Harkness Fellow.

The study of large transverse momentum processes, both elastic and single particle inclusive, has provided considerable insight into the dynamics of possible hadronic constituents.[1] In this note we argue that an analogous study of the production of a pair of particles (whether a pair of leptons or hadrons) with large invariant mass will prove equally valuable. A general framework for analyzing such processes is discussed. The detailed calculations are presented in Ref. 2; here we concentrate on the physics and present the predictions for various reactions.

The recent discovery of the very narrow, large mass resonances[3] has generated considerable interest in the theory of the production of lepton pairs with large invariant mass in hadron-hadron collisions. Although our results are valid away from the resonance region, some of the mechanisms discussed below may be responsible for the production of the ψ and ψ' in hadronic collisions.[4] The best known theoretical description of large mass lepton pair production is the model of Drell and Yan,[5] in which two point-like constituents annihilate, forming a heavy photon which then decays into the lepton pair. However, an upper bound derived for this model by Einhorn and Savit[6] showed that it seems much too small to fit the data.[7] The discovery of the $\psi(3.1)$ and its subtraction from the cross section has improved the situation considerably* but it is still not clear whether the Drell-Yan model can successfully explain the normalization and/or the kinematic dependence of the data. One possibility, which was briefly discussed in a SLAC workshop (Blankenbecler et al., ref. 4; see also ref. 9) is that there exist important basic processes in addition to the one proposed by Drell and Yan. Below we shall give rules which determine the energy and mass dependence of a general process. These rules are then extended to the production of a pair of hadrons with a large invariant mass.

---

*We thank Terry Goldman and Minh Duong-van for providing us with the results of their calculations on this point. See also ref. 8.

The amplitude for lepton-pair production in hadron-hadron collisions is decomposed as in Fig. 1. The basic subprocess $a+b \to \gamma + d \to \ell^+\ell^- + d$ is hadron irreducible. The differential cross section for the entire process is connected to that for the subprocess by

$$\frac{d\sigma}{dQ^2}(AB \to \ell^+\ell^- X) = \sum_{ab,d} \int dx_a dx_b G_{a/A}(x_a) G_{b/B}(x_b) \frac{d\sigma^I}{dQ^2}\left(ab \to \ell^+\ell^- d; s' = x_a x_b s, Q^2\right) \tag{1}$$

where $G_{a/A}(x)$ is the probability of finding an off-shell particle a in the particle A, with a fraction x of the momentum of A (defined in the infinite momentum frame) so that when a is a quark $xG_{a/A}(x) = \nu W_2(x)$. In the derivation of Eq. (1) it was assumed that the G functions damp the off-shell and transverse momentum behavior of a and b. The measurement of the $p_\perp$ distribution of the photon is very interesting since it yields information on the transverse momentum behavior of the G's.

In analyzing large transverse momentum reactions, it was found that a useful characterization of the single particle inclusive cross section is in terms of inverse powers of $p_\perp$, and powers of $\mathscr{E}$ where $\mathscr{E} = 1 - 4p_\perp^2/s$. In the case of massive pair production, we can characterize the cross section in an analogous way, and obtain the result

$$Q^4 \frac{d\sigma}{dQ^2} \propto \mathscr{E}^{\gamma + 2n_f} \left(\frac{g^2}{Q^2}\right)^{n_a + n_b - 2} \left(\frac{g^2}{\epsilon^2 Q^2}\right)^{\sum(n_{bnd} - 1)} \cdot S(\mathscr{E}) \tag{2}$$

where $\mathscr{E}$ is now equal to $1 - Q^2/s$. n_f is the number of quark fields in the final state and n_a and n_b are the number of quark fields in a and b, respectively. If there is a composite exclusive state arising from the basic process, then n_{bnd} is the number of quarks that are bound up in it, e.g., $n_{bnd} = 3$ for a baryon, 2 for a meson, and 1 for a free quark. g is an effective coupling constant with dimensions of mass. The parameter γ depends on the topology of the graph; $\gamma = -1$ for an annihilation type graph and $\gamma = 1$ for a bremsstrahlung type graph.

$S(\mathscr{E})$ is a factor that can arise from the spins of the particles involved in the process. If all of the spins were 0, $S(\mathscr{E})$ would be equal to 1. It will be further discussed below. The $\mathscr{E}$ and Q^2 behavior for pp and πp scattering for the sample set of subprocesses of Fig. 2 is given in Table 1, where $S(\mathscr{E})$ has been taken to be unity.

It will be interesting to see if the subprocesses which have been observed in large transverse momentum reactions are also important for large mass production. In particular quark-quark scattering is absent in large $p_\perp$ reactions, since if it were present it would lead to a similar behavior for the angular distribution of pp and $p\bar{p}$ elastic scattering and a $p_\perp^{-4}$ behavior for π inclusive production, neither of which is found experimentally. An important consistency question is whether this subprocess is also absent in large mass production.

For photoproduction of lepton pairs, the situation is slightly different due to the pointlike coupling in the photon structure function. The index of $\mathscr{E}$ changes from $\gamma + 2n_f$ to $\gamma + 2n_f^h + n_f^{e.m.}$ where $n_f^{e.m.}$ is the number of final state quarks arising from a point electromagnetic coupling, and n_f^h the number which arises through hadronic couplings.[10] The $\mathscr{E}$ and Q^2 behavior for the sample set of subprocesses of Fig. 2 is also listed in Table 1.

In order to determine which of the basic processes are important, it is necessary to extract the effective powers of $\mathscr{E}$ and Q^2. This requires data at different energies. For large transverse momentum processes, this was done in Ref. 10. If we write $Q^4 \frac{d\sigma}{dQ^2}$ as $\sim \mathscr{E}^H (Q^2)^{-N}$, then the effective parameters are defined as

$$H_{eff} = \mathscr{E} \frac{\partial}{\partial \mathscr{E}} \ln \left(Q^4 \frac{d\sigma}{dQ^2} \right) \Bigg|_{Q^2}$$

and

$$N_{eff} = -Q^2 \frac{\partial}{\partial Q^2} \ln\left(Q^4 \frac{d\sigma}{dQ^2}\right)\Bigg|_{\mathscr{E}} \tag{3}$$

In particular, it will be extremely interesting to determine whether the Drell-Yan model (process A in Fig. 2) indeed dominates heavy lepton pair production. If large transverse momentum processes are taken as a guide, several basic processes may well be important, depending upon the kinematic regime being probed, i.e., large Q^2, fixed $\mathscr{E}$, or small $\mathscr{E}$, fixed Q^2.

For the production of a pair of hadrons with large invariant mass, we decompose the amplitude as in Fig. 3. There exist processes which cannot be decomposed in this way (such as massive fireball production and decay), but we do not consider these processes here. For this decomposition the analogue of Eq. (1) is $(Q = C+D)$

$$\frac{d\sigma}{dQ^2}(AB \to CDX) = \sum_{ab,X} \int dx_a dx_b G_{a/A}(x_a)\, G_{b/B}(x_b) \frac{d\sigma}{dQ^2}\left(ab \to CDX; s' = x_a x_b s, Q^2\right) \tag{4}$$

and the differential cross section for the subprocess $a+b \to C+D+X$ is given by

$$Q^4 \frac{d\sigma}{dQ^2}(a+b \to C+D+X) = s^2 \int_1^\infty dw\, dz\, z\tilde{G}_{C/c}\left(\frac{1}{z}\right) w\tilde{G}_{D/d}\left(\frac{1}{w}\right) \times \frac{d\bar{\sigma}^I}{dt}(ab \to cd)\ \delta(wz - s/Q^2) \tag{5}$$

where the bar over $d\sigma/dt$ denotes that an angular integration has been performed. $\tilde{G}(x)$ is the probability, normalized to the multiplicity, for particle C to have a fraction x of the momentum along the direction of the timelike particle C (defined in the infinite momentum frame), and is related to G by the crossing equation

$$G_{c/C}(x) = \mp x\tilde{G}_{C/c}\left(\frac{1}{x}\right) \tag{6}$$

where if c and C obey the same (opposite) statistics then the minus (plus sign) is appropriate.

If the threshold behavior of the pion structure function is that given by the relation $\nu W_2(x) \sim (1-x)$ then clearly the crossing relation (6) is not satisfied. In fact Eq. (6) implies that if C and c obey opposite statistics the power of (1-x) in $G_{c/C}(x)$ must be even which is at least one power different from that given by the simple spectator counting rule (1). A model in which spin is carefully treated, so that Eq. (6) is satisfied, is that discussed by Ezawa[11] in which $\nu W_2(x) \sim (1-x)^2$ for the pion. The factor $S(\mathscr{E})$ will be set equal to unity throughout this note but its possible presence should be kept in mind.

In terms of powers of $\mathscr{E}$ and Q^2, Eq. (4)-(6) can be combined to give

$$Q^4 \frac{d\sigma}{dQ^2}(A+B \rightarrow C+D+X) \propto \mathscr{E}^{2n_s-1} S(\mathscr{E})(Q^2)^{-(n_a+n_b+n_c+n_d)+4} , \quad (7)$$

where $S(\mathscr{E})$ is the additional factors of $\mathscr{E}$ as required by the spin dependence of the crossing relation (6). n_s is the number of final state quarks <u>not</u> in the large mass trigger system CD. For photoproduction the situation is slightly different; as before $2n_s$ is replaced by $2n_s^h + n_s^{e.m.}$. The application of Eq. (7) to a sample set of subprocesses for pp, πp, and γp reactions is presented in Table 2. In each case in Table 2 the mesons are chosen so as to leave the minimum number of spectator quarks; for "exotic" processes such as a p quark + $\bar{p}$ quark $\rightarrow \pi^+\pi^+X$ additional powers of $\mathscr{E}$ are present and given by Eq. (7).

Using Table 2 and Eq. (7) we can write the cross section for $pp \rightarrow \pi^+\pi^-X$ as

$$Q^4 \frac{d\sigma}{dQ^2} = \mathscr{E}^{11}(A + BQ^{-4} + CQ^{-8} + \ldots) \quad . \quad (8)$$

For $\pi^\pm\pi^\pm$, $K^+K^\pm$, $K^+\pi^\pm$ triggers, the cross section can be written in the same way, but of course the values of A, B, etc., will be certainly different (e.g., for

a K^+K^- trigger A=0). For $\pi^\pm K^-$ triggers, the $\mathscr{E}$ power changes to 15 and for a K^-K^- trigger it is 19. The leading term for small $\mathscr{E}$ in the invariant mass distribution $Q^4\, d\sigma/dQ^2$ for $p\pi^\pm$ or pK^+ particles is $\mathscr{E}^5 Q^{-8}$, whereas for a pK^- trigger it is $\mathscr{E}^9 Q^{-8}$, for $\bar{p}p$ it is $\mathscr{E}^{11} Q^{-8}$, and for $\bar{p}\pi$ it is $\mathscr{E}^{17} Q^{-8}$. In particular kinematic domains, higher order terms in $\mathscr{E}$ may be important, and an effective power analysis (see Eq. (3)), should prove useful in determining whether this is indeed the case. Again we emphasize that the dominant limiting behaviors for large Q^2 and for small $\mathscr{E}$ are expected to be different and in general to arise from different basic processes. It is important to see if this is experimentally the case.

A particularly interesting application of Eqs. (5) and (7) is in the reaction $e^+e^- \to h_1 h_2 X$ where the two hadrons have a large invariant mass. If we assume that this reaction can be decomposed as (see Fig. 4)

$$e^+e^- \to \gamma \to q\bar{q} \to (h_1+X_1) + (h_2+X_2) \tag{9}$$

then it is a "crossed" Drell-Yan process. Unlike the classic Drell-Yan process however, the effects of the ψ particles can be eliminated by choosing the initial energy appropriately. For this reaction $\frac{d\sigma}{dt} \sim s^{-2}$ so that at fixed $\mathscr{E}$, the differential cross section $Q^4 \frac{d\sigma}{dQ^2}$ should be energy independent. If this proves to be the case then this process will provide us with considerable information about the $\tilde{G}$ functions and hence about the crossing relation (6). For example, it may be possible to distinguish between the (1-x) and $(1-x)^2$ for the threshold behavior of the pion structure function, since in $e^+e^- \to \pi^+\pi^- X$ the structure function appears twice, so that $Q^4\, d\sigma/dQ^2 \sim \mathscr{E}^3$ in the first case and $\mathscr{E}^5$ in the second. For each pair of trigger hadrons, Eq. (7) provides the Q^2 and $\mathscr{E}$ behavior, and in Table 3 we list this behavior for a sample set of trigger particles explicitly.

The simplest comparison with the data is perhaps to study and compare the distributions for mesons with equal and with opposite charges, since this does not require an experimental distinction between pions and kaons. At small Q^2, these distributions could be quite similar but of a different magnitude, whereas at larger Q^2, the distributions should differ by a factor of $\mathscr{E}^4$. It will be interesting to see if the predictions of Table 3 are confirmed for small $\mathscr{E}$ where the present data approximately scales. The violations of scaling at large $\mathscr{E}$ if due to the production of heavy quarks can also be studied in a similar way. These types of reactions will be studied in more detail in Ref. 12.

We have attempted to present a general theoretical framework to describe large mass pair production and to argue that it can be a very valuable tool in the study of the dynamics of hadronic constituents.

REFERENCES

[1] D. Sivers, R. Blankenbecler and S. J. Brodsky, Stanford Linear Accelerator Center preprint SLAC-PUB-1595 (1975) (to be published in Physics Reports), and references therein.

[2] C. T. Sachrajda and R. Blankenbecler, Stanford Linear Accelerator Center preprint SLAC-PUB-1594 (1975) (to be published in Phys. Rev. D).

[3] J. J. Aubert et al., Phys. Rev. Letters 33 (1974) 1404;
J. E. Augustin et al., Phys. Rev. Letters 33 (1974) 1406;
C. Bacci et al., Phys. Rev. Letters 33 (1974) 1408;
G. S. Abrams et al., Phys. Rev. Letters 33 (1974) 1453.

[4] R. Blankenbecler, T. Goldman, T. Neff, C. Sachrajda, D. Sivers and J. Townsend, Stanford Linear Accelerator Center preprint SLAC-PUB-1531 (1975); T. Goldman, Stanford Linear Accelerator Center preprint SLAC-PUB-1538 (1975); J. F. Gunion, Pittsburgh preprint PITT-138 (1975); and M. B. Green, M. Jacob and P. V. Landshoff, DAMTP preprint 75/3 (1975). M. Duong-van, Stanford Linear Accelerator Center preprint SLAC-PUB-1603 (1975).

[5] S. D. Drell and T. M. Yan, Phys. Rev. Letters 25 (1970) 316;
Ann. Phys. 66 (1971) 578.

[6] M. B. Einhorn and R. Savit, Phys. Rev. Letters 33 (1974) 392.

[7] J. H. Christenson et al., Phys. Rev. D 8 (1973) 2016.

[8] G. Farrar, Caltech preprint CALT 68-497 (1975).

[9] J. C. Polkinghorne, CERN discussion document on large p_T (1975).

[10] R. Blankenbecler, S. J. Brodsky and J. Gunion, Stanford Linear Accelerator Center preprint SLAC-PUB-1585 (1975). B. Alper et al., Nucl. Phys. B87 (1975) 19. G. Jarlskog, Tenth Rencontre de Moriond, 1975 (ed. J. Tran Thanh Van, Orsay, France).

[11] Z. F. Ezawa, Nuovo Cimento 23A (1974) 271.

[12] R. Blankenbecler, S. J. Brodsky and C. T. Sachrajda, Stanford Linear Accelerator Center preprint (in preparation).

TABLE 1

$$Q^4 \frac{d\sigma}{dQ^2} \text{ for pp, } \pi p, \gamma p \to \ell^+\ell^-$$

Basic Subprocess/Physical Process	$pp \to \ell^+\ell^-\chi$	$\pi p \to \ell^+\ell^-\chi$	$\gamma p \to \ell^+\ell^-\chi$
(a) $q\bar{q} \to \ell^+\ell^-$	$\mathscr{E}^{11}$	$\mathscr{E}^{5}$	$\mathscr{E}^{4}$
(b) $qq \to q\bar{q}\ell^+\ell^-$	$\mathscr{E}^{13}$	$\mathscr{E}^{11}$	$\mathscr{E}^{10}$
(c) $M+q \to q\ell^+\ell^-$	$\mathscr{E}^{13}(Q^2)^{-1}$	$\mathscr{E}^{7}(Q^2)^{-1}$	$\mathscr{E}^{7}(Q^2)^{-1}$
(d) $M+q \to \bar{q}+q+q\ell^+\ell^-$	$\mathscr{E}^{17}(Q^2)^{-1}$	$\mathscr{E}^{11}(Q^2)^{-1}$	$\mathscr{E}^{11}(Q^2)^{-1}$
(e) $q+(2q) \to 3q\ell^+\ell^-$	$\mathscr{E}^{13}(Q^2)^{-1}$	$\mathscr{E}^{11}(Q^2)^{-1}$	$\mathscr{E}^{10}(Q^2)^{-1}$
(f) $M\bar{M} \to \ell^+\ell^-$	$\mathscr{E}^{11}(Q^2)^{-2}$	$\mathscr{E}^{5}(Q^2)^{-2}$	$\mathscr{E}^{5}(Q^2)^{-2}$
(g) $(2q)+(2q) \to 4q\ell^+\ell^-$	$\mathscr{E}^{13}(Q^2)^{-2}$	$\mathscr{E}^{15}(Q^2)^{-2}$	$\mathscr{E}^{14}(Q^2)^{-1}$

TABLE 2

$Q^4 \frac{d\sigma}{dQ^2}$ for the reactions pp; πp; γp $\rightarrow$ MMχ

Basic Subprocess/Physical Process	pp $\rightarrow$ MMχ	πp $\rightarrow$ MMχ	γp $\rightarrow$ MMχ
(a) $q+q \rightarrow q+q$	$\mathscr{E}^{11}$	$\mathscr{E}^{9}$	$\mathscr{E}^{8}$
(b) $q+M \rightarrow q+M$	$\mathscr{E}^{11}(Q^2)^{-2}$	$\mathscr{E}^{5}(Q^2)^{-2}$	$\mathscr{E}^{5}(Q^2)^{-2}$
(c) $q+2q \rightarrow B+M$	$\mathscr{E}^{11}(Q^2)^{-4}$	$\mathscr{E}^{9}(Q^2)^{-4}$	$\mathscr{E}^{8}(Q^2)^{-4}$
(d) $M+M \rightarrow M+M$	$\mathscr{E}^{11}(Q^2)^{-4}$	$\mathscr{E}^{5}(Q^2)^{-4}$	$\mathscr{E}^{5}(Q^2)^{-4}$
(e) $q+\bar{q} \rightarrow M^+M^-$	$\mathscr{E}^{11}(Q^2)^{-2}$	$\mathscr{E}^{5}(Q^2)^{-2}$	$\mathscr{E}^{4}(Q^2)^{-2}$

TABLE 3

$Q^4 \frac{d\sigma}{dQ^2}$ (for small $\mathscr{E}$) for $e^+e^- \rightarrow h_1 h_2 \chi$

Trigger Particles ($h_1 h_2$)	Small $\mathscr{E}$ Behavior
$\pi^+\pi^-$, K^+K^-, π^+K^-, π^-K^+	$\mathscr{E}^3$
$p\pi^-$, $p\pi^+$, pK^-	$\mathscr{E}^5$
$\pi^+\pi^+$, $\pi^-\pi^-$, K^+K^+, K^-K^-, $K^+\pi^+$, $\bar{p}p$	$\mathscr{E}^7$
pK^+	$\mathscr{E}^9$
pp	$\mathscr{E}^{11}$

Figure Captions

1. General decomposition of inclusive lepton pair production in hadronic collisions. The overall process $A+B \rightarrow \ell^+\ell^-\chi$ is written in terms of the hadron irreducible subprocesses $a+b \rightarrow \ell^+\ell^- d$.
2. A sample set of subprocesses for inclusive lepton pair production.
3. Decomposition of the inclusive production of a pair of hadrons with large invariant mass in hadronic collisions.
4. Model decomposition of the inclusive production of a pair of hadrons with large invariant mass in e^+e^- collisions.

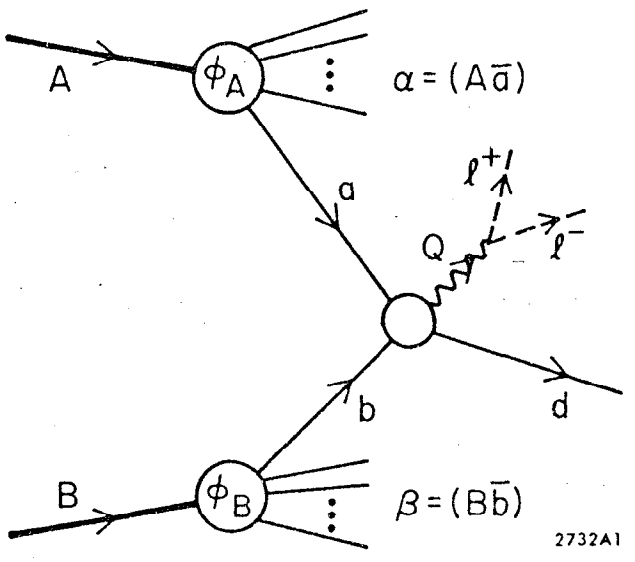

Fig. 1

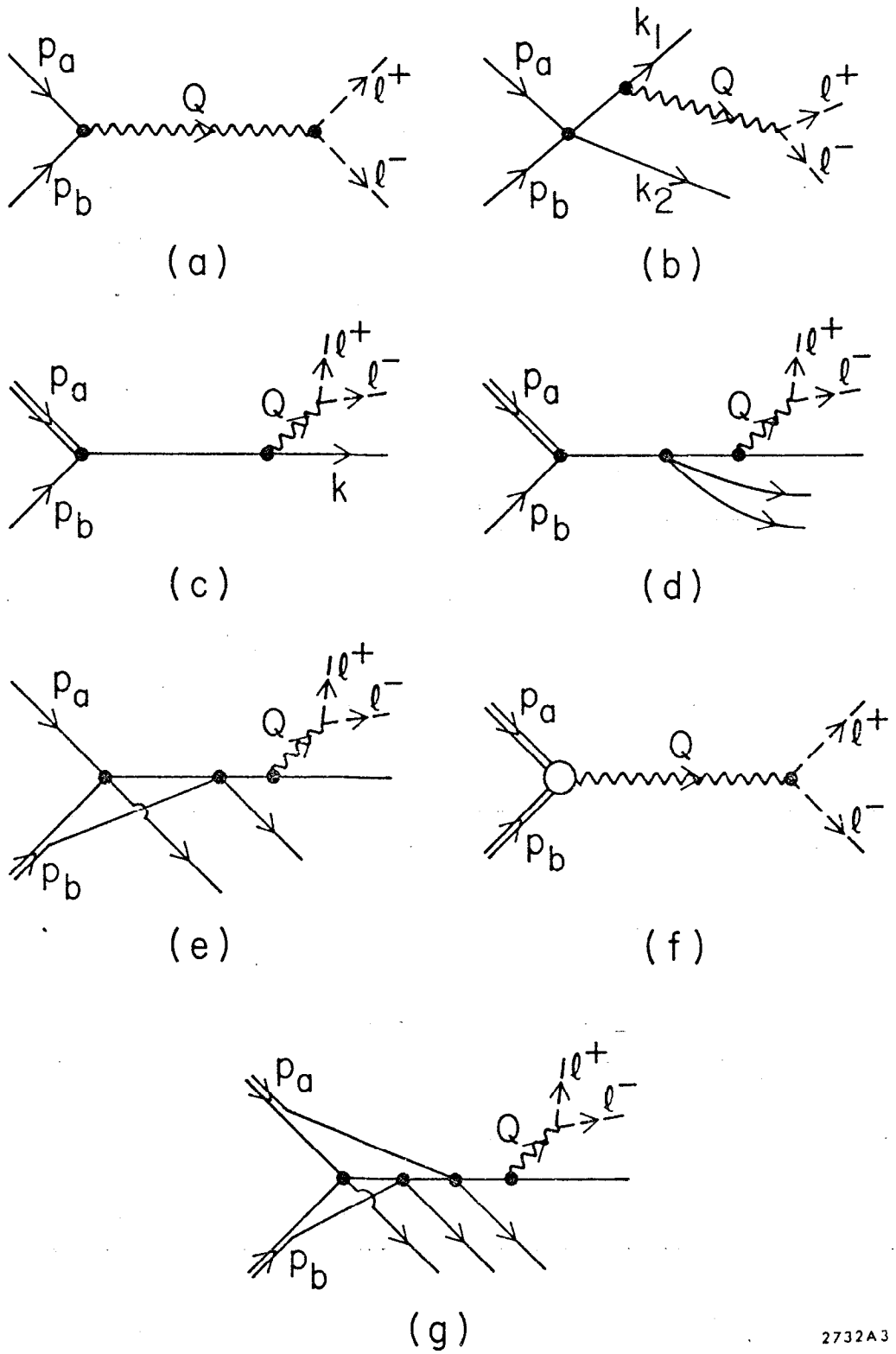

Fig. 2

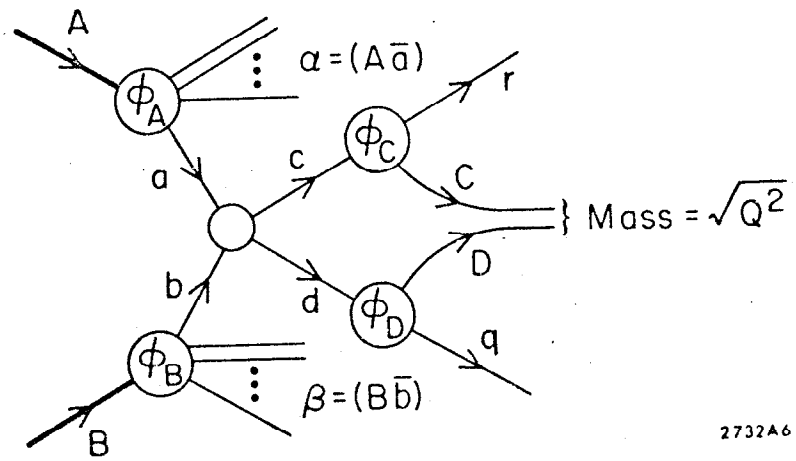
A
$\alpha = (A\bar{a})$
ϕ_A
a
c
ϕ_C
r
C
} Mass = $\sqrt{Q^2}$
D
b
d
ϕ_D
q
ϕ_B
$\beta = (B\bar{b})$
B
2732A6

Fig. 3

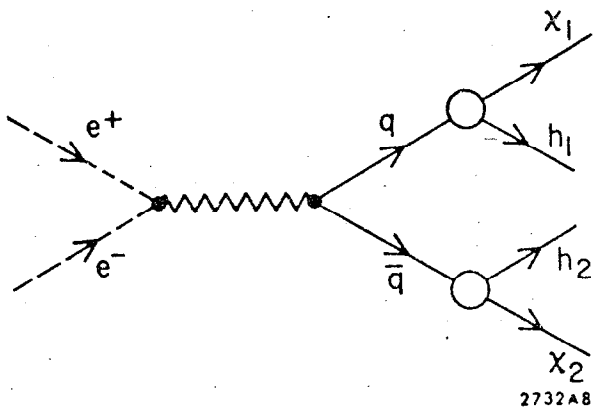
e^+
e^-
q
$\bar{q}$
x_1
h_1
h_2
x_2
2732A8

Fig. 4