SLAC-PUB-1511
November 1974
(T/E)

EXPERIMENTAL UPPER LIMIT ON THE PHOTOPRODUCTION CROSS SECTION FOR THE $\psi(3105)$

J.F. Martin, C. Bolon, R.L. Lanza,
D. Luckey, L.S. Osborne, and D.G. Roth

Laboratory for Nuclear Science, Massachusetts Institute of Technology,
Cambridge, Massachusetts 02139*

J.T. Dakin

Department of Physics and Astronomy, University of Massachusetts,
Amherst, Massachusetts 01002†

G.J. Feldman, G. Hanson
D.E. Lyon, M.L. Perl, and T. Pun

Stanford Linear Accelerator Center
Stanford University, Stanford, California 94305*

ABSTRACT

The experimental upper limit for the diffractive photoproduction of the $\psi(3105)$ is 29 nb, with 90% confidence, at an average photon energy of 18.2 GeV.

(Submitted to Phys. Rev. Letters)

*Work supported by U.S. Atomic Energy Commission.

†Work supported by U.S. National Science Foundation.

The newly discovered $\psi(3105)$[1,2] and $\psi(3695)$[1] particles share an important property with the ρ^0, ω, and ϕ vector mesons -- they are produced copiously in e^+e^- annhilation. An interesting question is how the photoproduction cross sections for the ψ's compare with the vector meson photoproduction cross sections. Using data from a just completed hadron electroproduction experiment, we are able to show that the $\psi(3105)$ production cross section is considerably smaller.

In the electroproduction experiment[3], Fig. 1, a 20.5 GeV electron beam at the Stanford Linear Accelerator Center interacts in a liquid hydrogen or liquid deuterium target. The scattered electron and any other particles produced in the interaction pass through an analyzing magnet into a 12,000 wire proportional chamber system. A superconducting tube passing through the center of the magnet shields the exiting electron beam from the analyzing magnet, thus drastically reducing background.

The trigger for recording data from the proportional chambers comes from a bank of scintillation counters and lead-lucite sandwich shower counters at the rear of the apparatus. The trigger requirement is that at least one high energy electron enter the shower counters. Hence the experiment is sensitive to the reaction

$$\gamma + N \rightarrow \psi + N \ , \quad \psi \rightarrow e^+ + e^- \ ,$$

where γ is either a real photon or a very low q^2 virtual photon produced in the target by the incident electron beam, and N is a proton or a neutron. The two electrons from the ψ decay are detected and identified by the shower counters. In this reaction the incident electron generally scatters at a very small angle and is not detected.

The data presented here corresponds to 4.2×10^{13} electrons incident on a 4 cm hydrogen target and 3.6×10^{13} electrons incident on a 4 cm deuterium target. The number of detected electron-positron pairs as a function of their invariant mass is shown in Fig. 2. We find only one event above a mass of 2.65 GeV/c^2; it has the tantalizing mass of $3.090 \pm .045$ GeV/c^2. It has an energy of 19.5 GeV and is produced with a transverse momentum squared of .025 $(\text{GeV}/c)^2$. The events below 2.65 GeV/c^2 are consistent with being inclusive π^+ electroproduction events in which the π^+ has been misidentified as a positron. The expected background from this source is shown by the solid line of Fig. 2. The dashed curve on Fig. 2 indicates the relative acceptance for an average photon energy of 18 GeV.

To deduce an upper limit on the photoproduction cross section from these results we go through the following steps:

1. We calculate the flux of very low q^2 virtual transverse photons carried along by the electrons, as well as the flux of real photons produced by electron bremsstrahlung in the target. The ratio of the former to the latter is about 5 to 1. We ignore the flux of virtual scalar photons.

2. We assume that the ψ is produced diffractively with a differential cross section of the form

$$d\sigma(\gamma N \rightarrow \psi N)/dt = A\, e^{-bp_\perp^2}$$

with b taken to be either 4 $(\text{GeV}/c)^{-2}$ or 8 $(\text{GeV}/c)^{-2}$, the range encountered in vector meson photoproduction.

3. We assume a decay angular distribution in the center of mass for the $\psi \rightarrow e^+ + e^-$ mode of the form $1 + \cos^2\theta$.

4. We use a branching ratio of 0.06[1] for $\psi \rightarrow e^+ + e^-$.

5. We assume the cross section is independent of the photon energy. The average relevant photon energy is 18.2 GeV and the relevant photon spectrum extends from 14 to 20.5 GeV.

At an invariant mass of 3105 MeV/c^2, one event corresponds to a photoproduction cross section per nucleon of 7.5 nb for b = 4 $(\mathrm{GeV}/c)^{-2}$. We can state with 90% confidence that the $\psi(3105)$ photoproduction cross section per nucleon is less than 29 nb. A comparison of this upper limit with the photoproduction cross sections for vector mesons[4] is given in Table I. We see that the $\psi(3105)$ photoproduction cross section is smaller than that of the ϕ meson by at least a factor of 20.

If we use a vector dominance model for the photoproduction of the $\psi(3105)$ we can set an upper limit on the total cross section of the ψ on a nucleon, $\sigma(\psi N)$, by using the relation

$$\sigma^2(VN) = 16\pi(g^2/e^2) \left[d\sigma(\gamma N \to VN)/dt\right]_{t=0}$$

In this model the V couples to the photon with the coupling constant e/g_V, where e is the electric charge and $g_V^2/4\pi$, obtained from the e^+e^- colliding beam measurements[1,5], is given in Table I. We have also used

$$\left[\frac{d\sigma(\gamma N \to VN)}{dt}\right]_{t=0} = e^{b|t_{min}|}\left[\frac{d\sigma(\gamma N \to VN)}{dt}\right]_{p_\perp=0} \qquad (1)$$

The upper limits on $\sigma(\psi N)$ are given in Table I. These limits are quite dependent upon the value assumed for b; nevertheless we observe that $\sigma(\psi N)$ is less than even the smallest of the total cross sections, namely $\sigma(\phi N)$.

On the other hand the e^+e^- colliding beam production of the $\psi(3105)$ may have nothing to do with vector meson dominance ideas. For example, one might speculate on a direct electron-electron-coupling. In that case one might expect some direct electroproduction of the $\psi(3105)$. We find an upper limit with 90% confidence of 0.46 nb per nucleon for the direct electroproduction of the $\psi(3105)$ by 20.5 GeV electrons. In this calculation we have used steps 2, 3, and 4, although there is no reason to assume step 2 in this case.

The branching ratio of the $\psi(3695)$ into e^+e^- is not yet known. However, based on the data in Fig. 2, the 90% confidence upper limit on the diffractive photoproduction of the $\psi(3695)$ is 4.5 nb divided by the branching ratio into e^+e^-, for b=4 $(\mathrm{GeV}/c)^{-2}$.

REFERENCES

1. J.-E. Augustin et al., SLAC-PUB-1504 (1974) (to be published in Phys. Rev. Letters; G.S. Abrams et al., SLAC-PUB-1510 (1974) (to be published in Phys. Rev. Letters).
2. J.J. Aubert et al., MIT Laboratory for Nuclear Science Report COO-3069-271 (1974) (to be published in Phys. Rev. Letters).
3. This apparatus is an improved version of the spectrometer used for earlier electroproduction experiments. See J.T. Dakin et al., Phys. Rev. D8, 687 (1973); Phys. Rev. D10, 1401 (1974).
4. J. Ballam et al., Phys. Rev. D7, 3150 (1973).
5. D. Benaksas et al., Phys. Letters 39B 289 (1972); ibid, 42B, 507 (1972); G. Cosme et al., Phys. Letters 48B, 155 (1974).

TABLE I. Properties of the vector mesons[4] and $\psi(3105)$[1] photoproduction cross section, $d\sigma(\gamma N \rightarrow VN)/dt = A \exp(-b|t|)$; the vector meson dominance model coupling constant $g_V^2/4\pi$, obtained from e^+e^- colliding beam measurements[1,5]; and the total cross section $\sigma(VN)$ obtained from Eq. 1 in the text. For the ψ the cross sections are 90% confidence upper limits.

Particle	Photon Energy (GeV)	$(\gamma N \rightarrow VN)$ (nb)	b $(GeV/c)^{-2}$	$g_V^2/4\pi$	$\sigma(VN)$ (mb)
ρ^0	9.3	13,500 ± 500	6.5 ± 0.2	2.3 ± 0.3	23 ± 3
ω	9.3	1,800 ± 300	6.6 ± 1.1	18.4 ± 1.8	24 ± 3
ϕ	9.3	550 ± 70	4.6 ± 0.7	12.2 ± 1.0	9 ± 1
$\psi(3105)$	18.2	< 29	4 (assumed)	13 ± 4	< 2.4
$\psi(3105)$	18.2	< 27	8 (assumed)	13 ± 4	< 3.6

FIGURE CAPTIONS

1. Schematic drawing of apparatus. Shaded region is magnetic field. A downstream gas Cherenkov counter covering one eighth of the acceptance is not shown.
2. Histogram of e^+e^- pair masses greater than 1.5 GeV. The solid curve represents the expected background from π^+e^- pairs. The dashed line indicates the calculated relative acceptance (to arbitrary scale).

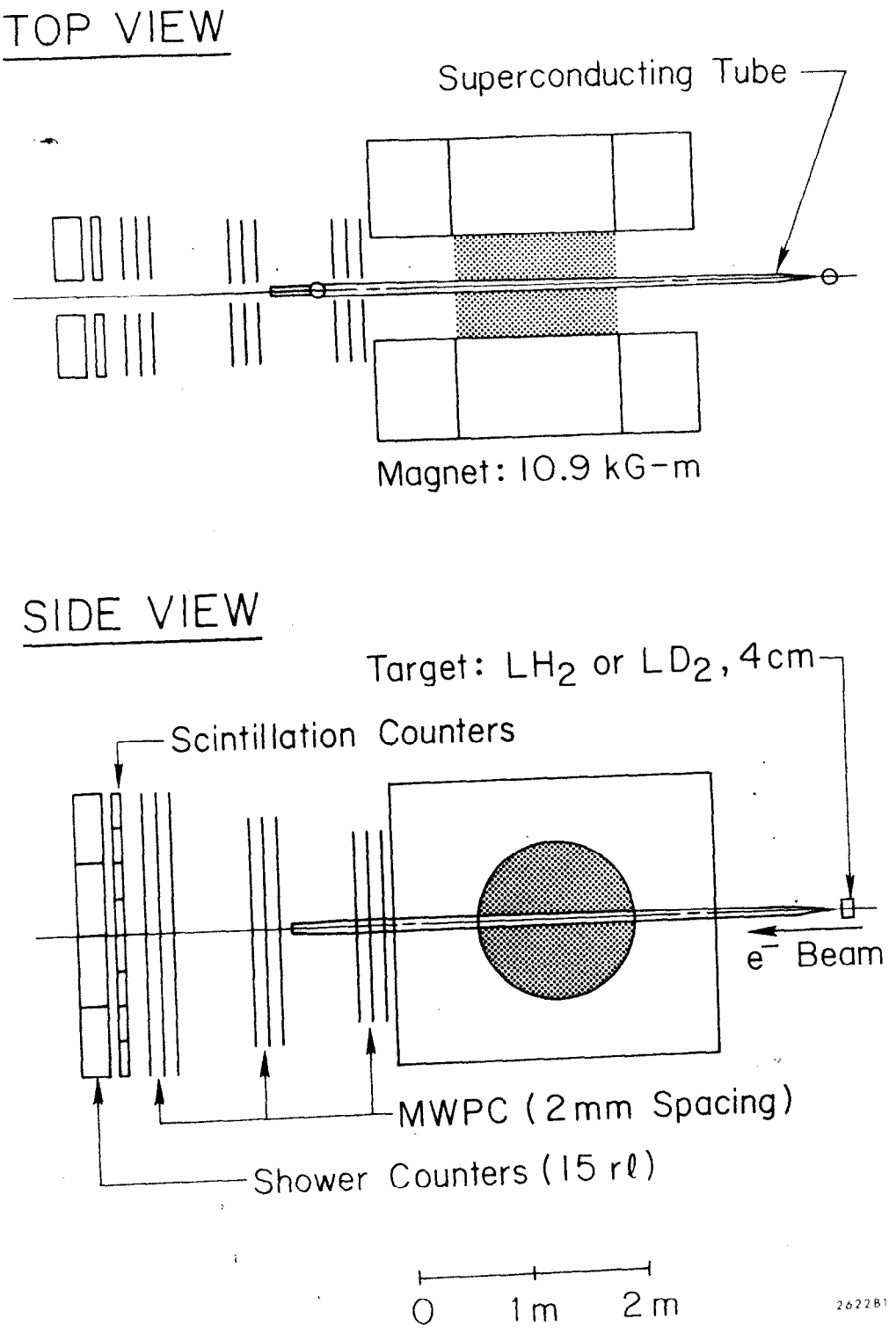
TOP VIEW
Superconducting Tube
Magnet: 10.9 kG-m
SIDE VIEW
Target: LH_2 or LD_2, 4cm
Scintillation Counters
e^- Beam
MWPC (2mm Spacing)
Shower Counters (15 rℓ)
0
1m
2m
2622B1

FIG. 1

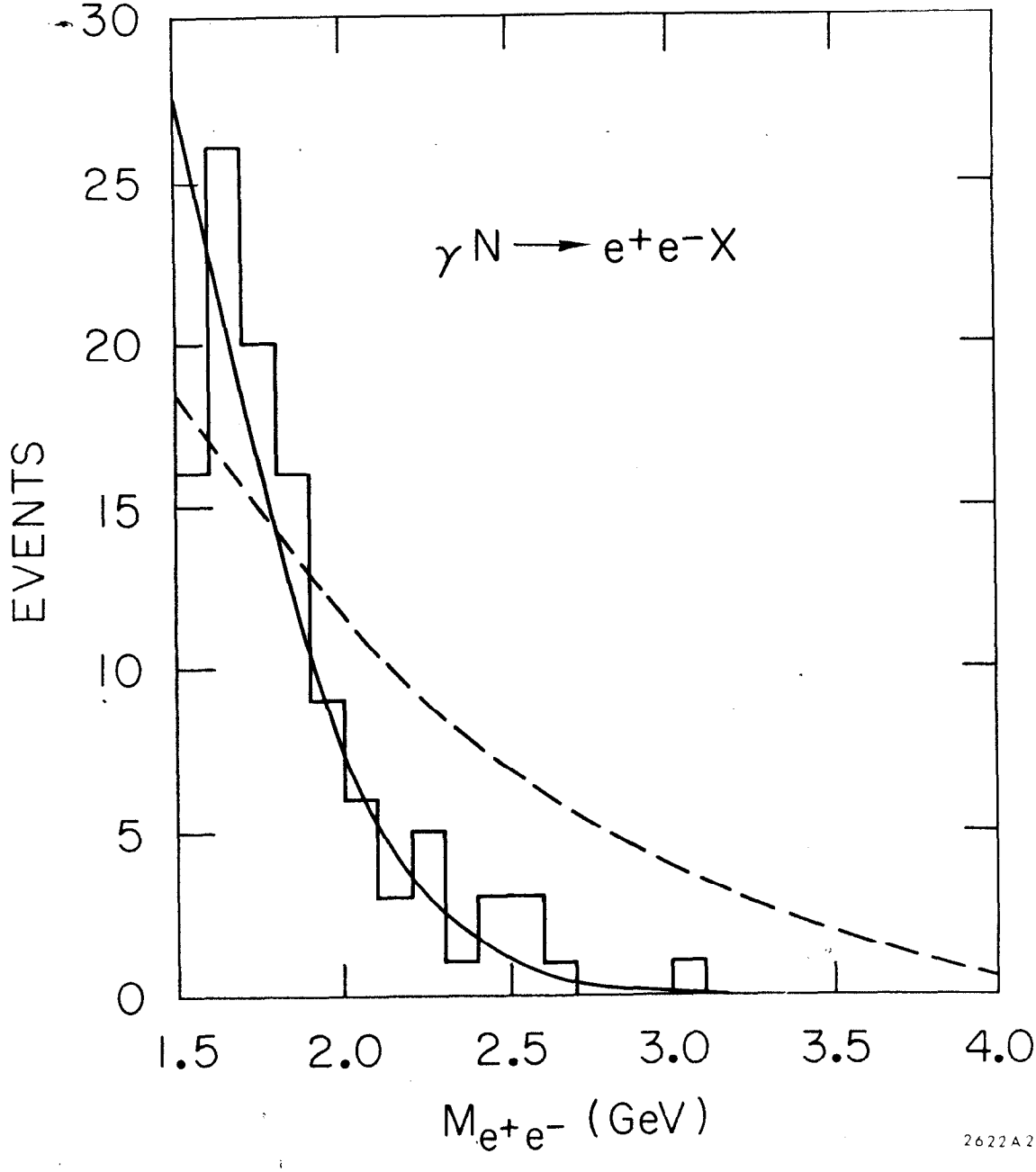
30
25
20
15
10
5
0
EVENTS
$\gamma N \rightarrow e^+e^-X$
1.5
2.0
2.5
3.0
3.5
4.0
$M_{e^+e^-}$ (GeV)
2622A2

FIG. 2