SLAC-PUB-1250
(I)
May 1973

THE STREAMER CHAMBER†

Francesco Villa
Stanford Linear Accelerator Center
Stanford University
Stanford, California 94305

INTRODUCTION

The report will describe briefly recent technical improvements in the field of streamer chamber hardware. The accuracy and resolution of the SLAC 2-meter chamber are discussed in some detail, together with other streamer chamber facilities now operational. Few suggestions for future improvements are given.

A NEW FILM

The most recent, and perhaps the most significant development is a new film by Kodak (named SO121) with much finer grain, far better antihalation properties†† and about the same speed of the SO265. Figure 1 shows a resolution

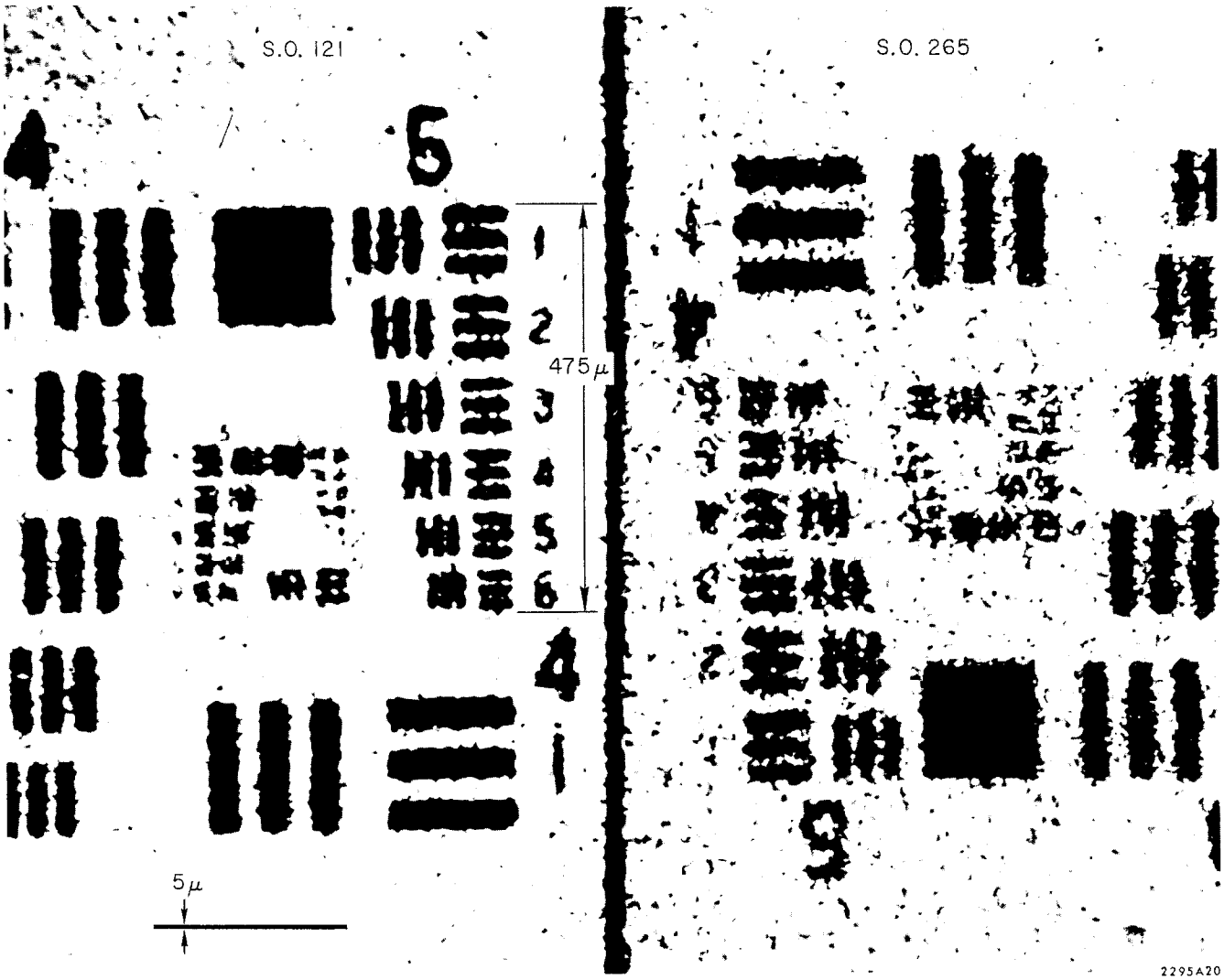

FIG. 1--Resolution chart on SO121 and SO265. The scale indicates the size of the pattern on film. The 5 micron thick line shows the size of the minimum setting error.

†Work supported by the U. S. Atomic Energy Commission.

††Better antihalation properties are achieved by a light absorbing dye immediately under the emulsion. The dye absorbs light transmitted through the emulsion, and again when the light is totally reflected by the backing, hence reducing the spread of the image on the emulsion. The dye is removed by washing during the processing of the film.

(Presented at Internat'l. Conf. on Instrumentation for High Energy Physics, Frascati, Italy, May 8-12, 1973)

chart contact printed on the two films. Figure 2 shows a test pattern on the two films, both at normal exposure, 10, 100, and 1000 times overexposed. The antihalation properties are very important in streamer chamber film, since tracks at a small angle ($< 10^{o}$) with the electric field generate sparks $\sim$1000 times brighter than streamer tracks.

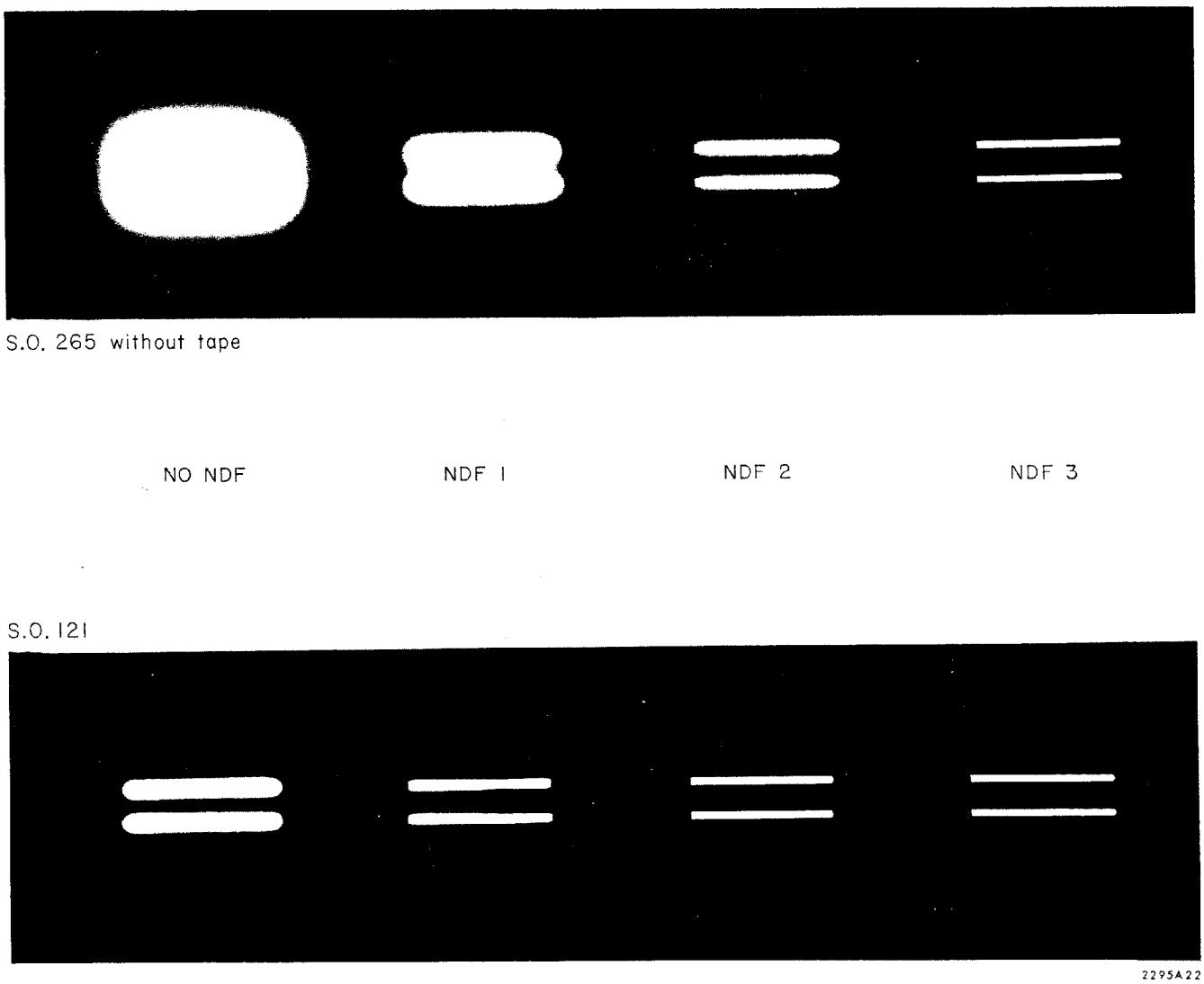

FIG. 2--From right to left the double line is exposed normally, 10 times, 100 times, and 1000 times. The distance between the two lines is 1.5 mm on film.

We have tested some SO121 in the SLAC chamber; the pictures were taken during the μp deep inelastic experiment with π's ($\sim 10/\mu s$) going through the 40 cm long liquid H_2 target. The same event is photographed by two stereo cameras loaded with the two films. Figures 3, 4, 5, and 6 are two representative events. The appearance of tracks is substantially improved, sparks are reduced in size, and very steep tracks do not show as much halo. Further improvements are expected from a more careful darkening of the electrodes and from a denser antihalation layer in the film.

LIQUID H_2 TARGETS

The last experiment completed in the SLAC streamer chamber was a K^-p (7.1 GeV/c) exposure looking for hyperon excited states (Ξ^* experiment). In order to see as close as possible to the interaction region we have constructed a liquid hydrogen target with only $\sim$1 mm vacuum insulation, 13 mm OD, .3 mm wall for the outside vacuum tube, 10 mm, .125 mm wall inner hydrogen flask (Fig. 7). The hydrogen is pumped through the target from and back to a reservoir by a tube inside the flask (2 mm diameter, .05 mm wall). Some of the liquid in the reservoir evaporates, providing the 15 watts needed by the target heat losses. Typical temperature difference between inlet and outlet was

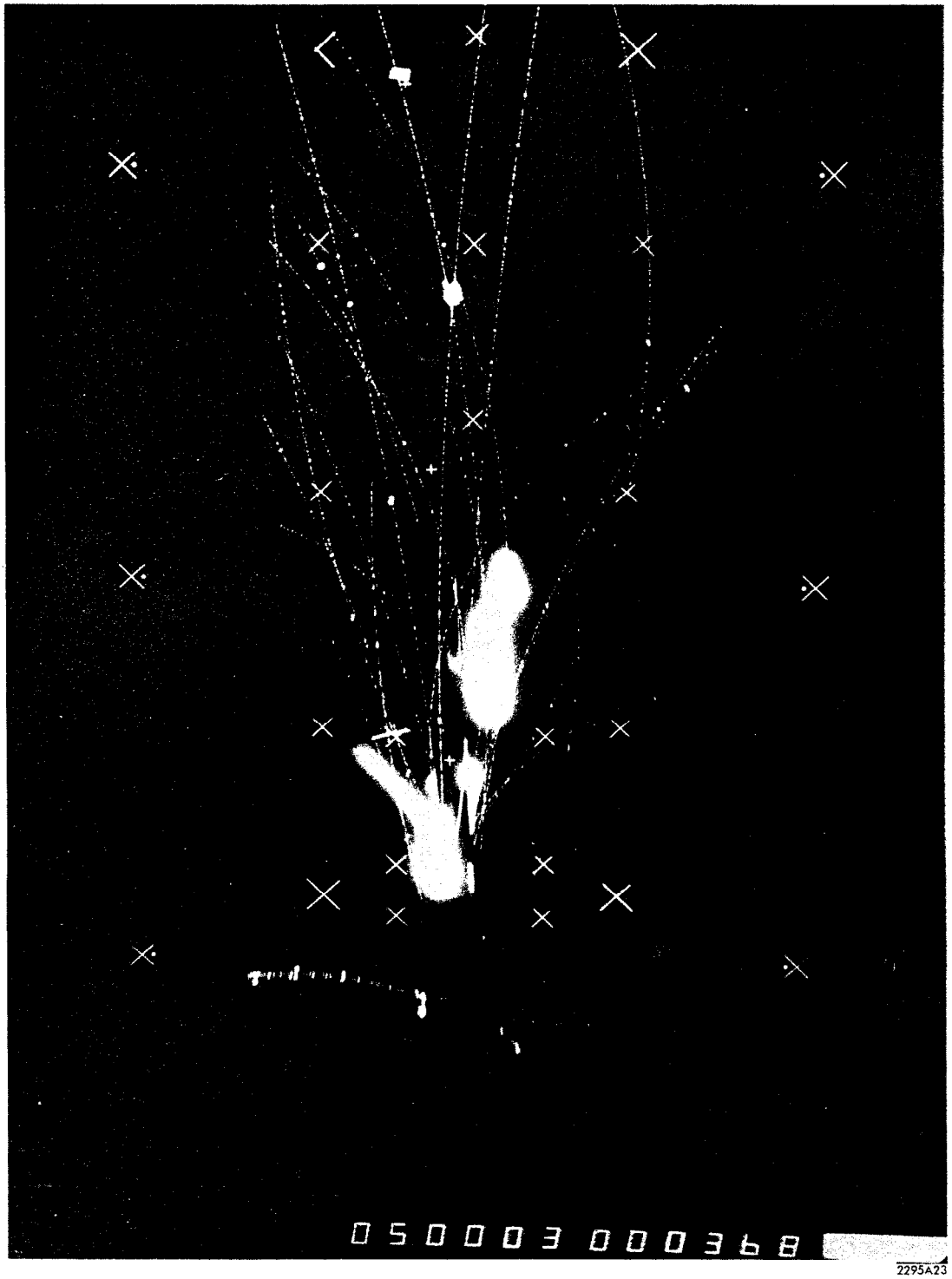

2295A23

FIG. 3--Event photographed on SO265. The center discharged covers a good fraction of the center region.

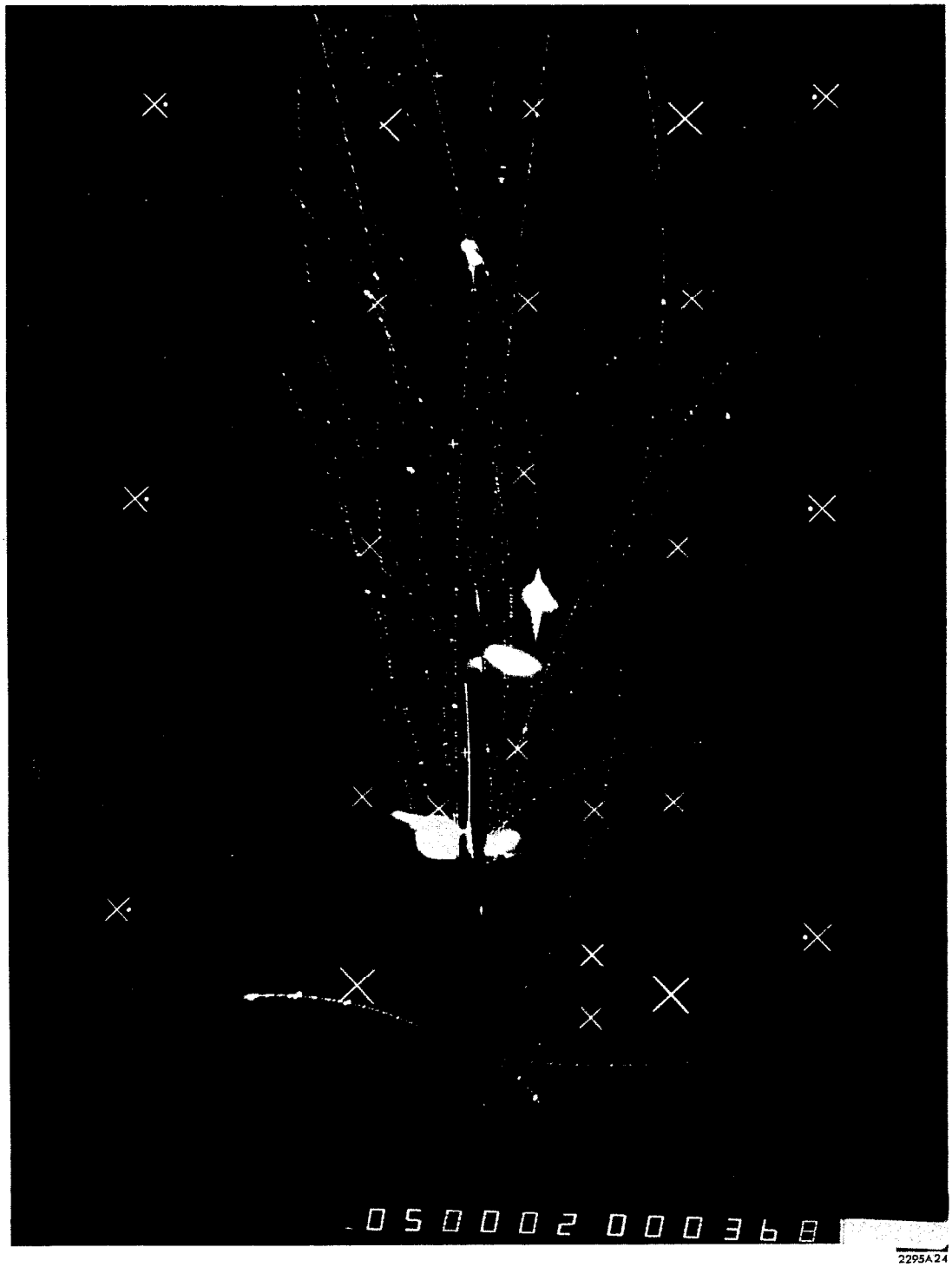

FIG. 4--The same event as shown in Fig. 3, photographed with SO121.

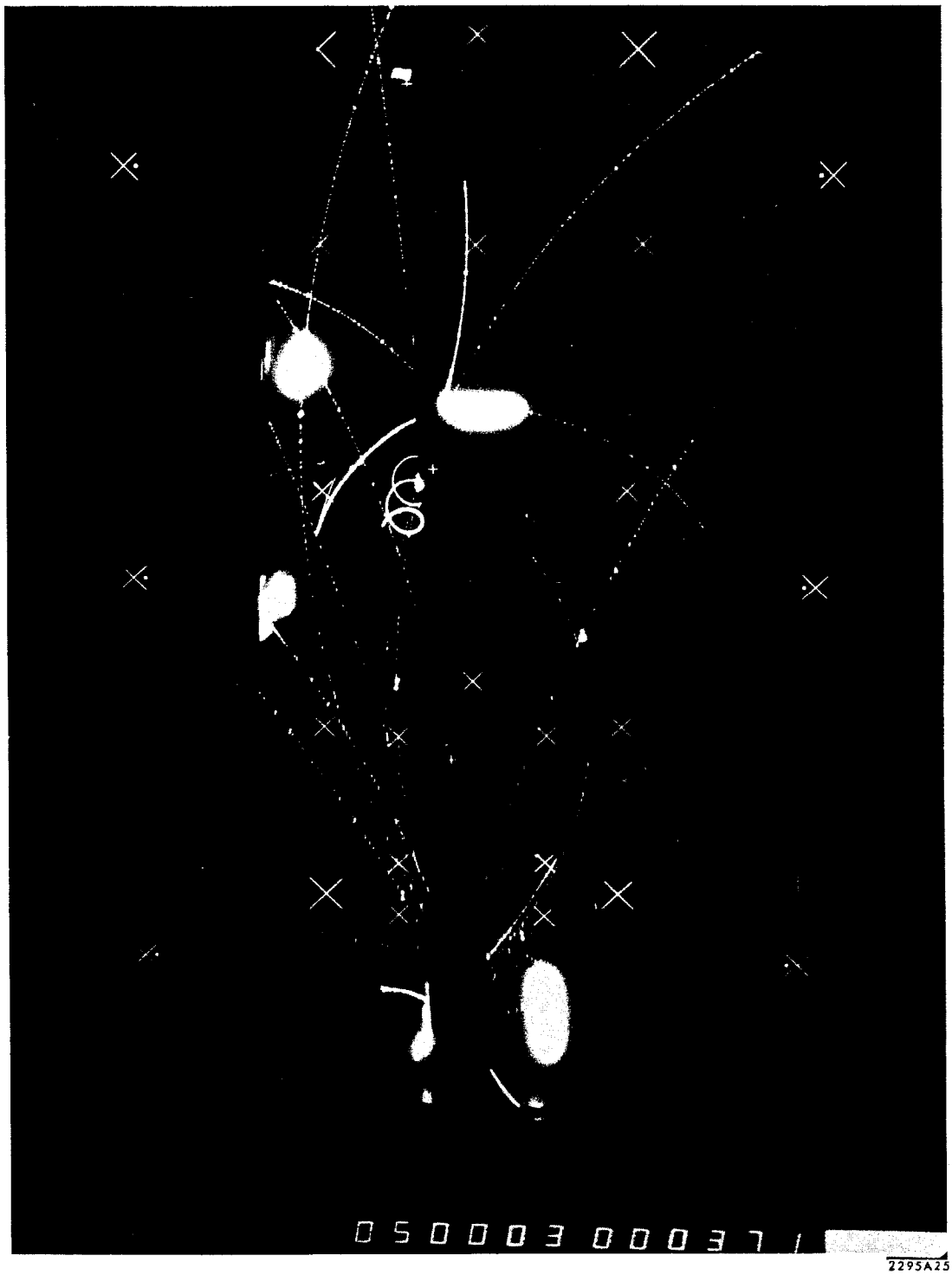

2295A25

FIG. 5--Event photographed on SO265. This event shows the response of two films (see Fig. 6) to steep tracks.

2296A26

FIG. 6--The same event as shown in Fig. 5, photographed with SO121.

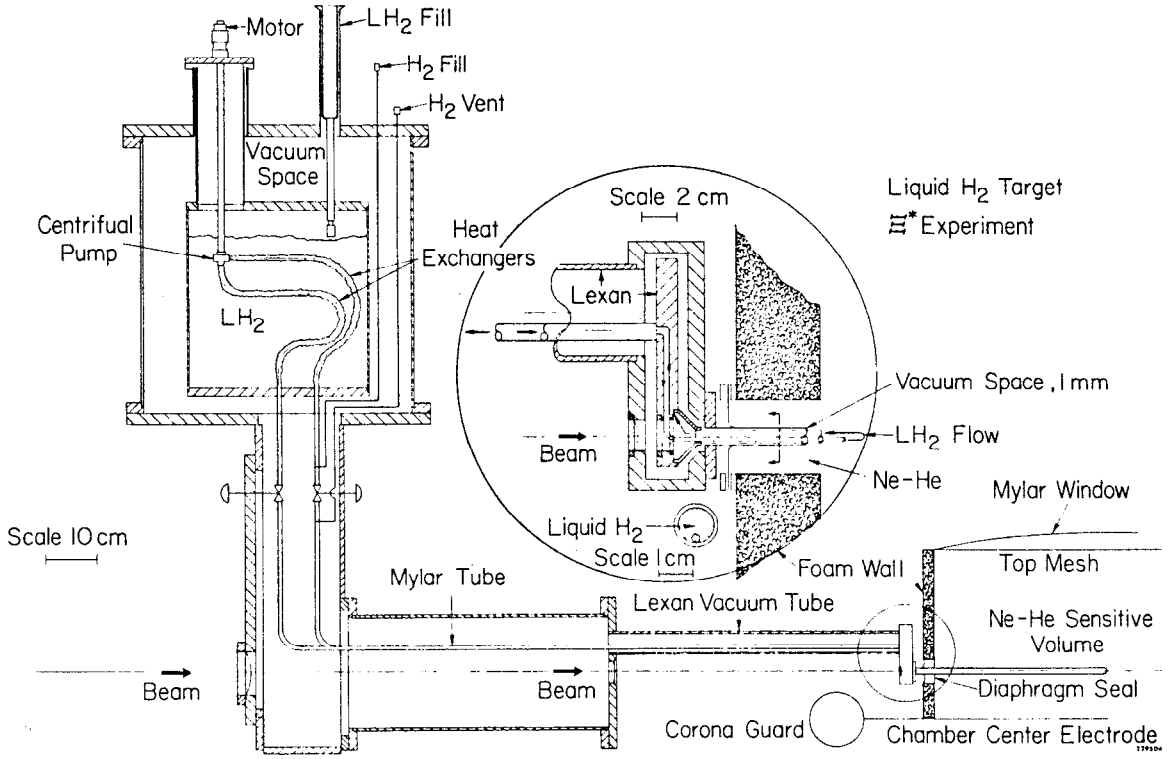

FIG. 7--Liquid hydrogen target used in the $K^-p \rightarrow \Xi^*$ experiment.

~4°K, and the return temperature was kept ~2°K below boiling. Although liquid hydrogen targets have been operating inside the streamer chamber for quite some time, this one is the first to allow such a close look at the interaction region.

ACCURACY OF THE STREAMER CHAMBER

During a preliminary analysis of the Ξ^* experiment, a great deal of attention has been devoted to the understanding of the systematic and random errors. The experimental setup (Fig. 8) consists of the liquid H_2 target already mentioned inside a chamber 2 × .8 × .6 m, surrounded by a hodoscope of 68 counters. The chamber is in the 2 m diameter magnet with a 17 kG field (see Figs. 9, 10). A picture is taken when the hodoscope registers at least 5 charged

FIG. 8--Trigger counter configuration, Ξ^* experiment.

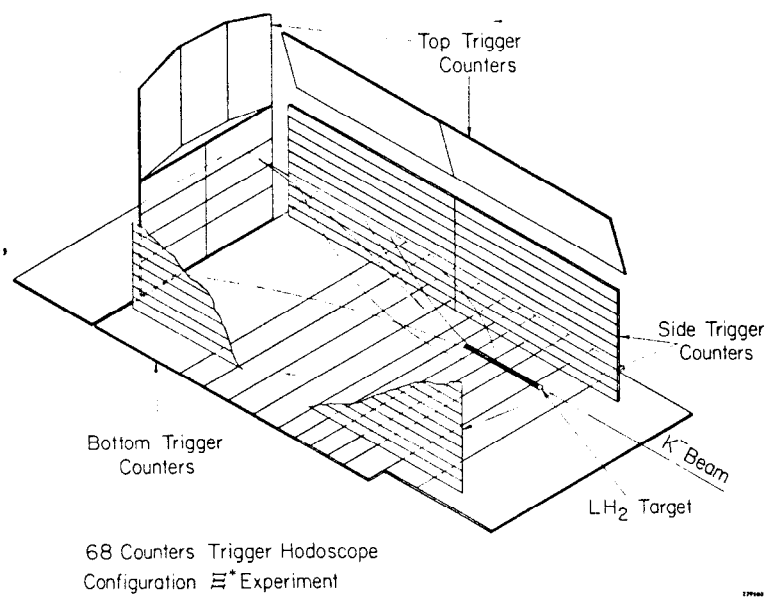

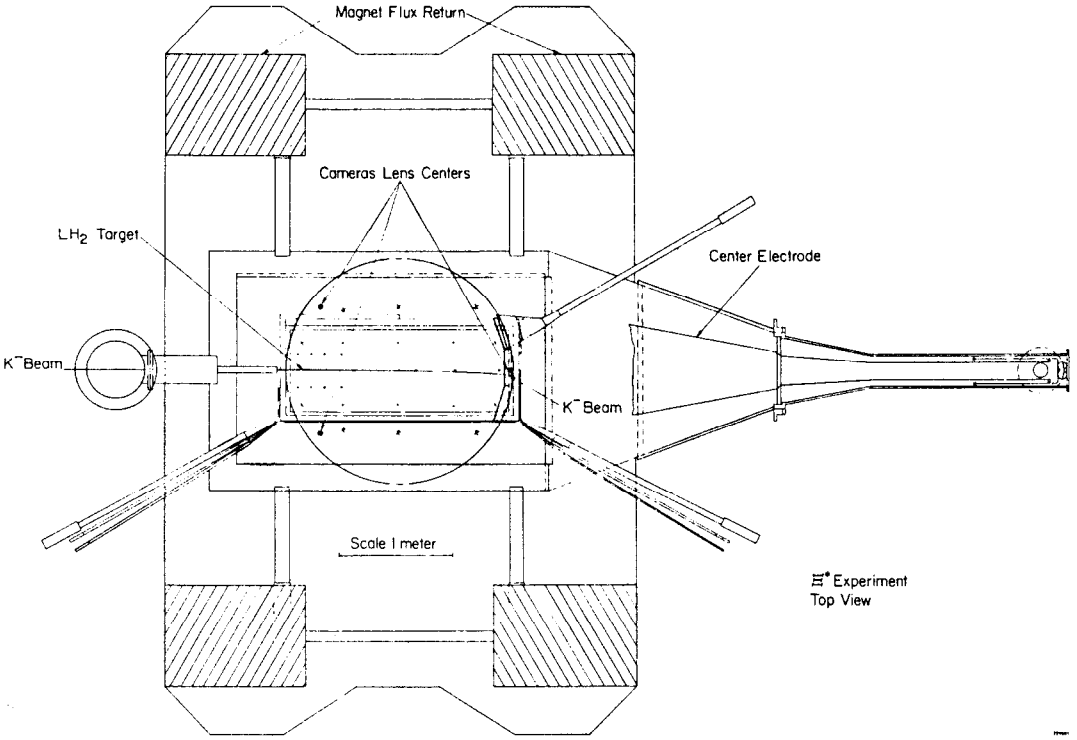

FIG. 9--Top view of the Ξ^* experimental setup. For simplicity not all counters are drawn.

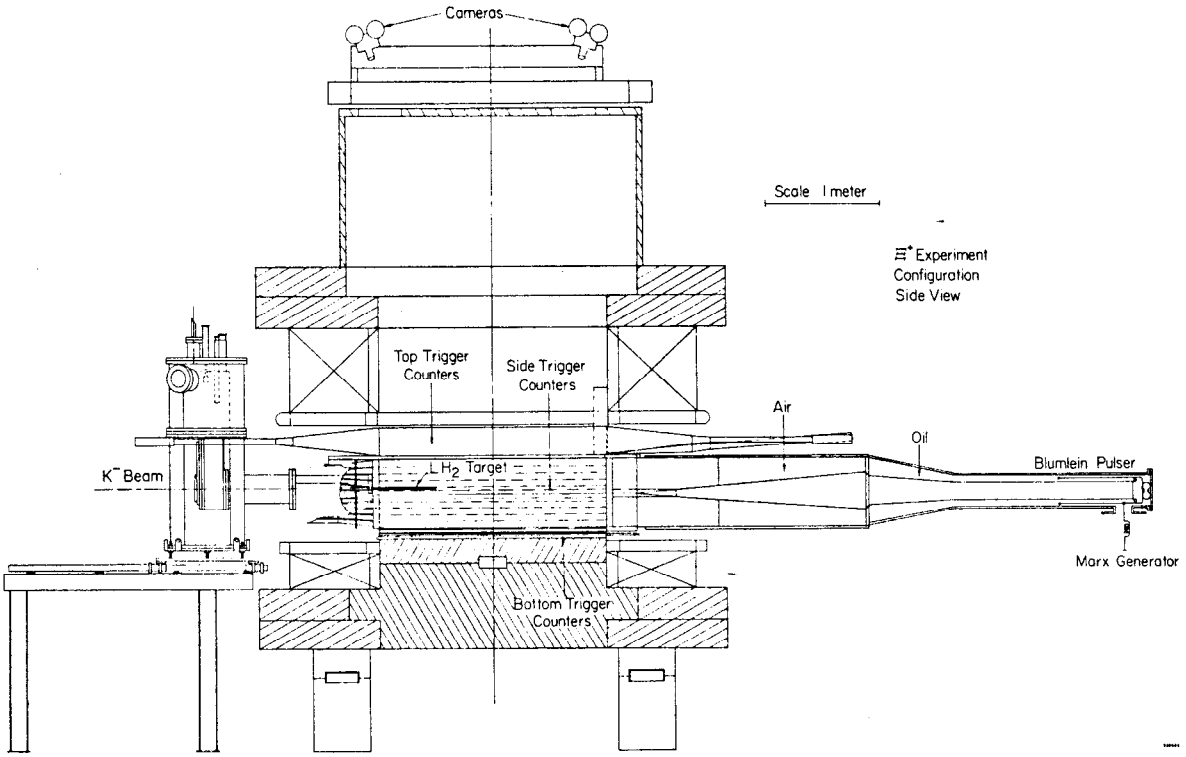

FIG. 10--Side view of the Ξ^* experimental setup. Notice the tilted camera axis. In this manner we have eliminated vignetting and vastly reduced the lens distortion correction.

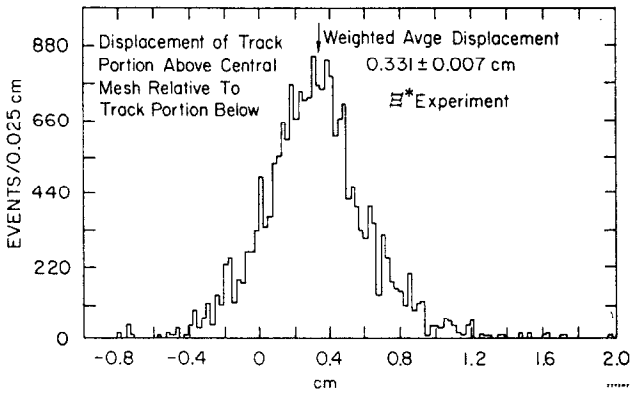

FIG. 11--Displacement of track portion above central mesh relative to track portion below.

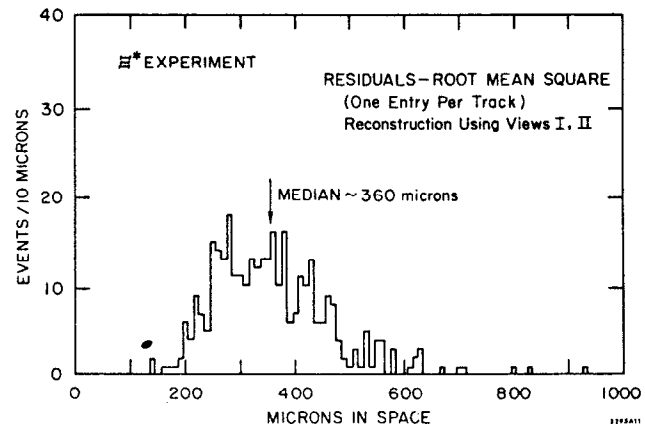

FIG. 12--Residuals root mean square, Ξ* experiment.

particles outgoing in coincidence with an incoming K^-. With this trigger we are able to see ~89% of the analyzable Ξ's produced. The exposure (not corrected for decay losses in the target) is ~190 eV/μb.

The first source of systematic error removed was a coherent drift, in the direction of the electric field; this drift is present because the voltage applied to the chamber has a prepulse whose $\int$Edt is equal to the $\int$Edt of the main high voltage pulse, and of opposite sign; the drift velocity of electrons goes as $\sqrt{E}$, and the prepulse will drift electrons more than the main pulse. This displacement could be eliminated by hardware means, charging the Blumlein line as a balanced bridge;[1] but it is much simpler to measure it a posteriori and use the displacement value (in our case .331 cm, see Fig. 11) as a correction in the reconstruction programs.

Another effect was found by plotting the deviations between measured and fitted coordinates in function of the distance from the center. A rather conspicuous increase in deviation was noticed for points measured within 1-2 cm from the mesh. We attribute this increase to the effect of the electrode on the streamer's growth; i.e., since streamers cannot grow across the mesh, the center of the visible streamer will be displaced away from it. The problem is eliminated by deleting points within 2 cm from the mesh during the reconstruction of tracks.

After removing these effects we look at the residual RMS and we find about 360 microns in space (Fig. 12). In the Argonne streamer chamber[2] (Fig. 13) the setting error is about 260 μ, without correction for systematic effects. In an earlier experiment at SLAC (K_L^0 decay, Fig. 14), the best measurer had a setting error of 460 μ. In the same experiment an automatic measuring machine

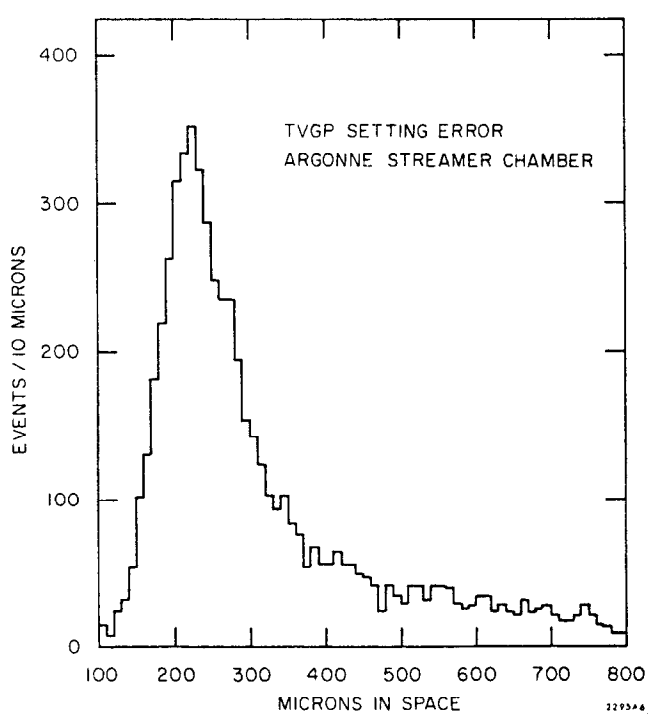

FIG. 13--Residuals root mean square, Argonne streamer chamber.

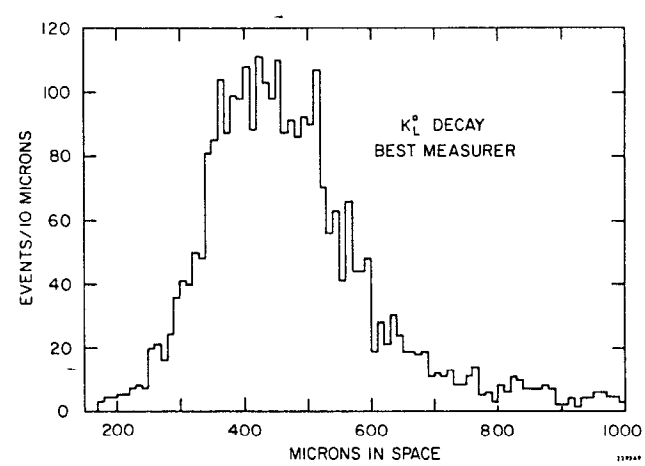

FIG. 14--Residuals root mean square as obtained by our best measurer. Different measurers have different setting errors, the worst one being about a factor of two less accurate.

(Hummingbird) measured $\sim 210^4$ decays, with a setting error of $\sim 400\ \mu$. The last two setting errors come from a different reconstruction program (not TVGP) and pictures were taken with somewhat worse optical systems. In a very old paper[3] we had a RMS deviation of 140 μ for straight tracks, without magnetic field. These errors do look very different, but when divided by the demagnification of the optics they end up as a rather constant 5 μ on film (Fig. 15). This observation strongly suggests that the so-called setting error in streamer chambers has very little to do with the effective RMS scatter of the tracks, but is rather a measurement of the "noise" of the film used, (the same for all points with the exception of the one from Ref. 3). Looking back at Fig. 1 and at the scale, it is not surprising that one cannot reach an accuracy better than 5 μ on film. If the measurements are limited by film noise, then the new film SO121 should show an improvement, since it has better resolution and smaller grain. Measurements on the new film are in progress.

However, in spite of the larger setting error, the streamer chamber is a more accurate detector than a bubble chamber of similar size. To estimate the errors $\Delta p/p$ and $\Delta\theta$ for the two detectors, one can use formulas[4] which, simplified for flat tracks, and with some trivial arithmetic become:

$$\left(\frac{\Delta p}{p}\right)^2 = \frac{A}{H^2\ell} + \frac{1.4\times 10^{-4}\, p^2 \epsilon^2}{H^2 \ell^5}$$

$$(\Delta\theta)^2 = \frac{B\ell}{p} + \frac{3.8\times 10^{-6}\, \epsilon^2}{\ell^3}$$

The units are

H in kG

p, momentum in MeV/c

setting error ϵ in microns

ℓ track length in cm .

$$\left.\begin{array}{l} A = 2.7 \\ B = 4.0\times 10^{-2} \end{array}\right\} \text{for bubble chambers}$$

$$\left.\begin{array}{l} A = .09 \\ B = .13\times 10^{-2} \end{array}\right\} \text{for Ne He streamer chamber}$$

The first term is the multiple scattering contribution, the second is due to measurement errors. These formulas are plotted in Fig. 16, together with a third hypothetical 3 m long (2.5 m useful track), 1 m wide streamer chamber comfortably located in the CERN Ω project magnet, with a setting error of 200 μ (i.e., assuming a demagnification of 40, which will fit 35 mm format if the chamber is 1 m wide).

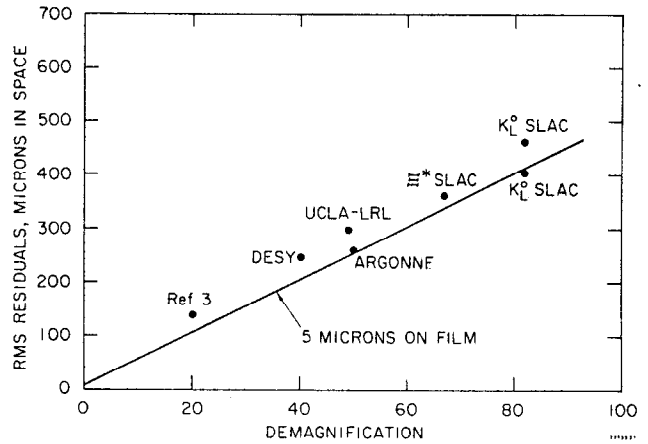

FIG. 15--Demagnification versus quoted setting error. The two points for K_L^0 SLAC are one from manual measurements and the other from automatic measuring machine (Hummingbird).

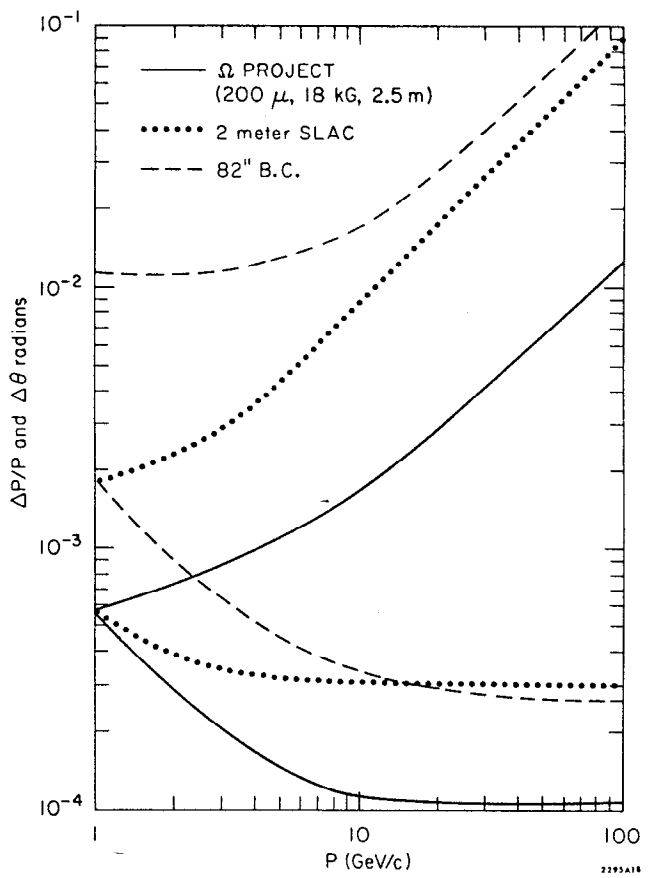

FIG. 16--Comparison of the calculated momentum and angular errors in streamer chamber and bubble chamber.

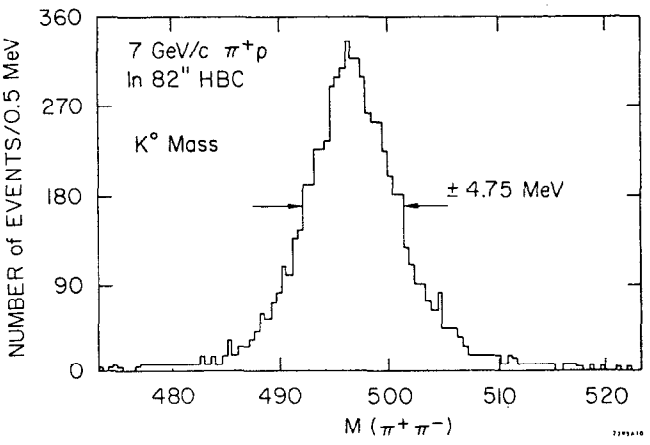

FIG. 17--K^0 mass distribution in the 82-in. hydrogen bubble chamber.

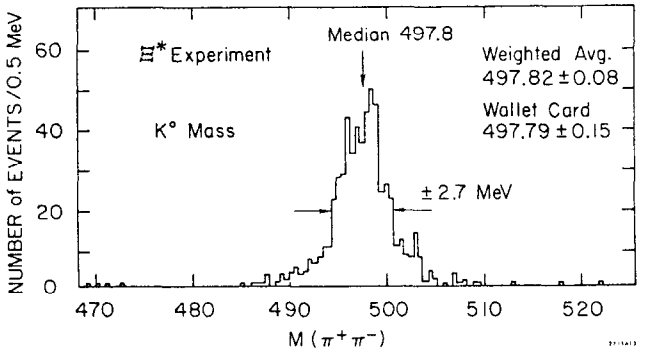

FIG. 18--K^0 mass distribution in the Ξ* experiment. The Brookhaven double V magnetic spectrometer (Ref. 9) quotes a resolution of ± 2.8 MeV.

The higher accuracy in momentum and angle reflects in narrower widths for the K^0 mass distribution: Figs. 17 and 18 show the comparison between the K^0 width in the bubble chamber and streamer chamber. The K^0 momentum spectrum of the two samples was roughly the same. Figure 9 shows the distribution of the errors on the mass from the same two experiments. Finally, Figs. 20 and 21 show the Λ and Ξ mass distribution respectively.

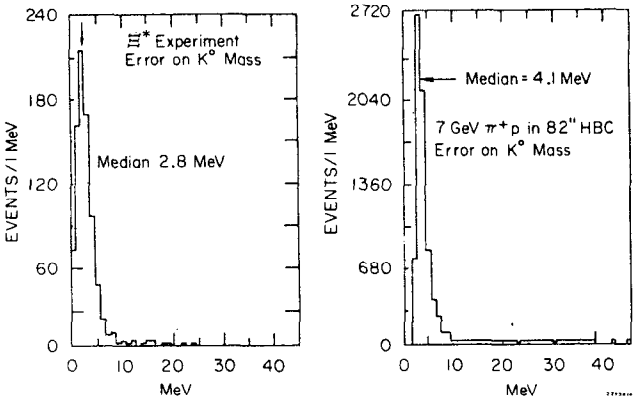

FIG. 19--Error in the K^0 mass from Ξ* experiment and in the bubble chamber.

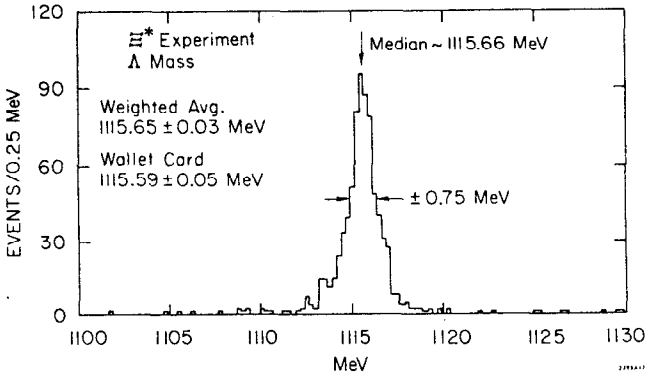

FIG. 20--Λ mass distribution, Ξ* experiment.

WHAT IS NEXT?

There is very little room left for improvements in the high voltage pulsing system. The combination Marx generator plus Blumlein has shown reliability in excess of 2.5×10^6 pulses without failure with a pulse height stability (short term $\sim 5 \times 10^5$ pulses) better than 1%. Perhaps shorter (less than 5 ns FWHM) pulses may help to reduce the brightness ratio between sparks and streamers; some reduction in spark size on film could be achieved also by increasing the mesh electrodes transparency, and by reducing their reflectivity to an absolute minimum. Chambers can be built in odd shapes to fit experimental requirements;[4] counters, high Z plates, liquid H_2 targets can be inserted inside the electric field, or even inside the sensitive volume of the chamber;[5,6] other not yet dreamed of configurations will be developed depending upon the requirements dictated by future streamer chamber users.

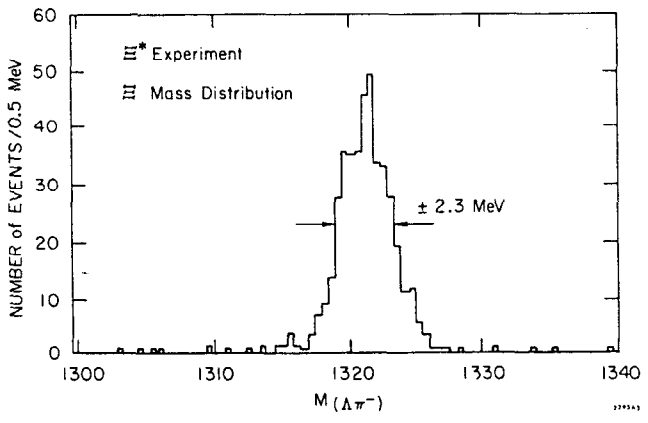

FIG. 21--Ξ mass distribution, Ξ* experiment.

Some effort is now directed towards filmless streamer chambers, either by using very sensitive TV tubes[7] or by solid state cameras. Solid state cameras are now at a level of 400 × 450 photodiodes,[8] self scanned, with sensitivity perhaps one order of magnitude better than silicon target vidicons. These sensors are completely unaffected by magnetic fields, and do not need analog to digital conversion. It is our opinion, however, that the main problem with a filmless streamer chamber is in the software that such a device will require, unless one looks at topologically simple events. In this case wire chamber (proportional or otherwise), might be a better alternative.

CONCLUSIONS

The streamer chamber has been proven as a very versatile, very productive instrument. The absence of multiple scattering and the low density of its medium makes it extremely accurate, and therefore particularly attractive at the energies available at NAL or at the future European 300 (?) GeV accelerator. In fact a 3 m 18 kG magnet plus streamer chamber will have sufficient accuracy for energies up to 100 GeV, without need of downstream "hybrid" accessory detectors.

ACKNOWLEDGEMENTS

It is a pleasure to acknowledge the painstaking efforts of the SLAC, LRL, University of California at Riverside collaboration during the Ξ^* experiment. My special thanks to Frank Solmitz for providing clear and critical results from the analysis of that experiment.

REFERENCES

1. F. Bulos, A. Odian, F. Villa, D. Yount, Report No. SLAC-74, Stanford Linear Accelerator Center (1967); unpublished, p. 86.
2. P. V. Sokolsky, "Observation of backward meson production in πp interaction at 8 GeV/c in a streamer chamber," thesis, University of Illinois, Urbana (1973); unpublished.
3. F. Bulos, A. Boyarsky, R. Diebold, A. Odian, B. Richter, F. Villa, "Streamer chamber development," Invited paper at the 5th International Conference on High Energy Accelerators, Frascati, Italy, September 1965.
4. C. M. Fisher, "Optimization of bubble chamber design parameter: Measuring accuracies for charged particles," CERN 67-26 Vol. I (1967); p. 25.
5. V. Eckardt, H.-J. Gebauer, R. Meinke, O. R. Sander, "Recent development in streamer chamber technology," paper submitted to this conference.
6. K. Bunnell, R. F. Mozley, A. Odian, F. Villa, L. C. Wang, "Performance of the SLAC streamer chamber," paper presented at the Argonne Streamer Chamber Conference, Argonne, 1972 (to be published).
7. M. Severi, "Possibility of recording streamer chamber tracks with a TV system," paper presented at this conference.
8. D. L. Farnsworth, C. T. Huggins, E. L. Irwin, "TV resolution solid state camera," 1972 Government Microcircuit Applications Conference (sponsored by N.A.S.A.), San Diego, 1972.
   D. F. Farnsworth, Westinghouse Defense and Space Center, private communication.
9. K. J. Foley, W. A. Love, S. Ozaki, E. D. Platner, A. C. Saulys, E. H. Willen, S. J. Lindenbaum, "The Brookhaven double VEE spectrometer," BNL 17421, C-2.