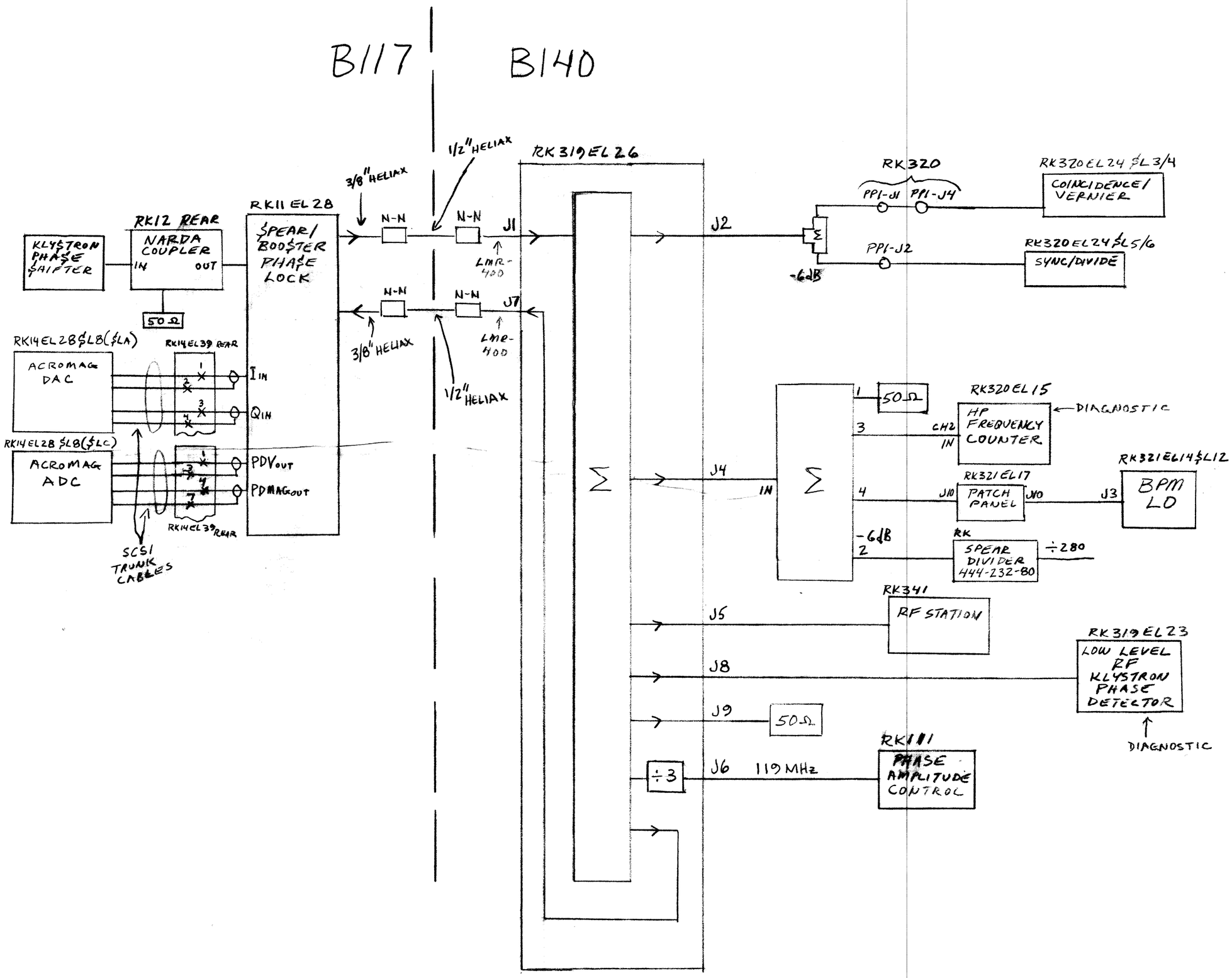
B117
B140
KLYSTRON PHASE SHIFTER
RK12 REAR
NARDA COUPLER
IN
OUT
50 Ω
RK11 EL28
SPEAR/ BOOSTER PHASE LOCK
3/8" HELIAX
1/2" HELIAX
N-N
J1
J7
LMR-400
RK319 EL26
J2
J4
J5
J8
J9
J6
119 MHz
÷3
RK320
PPI-J1
PPI-J4
PPI-J2
-6dB
RK320 EL24 SL3/4
COINCIDENCE/ VERNIER
RK320 EL24 SL5/6
SYNC/DIVIDE
RK14 EL28 SL8(SLA)
ACROMAG DAC
RK14 EL39 REAR
I IN
Q IN
RK14 EL28 SL8(SLC)
ACROMAG ADC
PDV OUT
PDMAG OUT
SCSI TRUNK CABLES
RK320 EL15
HP FREQUENCY COUNTER
CH2 IN
DIAGNOSTIC
RK321 EL17
PATCH PANEL
J10
RK321 EL14 SL12
BPM LO
J3
RK
SPEAR DIVIDER 444-232-80
÷280
RK341
RF STATION
RK319 EL23
LOW LEVEL RF KLYSTRON PHASE DETECTOR
RK111
PHASE AMPLITUDE CONTROL