REV	DESCRIPTION	DFTR	CHKR	ENGR APPV	DATE

MCOR 30 MOTHER BOARD
TO DAUGHTER BOARD
INTERCONNECTS

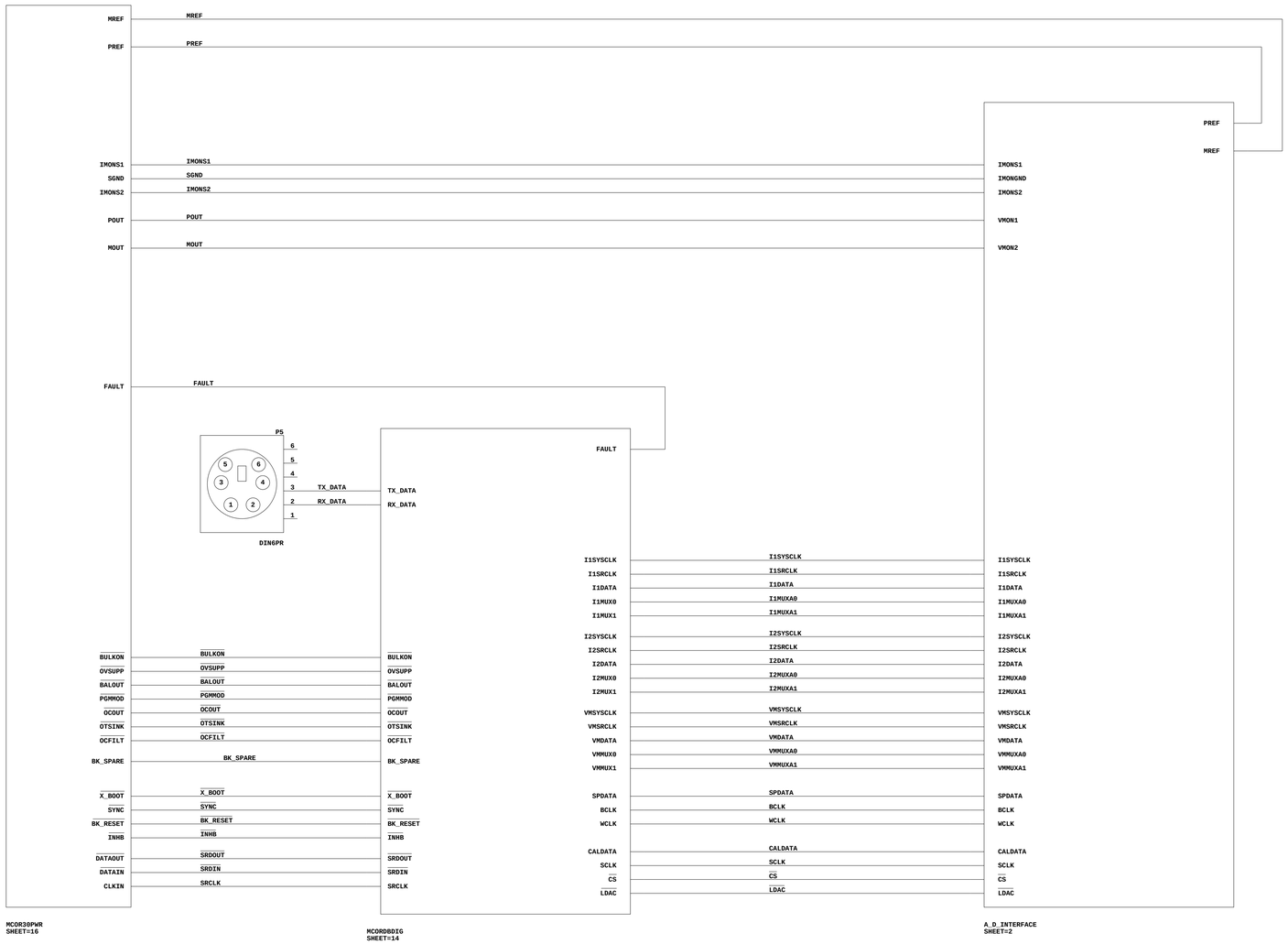

MISC
HARDWARE

MCOR30DB
SHEET=17

FILENAME:MCOR30DB
DATE: 8-20-2002_10:59

STANFORD LINEAR ACCELERATOR CENTER
U.S. DEPARTMENT OF ENERGY
STANFORD UNIVERSITY STANFORD, CALIFORNIA

PROPRIETARY DATA OF STANFORD UNIVERSITY AND/OR U.S. DEPARTMENT OF ENERGY. RECIPIENT SHALL NOT PUBLISH THE INFORMATION WITHIN UNLESS GRANTED SPECIFIC PERMISSION OF STANFORD UNIVERSITY.

		DATE	APPROVALS
ENGR	E. MEDVEDKO		
ENGR	J. OLSEN		
DFTR	B. NORIEGA		
CHKR			

SHEET 1 OF 17

SPEAR III

CANDI

CONTROLLER ANALOG
DIGITAL INTERFACE

D

REV	DESCRIPTION	DFTR	CHKR	ENGR APPV	DATE

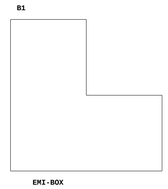

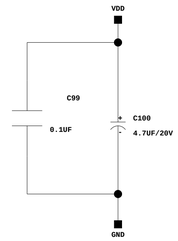

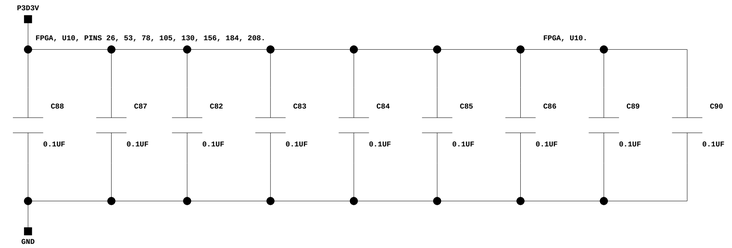

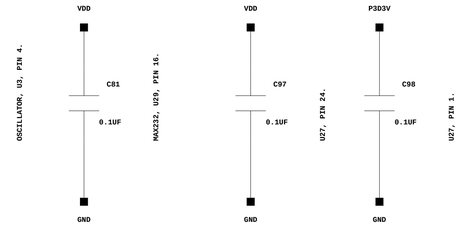

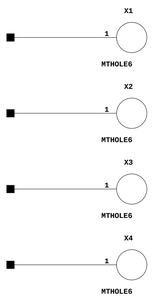

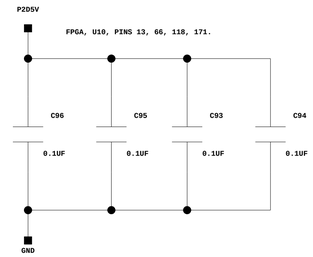

FILENAME:MCORDBMISC

DATE: 8-23-2002_10:33

STANFORD LINEAR ACCELERATOR CENTER
U.S. DEPARTMENT OF ENERGY
STANFORD UNIVERSITY STANFORD, CALIFORNIA

PROPRIETARY DATA OF STANFORD UNIVERSITY AND/OR U.S. DEPARTMENT OF ENERGY. RECIPIENT SHALL NOT PUBLISH THE INFORMATION WITHIN UNLESS GRANTED SPECIFIC PERMISSION OF STANFORD UNIVERSITY.

		DATE	APPROVALS
ENGR	E. MEDVEDKO		
ENGR	J. OLSEN		
DFTR	B. NORIEGA		
CHKR			

SHEET 17 OF 17

SPEAR III

CANDI

CONTROLLER ANALOG
DIGITAL INTERFACE

D

REV	DESCRIPTION	DFTR	CHKR	ENGR APPV	DATE

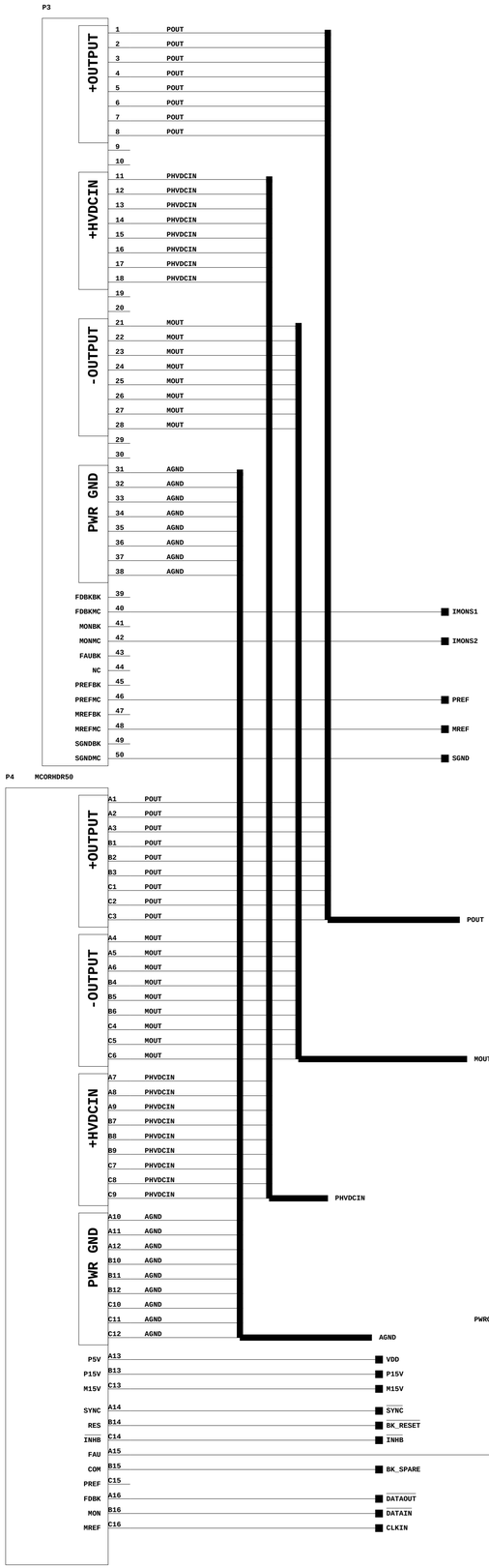

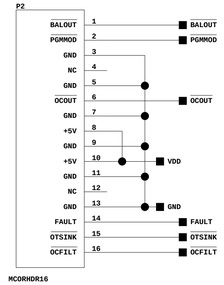

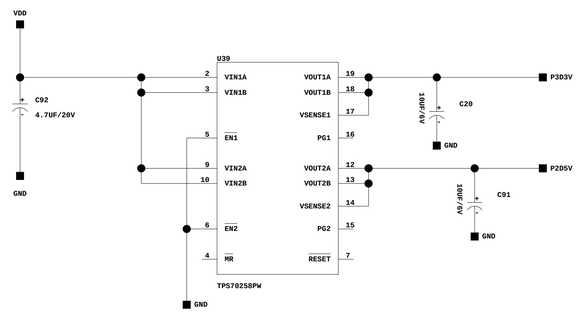

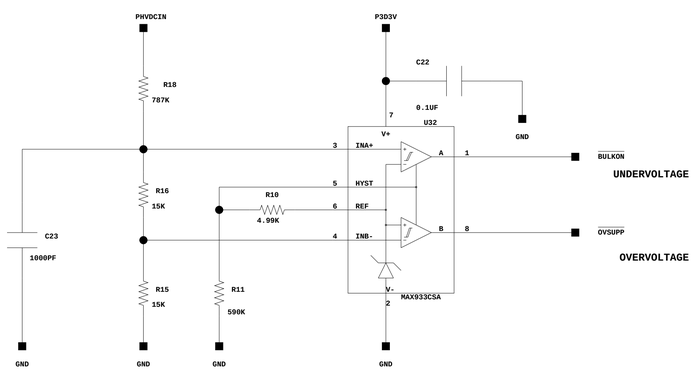

Fc = 5.5 kHz
Time constant 28.9 microseconds

PHVDCIN 60 V NOMINAL; 60 V TO 65 V - OVERVOLTAGE

0 V TO 32 V - UNDERVOLTAGE

PWRGND - ANALOG GROUND.

INSTALL JUMER TO ENABLE
XILINX RE-BOOT FROM FRANKENBOARD

X_BOOT IS OPEN DRAIN!

FILENAME:MCOR30PWR
DATE: 9-26-2002_16:41

STANFORD LINEAR ACCELERATOR CENTER
U.S. DEPARTMENT OF ENERGY
STANFORD UNIVERSITY STANFORD, CALIFORNIA

PROPRIETARY DATA OF STANFORD UNIVERSITY AND/OR U.S. DEPARTMENT OF ENERGY. RECIPIENT SHALL NOT PUBLISH THE INFORMATION WITHIN UNLESS GRANTED SPECIFIC PERMISSION OF STANFORD UNIVERSITY.

		DATE	APPROVALS
ENGR	E. MEDVEDKO		
ENGR	J. OLSEN		
DFTR	B. NORIEGA		
CHKR			

SHEET 16 OF 17

SPEAR III

CANDI

CONTROLLER ANALOG
DIGITAL INTERFACE

D

REV	DESCRIPTION	DFTR	CHKR	ENGR APPV	DATE

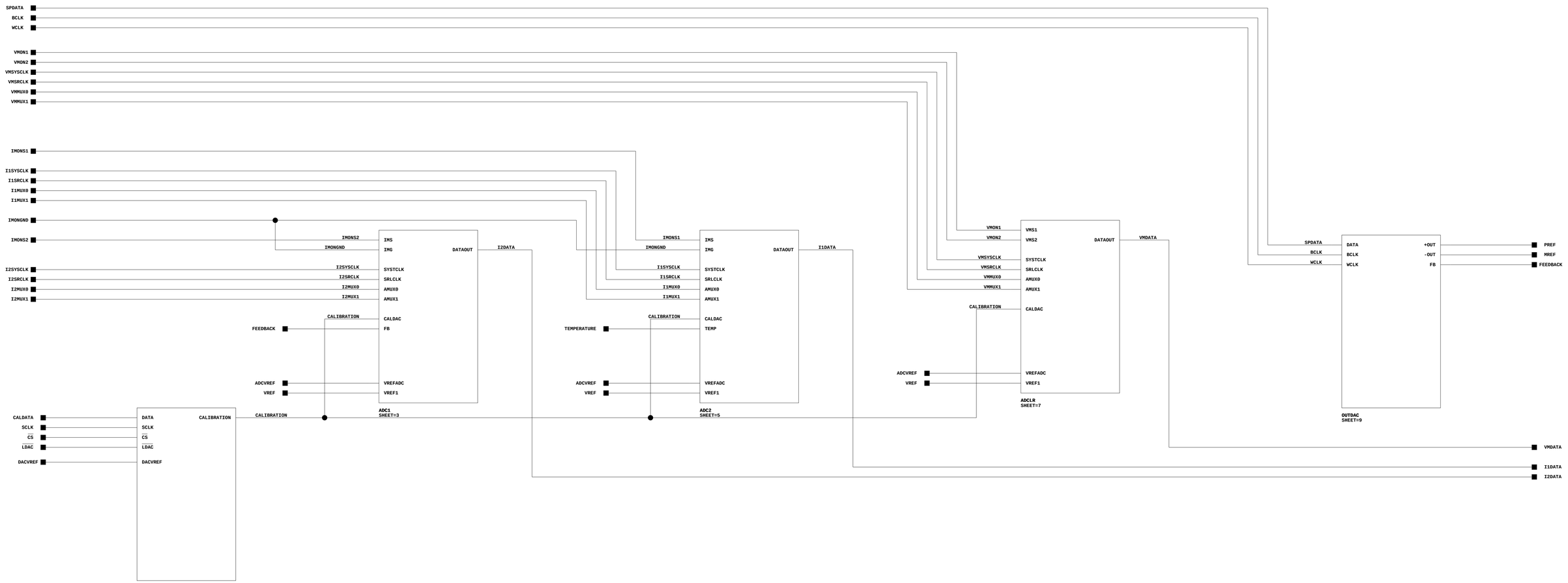

FILENAME:A_D_INTERFACE

DATE: 8-20-2002_11:54

STANFORD LINEAR ACCELERATOR CENTER
U.S. DEPARTMENT OF ENERGY
STANFORD UNIVERSITY STANFORD, CALIFORNIA

PROPRIETARY DATA OF STANFORD UNIVERSITY AND/OR U.S. DEPARTMENT OF ENERGY. RECIPIENT SHALL NOT PUBLISH THE INFORMATION WITHIN UNLESS GRANTED SPECIFIC PERMISSION OF STANFORD UNIVERSITY.

		DATE	APPROVALS
ENGR	E. MEDVEDKO		
ENGR	J. OLSEN		
DFTR	B. NORIEGA		
CHKR			

SHEET 2 OF 17

SPEAR III

CANDI

CONTROLLER ANALOG
DIGITAL INTERFACE

D

REV	DESCRIPTION	DFTR	CHKR	ENGR APPV	DATE

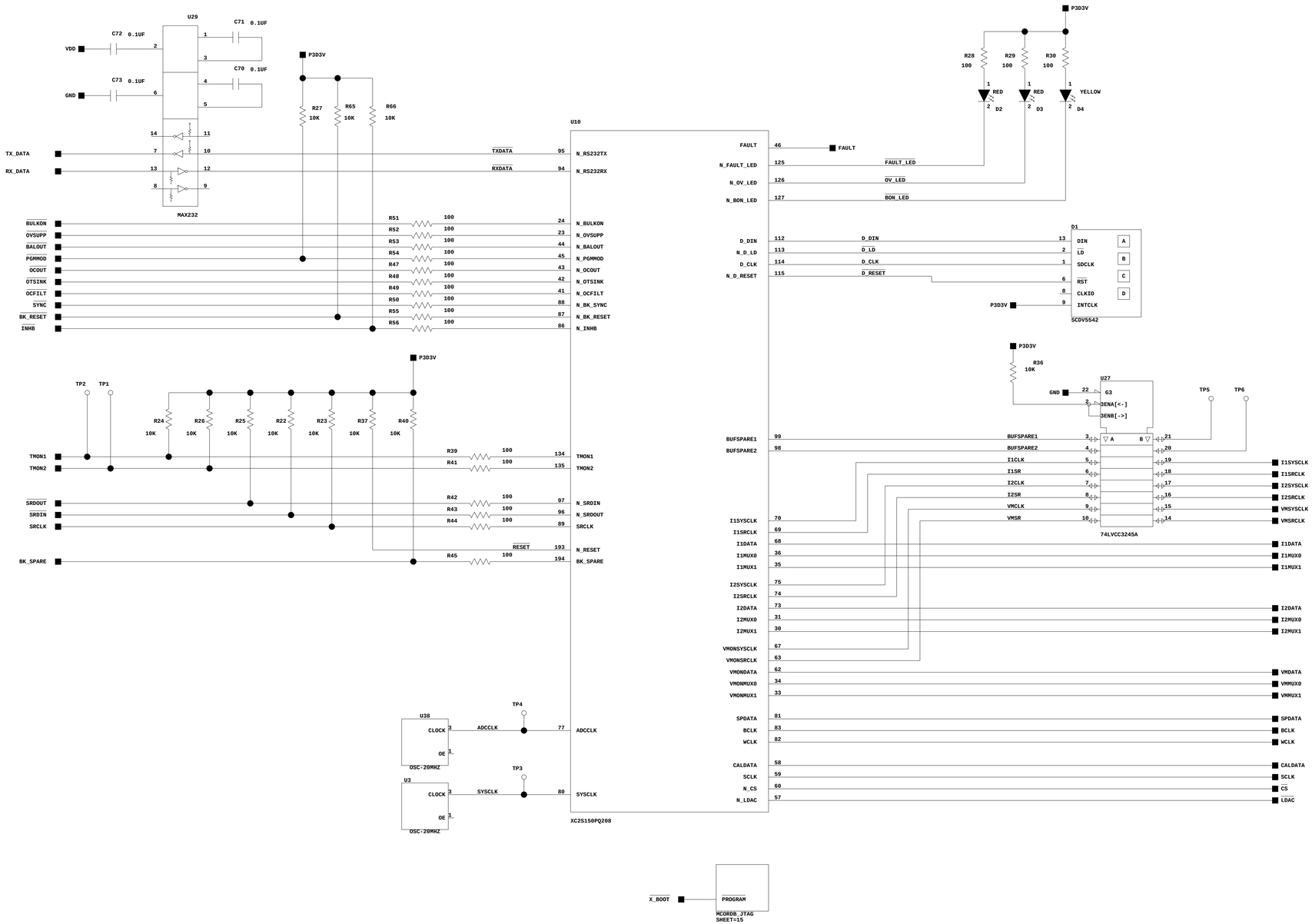

FILENAME:MCORDBDIG

DATE: 11-14-2002_15:56

STANFORD LINEAR ACCELERATOR CENTER

U.S. DEPARTMENT OF ENERGY

STANFORD UNIVERSITY STANFORD, CALIFORNIA

PROPRIETARY DATA OF STANFORD UNIVERSITY AND/OR U.S. DEPARTMENT OF ENERGY. RECIPIENT SHALL NOT PUBLISH THE INFORMATION WITHIN UNLESS GRANTED SPECIFIC PERMISSION OF STANFORD UNIVERSITY.

		DATE	APPROVALS
ENGR	E. MEDVEDKO		
ENGR	J. OLSEN		
DFTR	B. NORIEGA		
CHKR			

SPEAR III

CANDI

CONTROLLER ANALOG DIGITAL INTERFACE

D

REV	DESCRIPTION	DFTR	CHKR	ENGR APPV	DATE

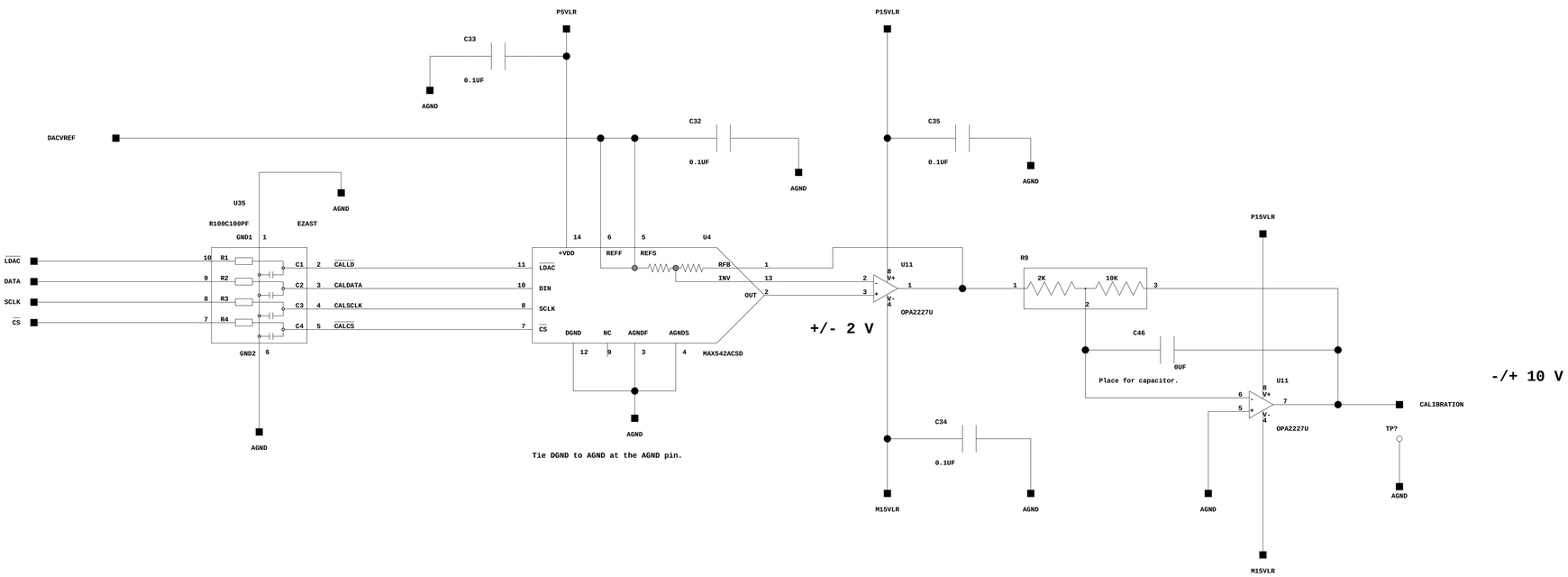

FILENAME:CALDAC

DATE: 9-26-2002_15:41

STANFORD LINEAR ACCELERATOR CENTER
U.S. DEPARTMENT OF ENERGY
STANFORD UNIVERSITY STANFORD, CALIFORNIA

PROPRIETARY DATA OF STANFORD UNIVERSITY AND/OR U.S. DEPARTMENT OF ENERGY. RECIPIENT SHALL NOT PUBLISH THE INFORMATION WITHIN UNLESS GRANTED SPECIFIC PERMISSION OF STANFORD UNIVERSITY.

		DATE	APPROVALS
ENGR	E. MEDVEDKO		
ENGR	J. OLSEN		
DFTR	B. NORIEGA		
CHKR			

SHEET 11 OF 17

SPEAR III

CANDI

CONTROLLER ANALOG
DIGITAL INTERFACE

D

REV	DESCRIPTION	DFTR	CHKR	ENGR APPV	DATE

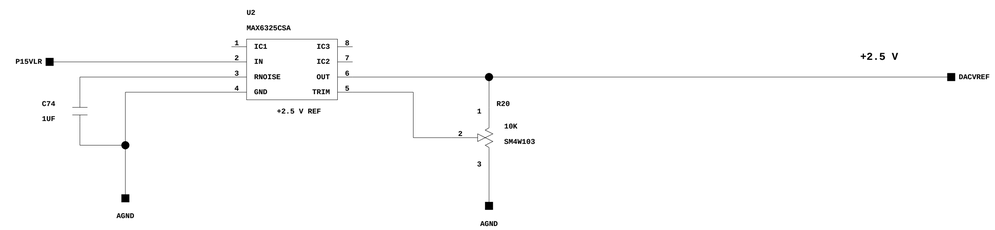

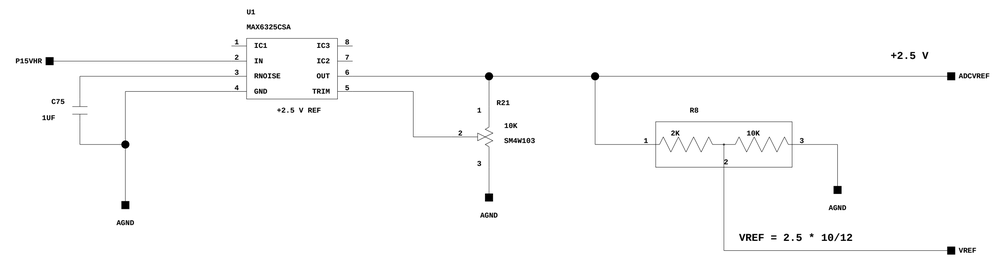

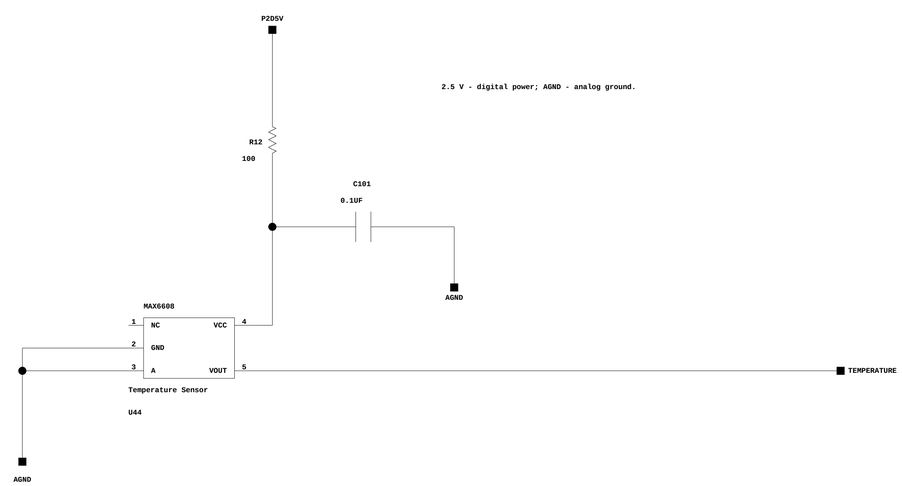

FILENAME:REFV

DATE: 8-30-2002_13:39

STANFORD LINEAR ACCELERATOR CENTER
U.S. DEPARTMENT OF ENERGY
STANFORD UNIVERSITY STANFORD, CALIFORNIA

PROPRIETARY DATA OF STANFORD UNIVERSITY AND/OR U.S. DEPARTMENT OF ENERGY. RECIPIENT SHALL NOT PUBLISH THE INFORMATION WITHIN UNLESS GRANTED SPECIFIC PERMISSION OF STANFORD UNIVERSITY.

		DATE	APPROVALS
ENGR	E. MEDVEDKO		
ENGR	J. OLSEN		
DFTR	B. NORIEGA		
CHKR			

SPEAR III

CANDI

CONTROLLER ANALOG
DIGITAL INTERFACE

D

REV	DESCRIPTION	DFTR	CHKR	ENGR APPV	DATE

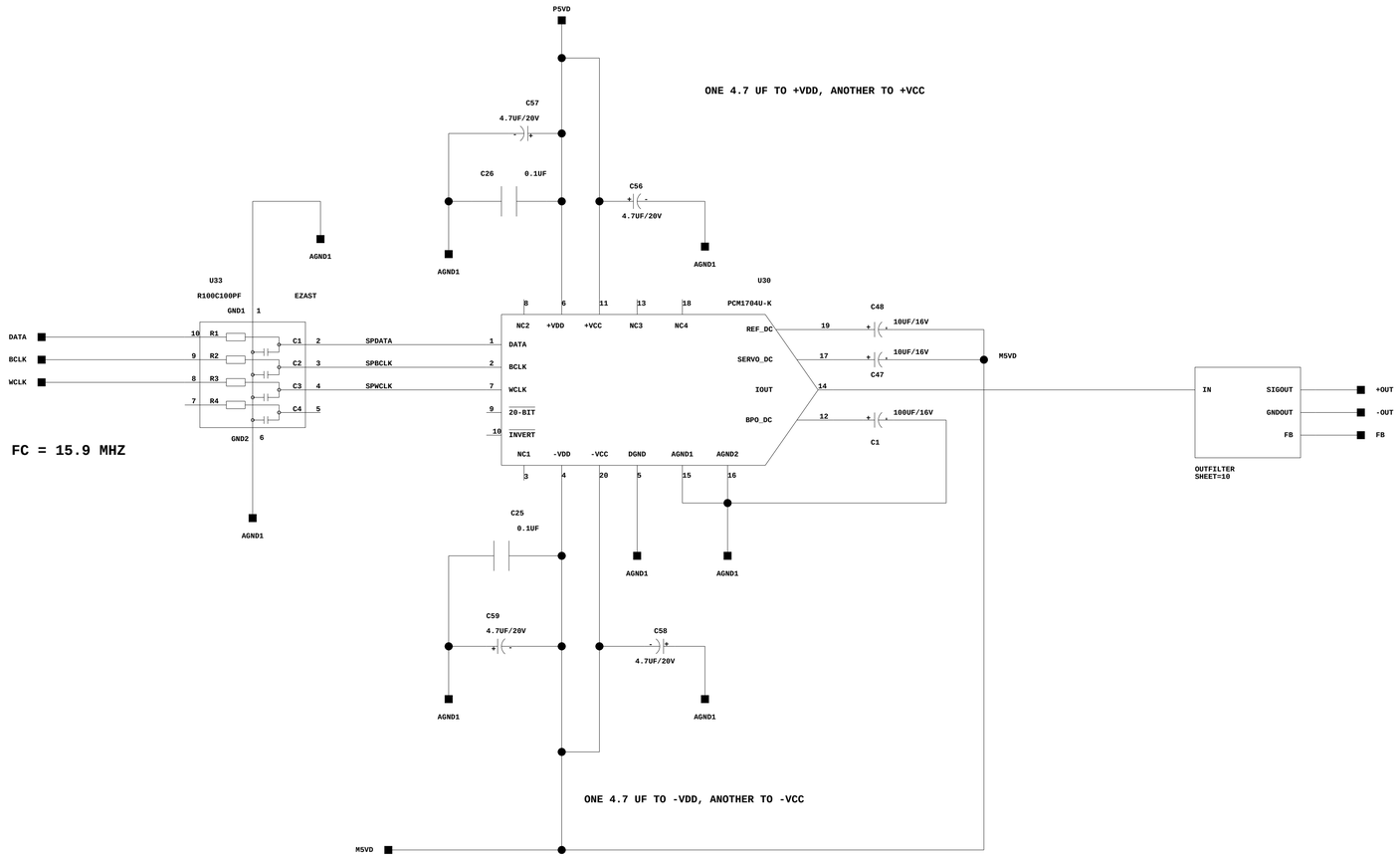

FILENAME:OUTDAC

DATE: 8-20-2002_10:12

STANFORD LINEAR ACCELERATOR CENTER
U.S. DEPARTMENT OF ENERGY
STANFORD UNIVERSITY STANFORD, CALIFORNIA

PROPRIETARY DATA OF STANFORD UNIVERSITY AND/OR U.S. DEPARTMENT OF ENERGY. RECIPIENT SHALL NOT PUBLISH THE INFORMATION WITHIN UNLESS GRANTED SPECIFIC PERMISSION OF STANFORD UNIVERSITY.

		DATE	APPROVALS
ENGR	E. MEDVEDKO		
ENGR	J. OLSEN		
DFTR	B. NORIEGA		
CHKR			

SHEET 9 OF 17

SPEAR III

CANDI

CONTROLLER ANALOG
DIGITAL INTERFACE

D

REV	DESCRIPTION	DFTR	CHKR	ENGR APPV	DATE

P15V* = + 12 V

M15V* = - 12 V

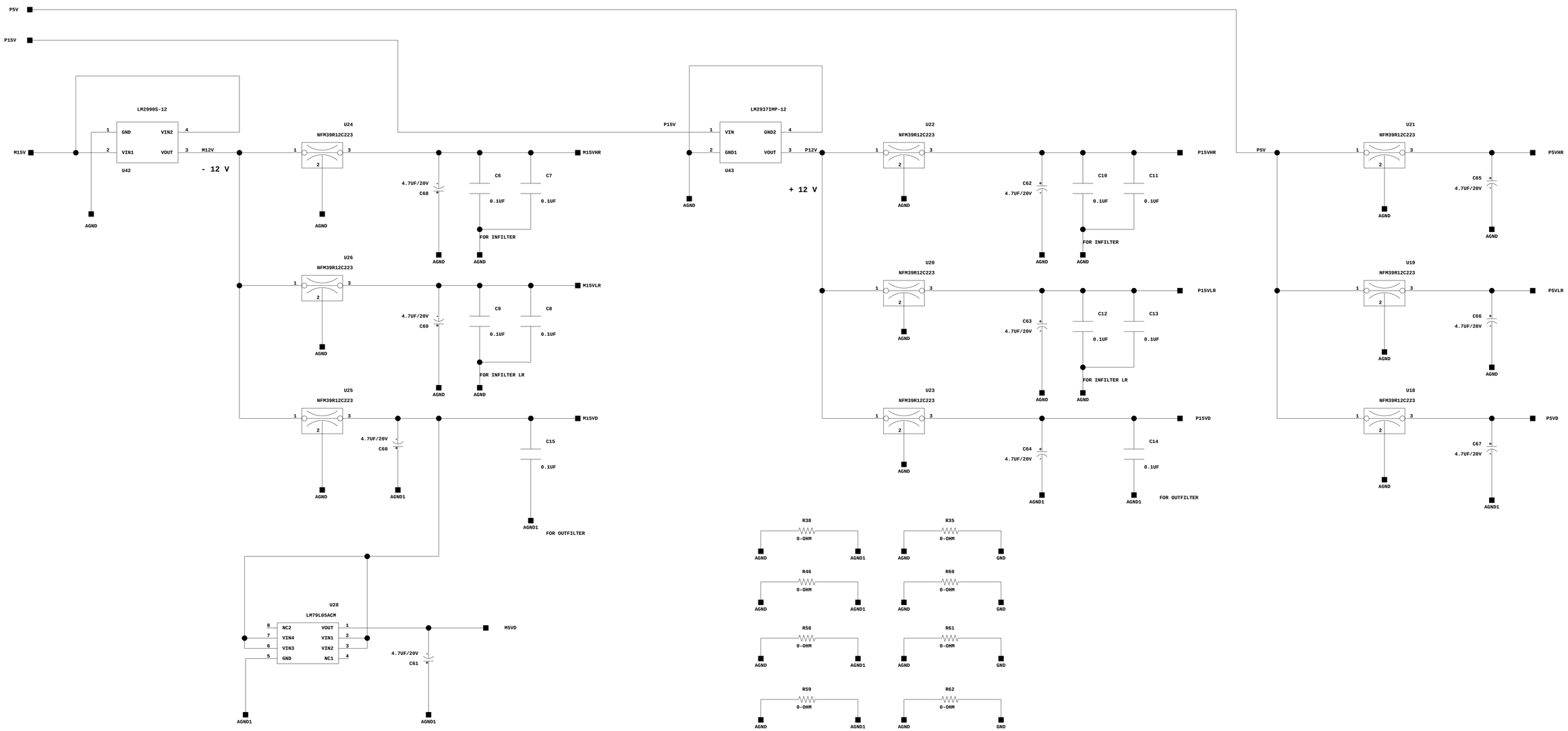

Connect AGNC and DGND with a single trace, individual for each "analog" processing front end.

FILENAME:POWER

DATE: 8-30-2002_14:44

STANFORD LINEAR ACCELERATOR CENTER
U.S. DEPARTMENT OF ENERGY
STANFORD UNIVERSITY STANFORD, CALIFORNIA

PROPRIETARY DATA OF STANFORD UNIVERSITY AND/OR U.S. DEPARTMENT OF ENERGY. RECIPIENT SHALL NOT PUBLISH THE INFORMATION WITHIN UNLESS GRANTED SPECIFIC PERMISSION OF STANFORD UNIVERSITY.

		DATE	APPROVALS
ENGR	E. MEDVEDKO		
ENGR	J. OLSEN		
DFTR	B. NORIEGA		
CHKR			

SHEET 13 OF 17

SPEAR III

CANDI

CONTROLLER ANALOG
DIGITAL INTERFACE

D

REV	DESCRIPTION	DFTR	CHKR	ENGR APPV	DATE

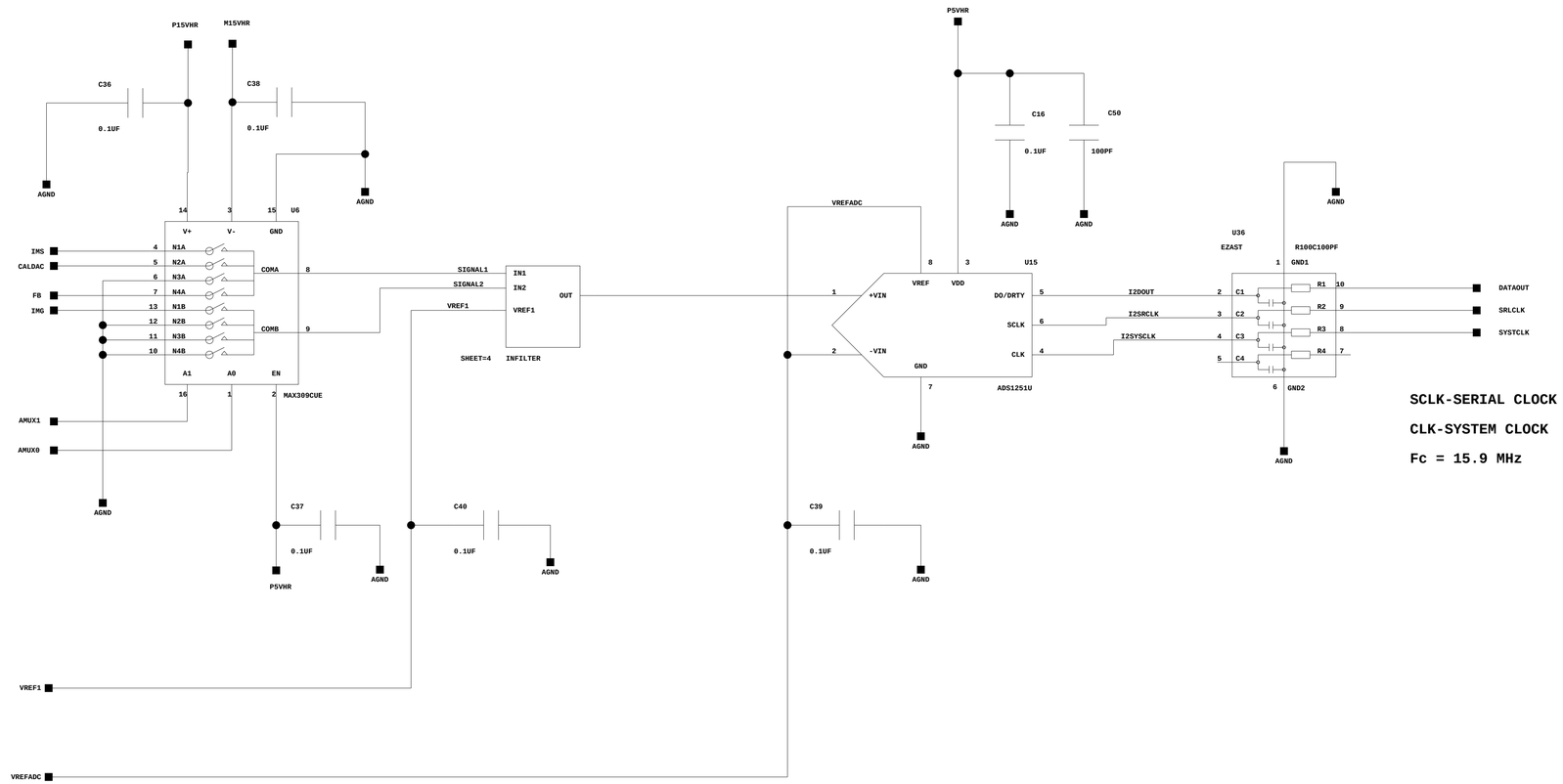

SCLK-SERIAL CLOCK

CLK-SYSTEM CLOCK

Fc = 15.9 MHz

FILENAME:ADC1

DATE: 12-19-2001_11:16

STANFORD LINEAR ACCELERATOR CENTER
U.S. DEPARTMENT OF ENERGY
STANFORD UNIVERSITY STANFORD, CALIFORNIA

PROPRIETARY DATA OF STANFORD UNIVERSITY AND/OR U.S. DEPARTMENT OF ENERGY. RECIPIENT SHALL NOT PUBLISH THE INFORMATION WITHIN UNLESS GRANTED SPECIFIC PERMISSION OF STANFORD UNIVERSITY.

		DATE	APPROVALS
ENGR	E. MEDVEDKO		
ENGR	J. OLSEN		
DFTR	B. NORIEGA		
CHKR			

SHEET 3 OF 17

SPEAR III

CANDI

CONTROLLER ANALOG
DIGITAL INTERFACE

D

REV	DESCRIPTION	DFTR	CHKR	ENGR APPV	DATE

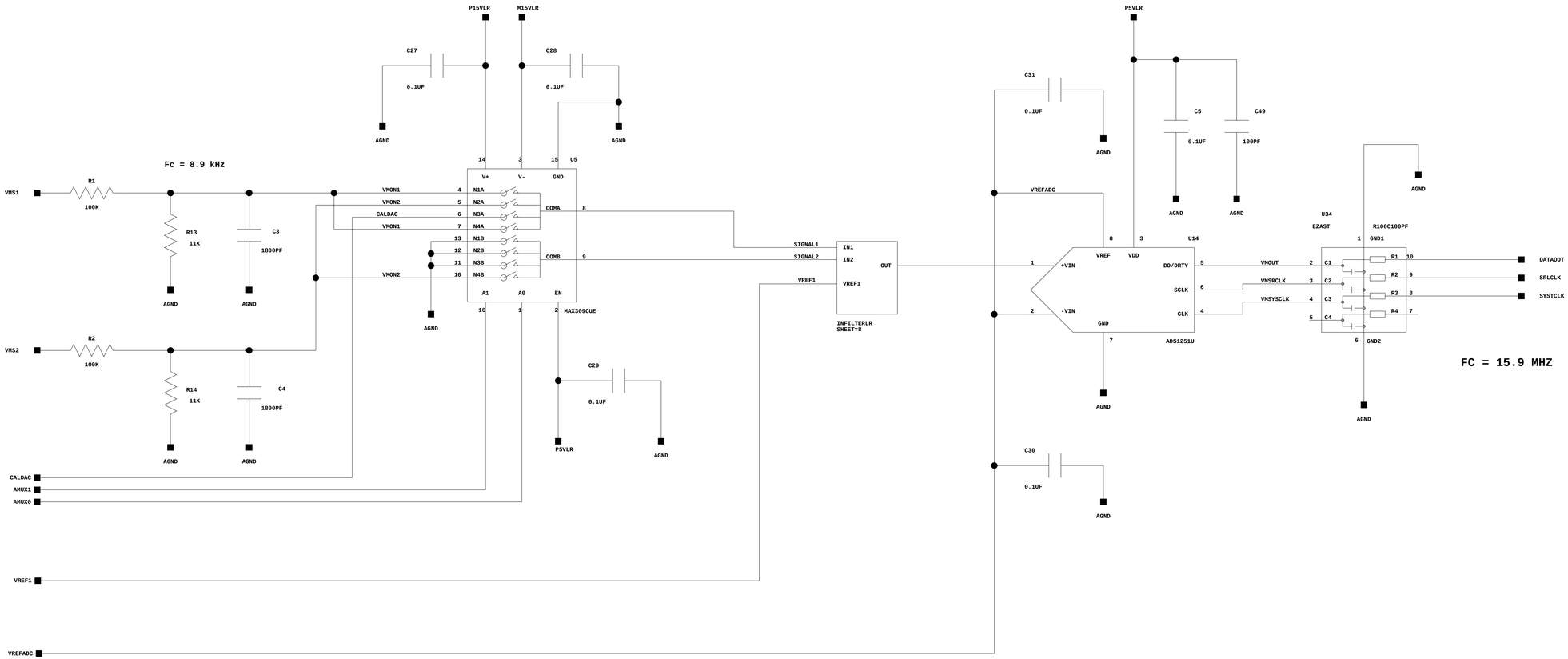

FILENAME:ADCLR

DATE: 12-3-2001_12:36

STANFORD LINEAR ACCELERATOR CENTER

U.S. DEPARTMENT OF ENERGY

STANFORD UNIVERSITY STANFORD, CALIFORNIA

PROPRIETARY DATA OF STANFORD UNIVERSITY AND/OR U.S. DEPARTMENT OF ENERGY. RECIPIENT SHALL NOT PUBLISH THE INFORMATION WITHIN UNLESS GRANTED SPECIFIC PERMISSION OF STANFORD UNIVERSITY.

		DATE	APPROVALS
ENGR	E. MEDVEDKO		
ENGR	J. OLSEN		
DFTR	B. NORIEGA		
CHKR			

SHEET 7 OF 17

SPEAR III

CANDI

CONTROLLER ANALOG DIGITAL INTERFACE

D

REV	DESCRIPTION	DFTR	CHKR	ENGR APPV	DATE

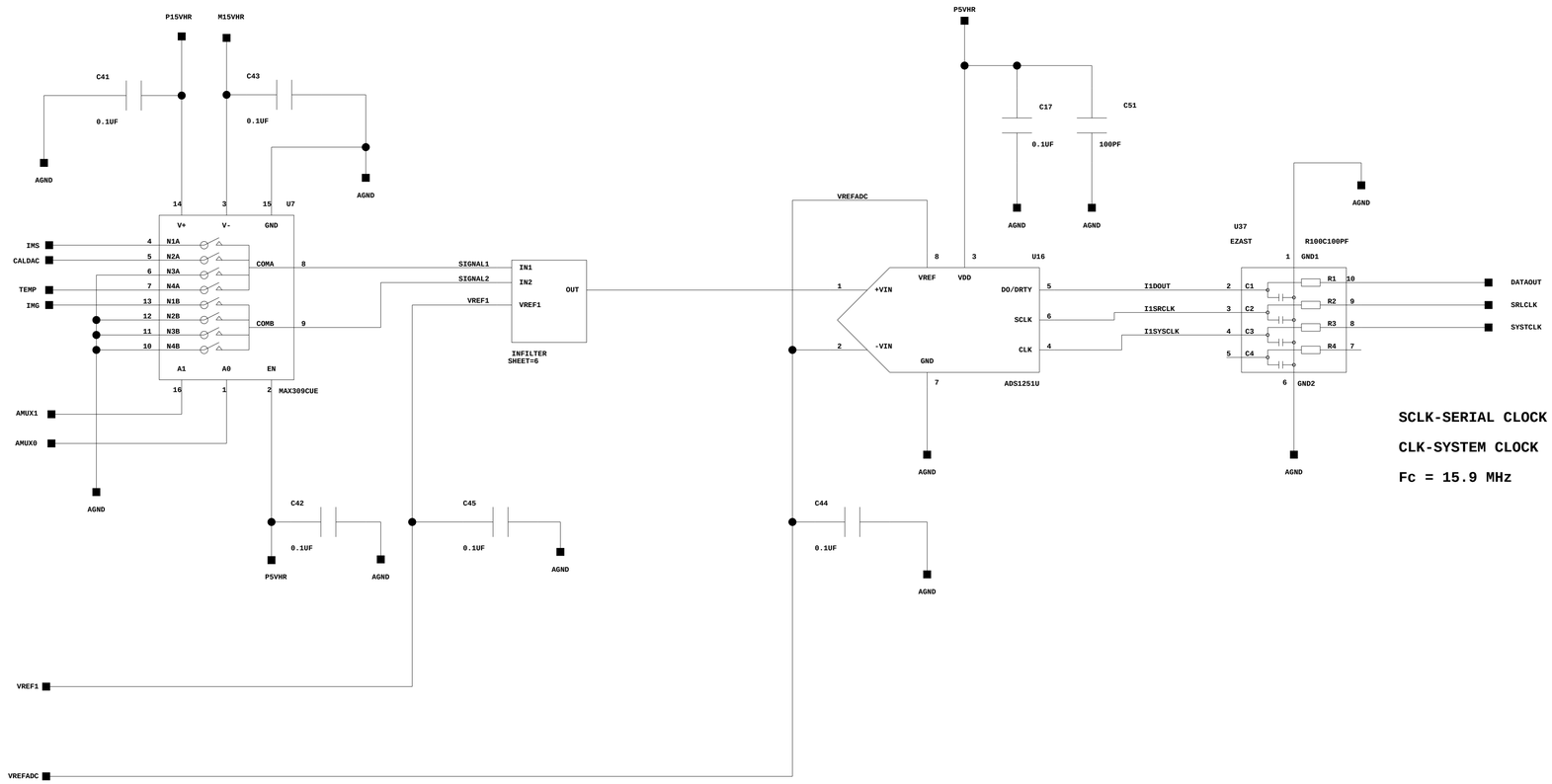

SCLK-SERIAL CLOCK

CLK-SYSTEM CLOCK

Fc = 15.9 MHz

FILENAME:ADC2

DATE: 12-19-2001_11:17

STANFORD LINEAR ACCELERATOR CENTER
U.S. DEPARTMENT OF ENERGY
STANFORD UNIVERSITY STANFORD, CALIFORNIA

PROPRIETARY DATA OF STANFORD UNIVERSITY AND/OR U.S. DEPARTMENT OF ENERGY. RECIPIENT SHALL NOT PUBLISH THE INFORMATION WITHIN UNLESS GRANTED SPECIFIC PERMISSION OF STANFORD UNIVERSITY.

		DATE	APPROVALS
ENGR	E. MEDVEDKO		
ENGR	J. OLSEN		
DFTR	B. NORIEGA		
CHKR			

SHEET 5 OF 17

SPEAR III

CANDI

CONTROLLER ANALOG
DIGITAL INTERFACE

D

REV	DESCRIPTION	DFTR	CHKR	ENGR APPV	DATE

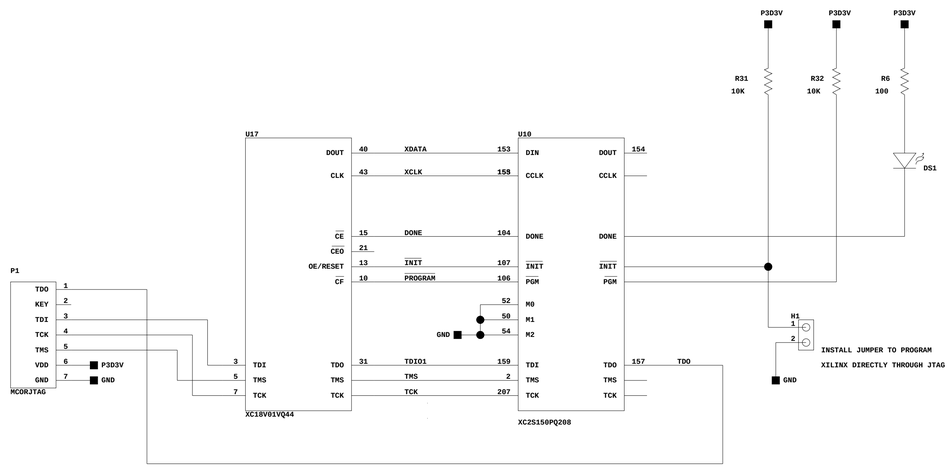

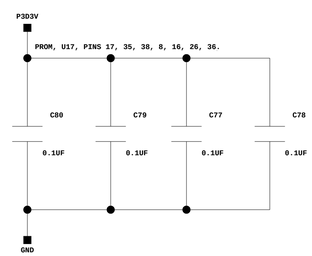

FILENAME:MCORDB_JTAG

DATE: 11-14-2002_16:02

STANFORD LINEAR ACCELERATOR CENTER
U.S. DEPARTMENT OF ENERGY
STANFORD UNIVERSITY STANFORD, CALIFORNIA

PROPRIETARY DATA OF STANFORD UNIVERSITY AND/OR U.S. DEPARTMENT OF ENERGY. RECIPIENT SHALL NOT PUBLISH THE INFORMATION WITHIN UNLESS GRANTED SPECIFIC PERMISSION OF STANFORD UNIVERSITY.

		DATE	APPROVALS
ENGR	E. MEDVEDKO		
ENGR	J. OLSEN		
DFTR	B. NORIEGA		
CHKR			

SHEET 15 OF 17

SPEAR III

CANDI

CONTROLLER ANALOG
DIGITAL INTERFACE

D

REV	DESCRIPTION	DFTR	CHKR	ENGR APPV	DATE

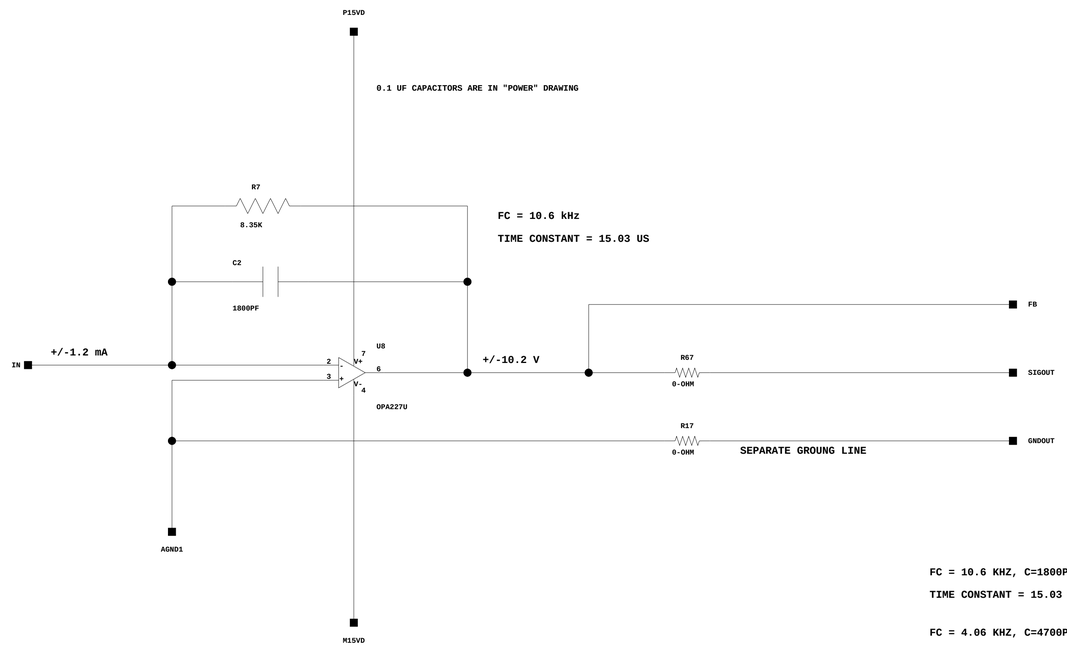

FC = 10.6 KHZ, C=1800PF

TIME CONSTANT = 15.03 US

FC = 4.06 KHZ, C=4700PF

TIME CONSTANT = 39 US

FILENAME:OUTFILTER

DATE: 8-23-2002_10:36

STANFORD LINEAR ACCELERATOR CENTER
U.S. DEPARTMENT OF ENERGY
STANFORD UNIVERSITY STANFORD, CALIFORNIA

PROPRIETARY DATA OF STANFORD UNIVERSITY AND/OR U.S. DEPARTMENT OF ENERGY. RECIPIENT SHALL NOT PUBLISH THE INFORMATION WITHIN UNLESS GRANTED SPECIFIC PERMISSION OF STANFORD UNIVERSITY.

		DATE	APPROVALS
ENGR	E. MEDVEDKO		
ENGR	J. OLSEN		
DFTR	B. NORIEGA		
CHKR			

SHEET 10 OF 17

SPEAR III

CANDI

CONTROLLER ANALOG
DIGITAL INTERFACE

D

REV	DESCRIPTION	DFTR	CHKR	ENGR APPV	DATE

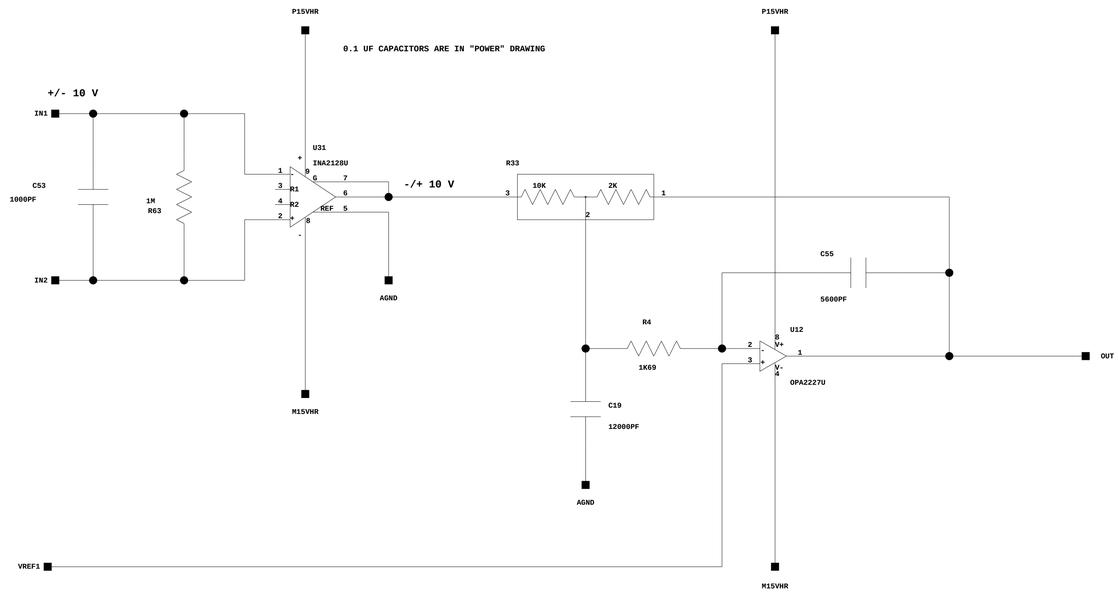

FC = 10 KHZ.

VOUT = VIN * 2K/10K+ 2.5V*10K/(10K+2K)*(1+2K/10K)

VOUT = VIN * 0.2+ 2.5V

AT VIN = +12 V	VOUT = +4.9 V
AT VIN = +10 V	VOUT = +4.5 V
AT VIN = +5 V	VOUT = +3.5 V
At VIN = 0 V	VOUT = +2.5 V
AT VIN = -5 V	VOUT = +1.5 V
AT VIN = -10 V	VOUT = +0.5 V
AT VIN = -12 V	VOUT = +0.1 V

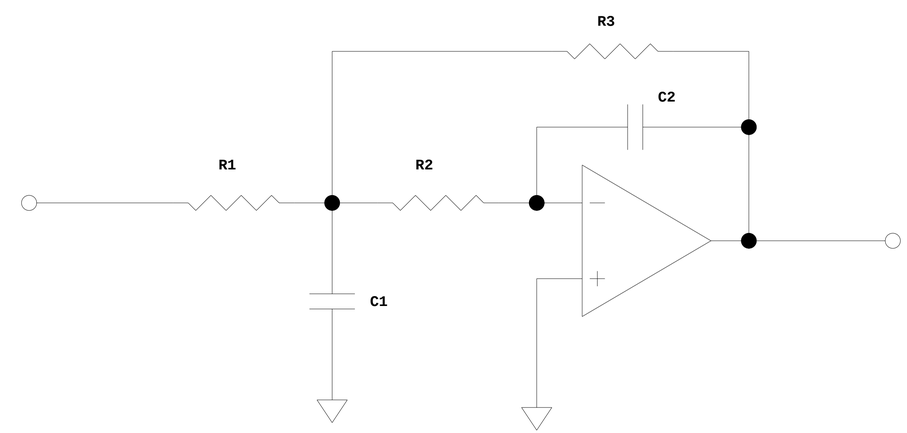

FILENAME:INFILTER

DATE: 8-21-2002_9:57

STANFORD LINEAR ACCELERATOR CENTER
U.S. DEPARTMENT OF ENERGY
STANFORD UNIVERSITY STANFORD, CALIFORNIA

PROPRIETARY DATA OF STANFORD UNIVERSITY AND/OR U.S. DEPARTMENT OF ENERGY. RECIPIENT SHALL NOT PUBLISH THE INFORMATION WITHIN UNLESS GRANTED SPECIFIC PERMISSION OF STANFORD UNIVERSITY.

		DATE	APPROVALS
ENGR	E. MEDVEDKO		
ENGR	J. OLSEN		
DFTR	B. NORIEGA		
CHKR			

SPEAR III

CANDI

CONTROLLER ANALOG
DIGITAL INTERFACE

D

REV	DESCRIPTION	DFTR	CHKR	ENGR APPV	DATE

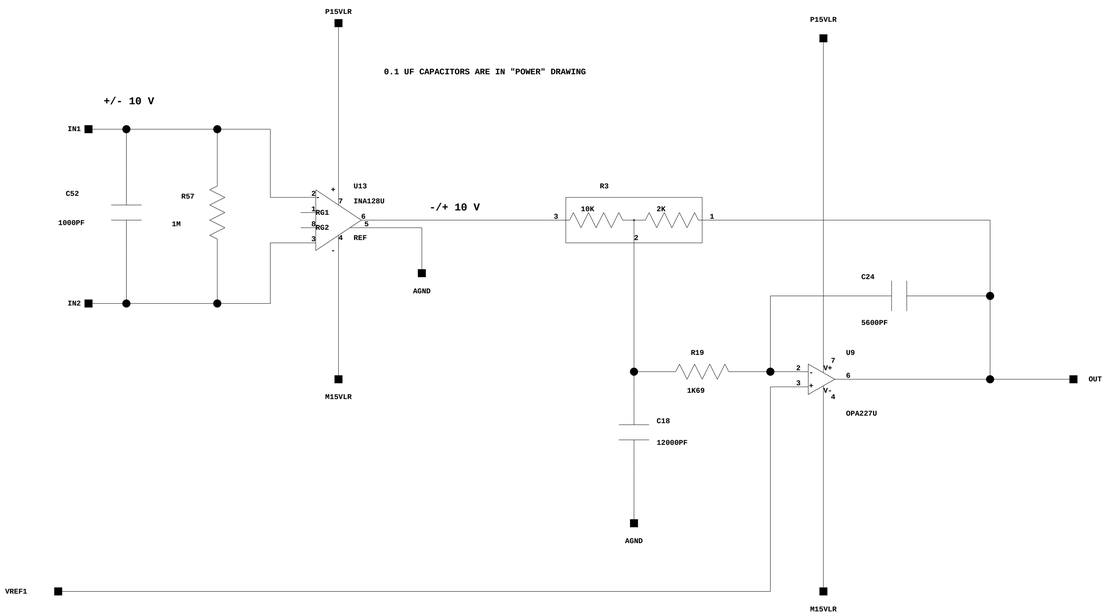

FC = 10 KHZ.

VOUT = VIN * 0.2 + 2.5 V

AT VIN = +12 V	VOUT = +4.9 V
AT VIN = +10 V	VOUT = +4.5 V
AT VIN = +5 V	VOUT = +3.5 V
AT VIN = 0 V	VOUT = +2.5 V
AT VIN = -5 V	VOUT = +1.5 V
AT VIN = -10 V	VOUT = +0.5 V
AT VIN = -12 V	VOUT = +0.1 V

FILENAME:INFILTERLR

DATE: 8-21-2002_16:35

STANFORD LINEAR ACCELERATOR CENTER
U.S. DEPARTMENT OF ENERGY
STANFORD UNIVERSITY STANFORD, CALIFORNIA

PROPRIETARY DATA OF STANFORD UNIVERSITY AND/OR U.S. DEPARTMENT OF ENERGY. RECIPIENT SHALL NOT PUBLISH THE INFORMATION WITHIN UNLESS GRANTED SPECIFIC PERMISSION OF STANFORD UNIVERSITY.

		DATE	APPROVALS
ENGR	E. MEDVEDKO		
ENGR	J. OLSEN		
DFTR	B. NORIEGA		
CHKR			

SHEET 8 OF 17

SPEAR III

CANDI

CONTROLLER ANALOG
DIGITAL INTERFACE

D

REV	DESCRIPTION	DFTR	CHKR	ENGR APPV	DATE

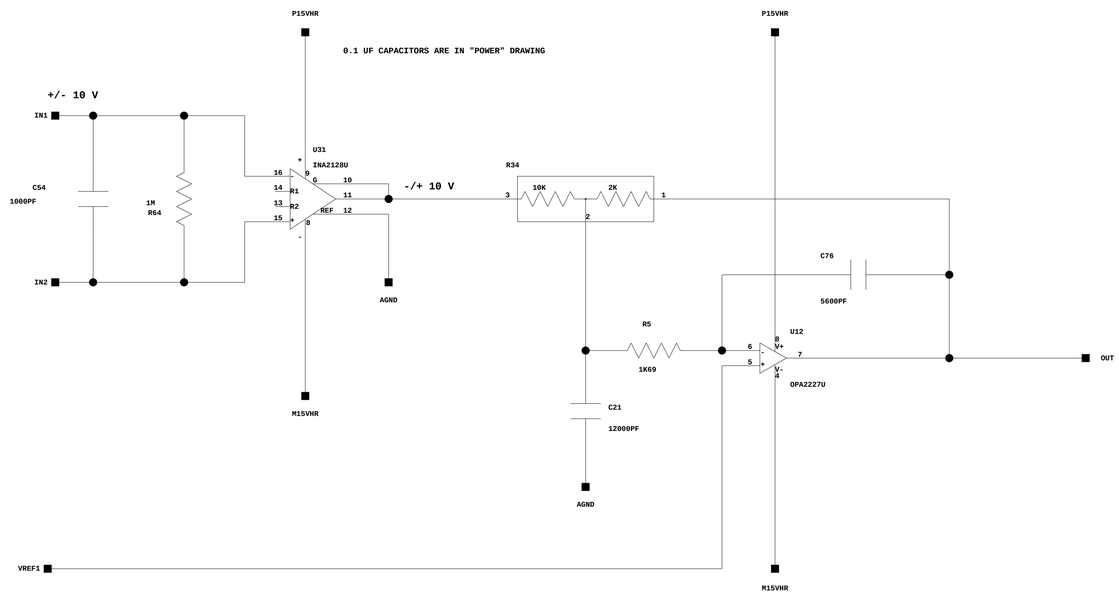

FC = 10 KHZ.

VOUT = VIN * 2K/10K+ 2.5V*10K/(10K+2K)*(1+2K/10K)

VOUT = VIN * 0.2+ 2.5V

AT VIN = +12 V	VOUT = +4.9 V
AT VIN = +10 V	VOUT = +4.5 V
AT VIN = +5 V	VOUT = +3.5 V
At VIN = 0 V	VOUT = +2.5 V
AT VIN = -5 V	VOUT = +1.5 V
AT VIN = -10 V	VOUT = +0.5 V
AT VIN = -12 V	VOUT = +0.1 V

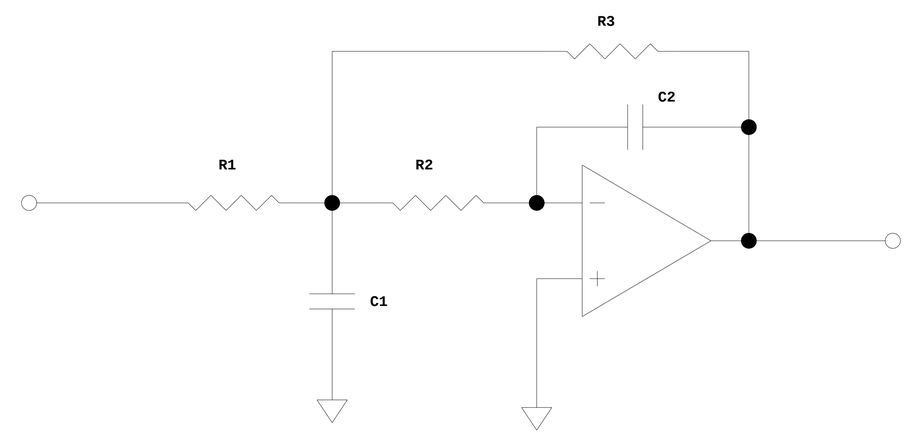

FILENAME:INFILTER

DATE: 8-21-2002_9:57

STANFORD LINEAR ACCELERATOR CENTER
U.S. DEPARTMENT OF ENERGY
STANFORD UNIVERSITY STANFORD, CALIFORNIA

PROPRIETARY DATA OF STANFORD UNIVERSITY AND/OR U.S. DEPARTMENT OF ENERGY. RECIPIENT SHALL NOT PUBLISH THE INFORMATION WITHIN UNLESS GRANTED SPECIFIC PERMISSION OF STANFORD UNIVERSITY.

		DATE	APPROVALS
ENGR	E. MEDVEDKO		
ENGR	J. OLSEN		
DFTR	B. NORIEGA		
CHKR			

SPEAR III

CANDI

CONTROLLER ANALOG
DIGITAL INTERFACE

D