SLAC Proposal SP-1

December 27 1971

1. Title of Experiment: Proposal for a Magnetic Detector for SPEAR

2. Spokesman: Rudolf R. Larsen

Experimenters:

Name	Group and Distribution
A. M. Boyarski	Group C - SLAC
J. Dakin	Group E - SLAC
G. Feldman	Group E - SLAC
G. E. Fischer	Group C - SLAC
D. Fryberger	Group EFD - SLAC
Rudolf R. Larsen	Group C - SLAC
H. L. Lynch	Group C - SLAC
F. Martin	Group E - SLAC
M. L. Perl	Group E - SLAC
J. R. Rees	Group C - SLAC
B. Richter	Group C - SLAC
R. F. Schwitters	Group C - SLAC
G. S. Abrams	LBL - UC Berkeley
W. Chinowsky	LBL - UC Berkeley
C. E. Friedberg	LBL - UC Berkeley
G. Goldhaber	LBL - UC Berkeley
R. J. Hollebeck	LBL - UC Berkeley
J. A. Kadyk	LBL - UC Berkeley
G. H. Trilling	LBL - UC Berkeley
J. S. Whitaker	LBL - UC Berkeley
J. Zipse	LBL - UC Berkeley

G.E.F. 12/28/71

CONTENTS

A. INTRODUCTION

We are constructing a large magnetic detector facility to be used with the $e^+ + e^-$ storage ring SPEAR. This proposal contains a functional description of the detector, descriptions of the various components and a request for the beam-time necessary to make the detector operational. SLAC USERS BULLETIN No. 26 contains a general description of the SLAC storage ring facility (SPEAR).

The detector, depicted in Figs. 1 and 2, is a large solenoid containing a system of wire chambers and scintillators. A particle emanating from the interaction region within the angular interval $45^\circ \rightarrow 135^\circ$ traverses in sequence: (1) the beam vacuum chamber; (2) a proportional wire chamber; (3) a series of cylindrical wire spark chambers which extend over a radius of ~1.5 m and provide the momentum measurement; (4) a cylindrical array of scintillation counters which provide the basic trigger and time-of-flight information; (5) the aluminum coil of the solenoid; (6) a cylindrical array of Pb-scintillator shower counters; (7) the eight-inch iron flux return; and (8) planar wire spark chambers which record the transmission of the particle through the system. Thus, information is acquired on the particle species (hadron, muon, electron, photon), the kinematics and the mass.

The interior of the solenoid is designed so that there is relatively easy access to the region inside a radius of 0.5 meter. This offers the flexibility of placing various combinations of counters and chambers in this region without the need to disassemble major components of the detector. Initially, removable spark chambers (not shown in Fig. 2) will be installed and will detect charged particles down to an angle of 15° - 20° with respect to the beam line.

The detector being built for SPEAR is a device of great complexity. Although every effort will be made to test the individual components of the system before installation, experience has shown that making such a system operational requires a major effort beyond making the individual components work. To a large extent debugging depends upon total elapsed time as long as some minimum amount of "beam" is available. Based on experience with systems of comparable complexity, we estimate that four cycles of intensive work would be required to bring the system into a reasonable state of readiness.

B. THE DETECTOR

1. The Magnet

The nature of the reactions to be studied dictates a magnetic field which surrounds the interaction region permitting good momentum resolution over as large a fraction of the total solid angle as possible. Of the several conceivable configurations, we have chosen a geometry (see Fig. 1) in which the field is parallel to the intersecting beams.[1] The length of the magnet is set by the drift length between the quadrupoles in the interaction region. The magnitude and radial dimension of the field are set by the requirements of momentum resolution (see Appendix) and by balancing the various considerations of spark chamber wire spacing, multiple scattering, particle direction, solid angle and total power availability. The resulting parameters are listed in the Table.

Nominal Field on Axis	4 kG	ID, Main Coil	126"
Turns in Main Coil	264	Length, Main Coil	140"
Nominal Current	4671A	Power, Main Coil	2.4 MW
Voltage Main Coil	500V	Maximum Temperature Rise	50° F
Voltage Comp. Coil	84V	Conductor Size (hole 0.4" × 0.86")	1" × 1.6"
Weight of Steel	130 Tons	Weight of Main Coil, Aluminum	15,000 lb

Extensive studies[2] on the interaction of the beam with a solenoidal field have shown that it is necessary to compensate transverse beam coupling to maintain luminosity. First-order coupling vanishes if the integral $\int B_z dz$ vanishes along the beam path. This is accomplished by the introduction of two symmetrically placed axial coils as shown in Figs. 1 and 2. Verification of this method of compensation has recently been demonstrated with the ACO ring at Orsay.[3]

Having chosen the basic parameters as indicated above, an analysis of field uniformity and the required flux return areas was performed with the aid of

the program POISSON. A typical result is shown in Fig. 3. Over the volume of greatest interest, namely the cone between 45° and 135° with respect to the axis, the field deviates by no more than $\pm 1\%$ from its mean value and the flux density in the steel is kept below 13 kG insuring reasonably linear operation of the magnet. It is planned to measure the field and fit the data to a cylindrical expansion series with an accuracy of $\pm 0.3\%$.[4]

The mechanical design of the magnet contains a number of interesting features. The flux return iron acts as a hadron filter as described in section B.3.c. Octagonal rather than cylindrical construction permits the use of readily available flat steel plate. The sides of the octagon in the median plane are removable, and extended paths for more precise mass determination become available. Access to the spark chambers, their electronics and other apparatus inside the cylinder is afforded by axially sliding the end caps to their open position. These end caps are notched to pass over the otherwise interfering adjacent quadrupoles. The key which remains supports the compensating coils and the vacuum chamber. One may also note that opening a door does not require the uncabling of the 72 phototubes which view the trigger and shower counters from each end of the cylinder.

2. The Magnetic Detector Vacuum Chamber

Design objectives for the vacuum chamber which surrounds the interaction region inside the SPEAR magnetic detector are: (1) that it maintain an ultrahigh vacuum ($P < 10^{-9}$ Torr), (2) that it be self supporting over the length of the detector (~3 meters), and (3) that it have a minimum possible wall thickness so as to minimize energy loss and multiple scattering of particles passing through it. Another desirable feature is to minimize the diameter (consistent with beam "stay clear" and background considerations) so that long-lived neutral particles (e. g., Λ^{0}), will decay outside the vacuum pipe.

Background calculations[5] indicate the possibility of significant numbers of high-energy gamma rays striking a small-diameter beam pipe which could give rise to serious backgrounds within the magnetic detector. Because of the uncertainties in these background estimates, a prudent approach to the vacuum chamber design has been taken and a conservative design will be used in the first rounds of experiments until the backgrounds are understood experimentally.

The actual design to be used in the SPEAR magnetic detector will be a simple aluminum pipe 6 inches in diameter with a wall thickness of 0.100 inch. This pipe will run the full length of the detector with flanges just inside of the compensating solenoids. Bakeout will be performed either with removable electrical heater tapes or with hot air contained in a permanently affixed coaxial manifold. The details of the vacuum chamber design have yet to be worked out. This design represents a conservative compromise in terms of the mechanical stability of the vacuum chamber, background considerations, and the requirement of minimum wall thickness for accurate track reconstruction.

3. Track Chambers

a. The Internal Wire Spark Chambers

The interior of the solenoid contains ten gaps of wire spark chambers having right circular cylindrical geometry, approximately 2.5 meters long. The gaps are arranged in pairs; one gap has purely axial wires, and the other gap has wires slanted at ±70 milliradians to the axis of the solenoid. The members of a pair of gaps are closely spaced, and the five pairs of gaps are distributed approximately uniformly, along the radius of the solenoid between 0.4 and 1.4 meters. The four outer pairs of gaps are mounted in a common gas volume, while the innermost pair of gaps can be removed as discussed in the introduction. These chambers provide the basic momentum and angle measurements. The expected resolution is discussed in the Appendix.

Each gap consists of one high-voltage plane and one ground plane. The wires are read by means of a discrete, one-circuit-per-wire system, but only the ground planes are read. This readout system was chosen because it must function in the full magnetic field of the solenoid. A side result of this choice of readout is that the chambers will have an inherently large multispark efficiency. We expect to achieve spatial resolution of ±0.5 mm in the azimuthal direction and ±10 mm in the axial direction from each pair of gaps.

Such a large array of spark chambers makes heavy demands upon a high-voltage pulsing system. We have developed a system for this purpose using large thyratrons discarded from the SLAC modulators. The maximum repetition rate of the pulsing system is approximately 10/sec, a limit imposed primarily by the dc power supply (20 kV at 0.5 amp).

b. Proportional Wire Chamber

It is planned to include a charged-particle detector close to the interaction region inside the ten cylindrical wire spark chambers. While wire proportional chambers have not achieved spatial resolutions equ to those of wire spark chambers, the proportional chambers have the distinct advantage of a relatively short sensitive time. This makes it possible to use the proportional chambers as a part of the event trigger, significantly reducing cosmic rays as a source of background.

c. The External Muon Chambers

Two identical wire spark chamber gaps (3/8") will be separated by 3-1/2" and positioned on the outside surface of each of the 8 sides of the octagonal flux return structure. The active area of each gap is 172" x 69" and accepts polar angles ranging from 47° to 133°. The high-voltage plane is made of aluminum window screen and is driven along the 70" dimension by ten 31-ohm terminated lines. The ground plane consists of aluminum wires (10 per cm) oriented parallel to the solenoid field and will be read magnetostrictively. Thus, these chambers will measure the projected positions and angles of those particles transmitted through the iron. The expected resolutions for these "transverse" parameters are: (1) position, $\pm$ 1 mm and (2) angle, $\pm \sim 1^{\circ}$ at small angles and $\sim \pm 7\%$ at large angles (relative to chamber normal).

These muon chambers are designed, in conjunction with the iron flux return, to separate muons from hadrons. A 2.5-GeV muon passing through 8 inches of iron has rms deviations in projected position of ± 2.3 mm and in projected angle of $\pm 1.1^{\circ}$. Hence, the above muon chamber resolution is well matched to the circle of confusion of the highest energy muons.

4. The Counters

a. Trigger Counters

As shown in Figs. 1 and 2, there will be 48 non-overlapping trigger counters located at a radius of about 59". Each will be 103" long, 8" wide and 1" thick and will be viewed from both ends by photomultipliers. The counters are expected to provide precise time-of-flight information. Tests indicate that they should yield a fwhm time-of-flight measurement of about 0.5 nsec for each particle, which is sufficient to provide a three standard-deviation π-K separation up to 0.78 GeV/c and a three-standard deviation K-p up to 1.24 GeV/c. The two photomultiplier signals will be sent to a position compensating circuit which will provide a trigger signal with about 2 ns jitter. The event trigger is formed from these signals, the shower counters, the rf phase, and from the proportional chamber (section B.3.b).

b. Shower Counters

A total of 24 lead-scintillator shower counters will be positioned at the outer radius of the aluminum solenoid coil subtending about 0.65 of 4π solid angle. Each counter will be ~120" long (axial dimension), ~18" wide and consist of five 1/4" scintillators interleaved with five 1/4" lead sheets. Two 5" photomultipliers (exiting the field through holes in the iron end caps of the magnet) will view each counter; we will add, integrate and digitize these two signals.

Preliminary studies of a prototype counter indicate we can expect a fractional energy resolution of $\sigma_E/E \lesssim 0.25/\sqrt{E}$. This resolution will insure adequate efficiency for the correct identification of e^+e^- elastic scatters (which have the largest cross section) while including only a few percent of the hadron pairs.

While we intend to use these counters primarily for identifying $e^{\pm}$ pairs, they will be useful in the detection of energy not present in charged tracks, such as gammas from π^0 decay. The azimuthal angular bite of a counter and a comparison of the pulse heights of the signals from the two tubes will provide an rms angular resolution (azimuth x polar) of $\sigma_\varphi \times \sigma_\theta \sim 0.08$ rad x 0.05 rad.

C. THE ON-LINE COMPUTER SYSTEM

The SPEAR magnetic detector will be interfaced to an XDS Sigma 5 Computer which will log event data on magnetic tape and will provide on-line data analysis. The computer operates in a time-shared mode and will perform a central role in controlling the performance of the storage ring in addition to its experimental data aquisition and analysis functions.

Whenever an event causes the detection system to trigger, an interrupt is sent to the computer, causing the digital input system of the Sigma 5 to read all the detector data (spark addresses, ADC's etc.) for that event into a foreground buffer area of memory. A high priority task of the computer will be to transfer this data to magnetic tape for subsequent off-line analysis.

This buffer area will also be accessible to a time shared job associated with the experiment which can analyze these events on a sampling basis. By use of program overlays, it will be possible to have such items as one event displays, track recognition, and diagnostic information such as spark chamber inefficiencies, multiplicities, etc. A histogram sorting and displaying program will facilitate making histograms of desired variables and displaying them on a scope or line printer. The spark coordinates from the track-recognition program will be input to a track-fitting program which provides the momenta and angles of tracks for the event. This, together with the shower counter and muon chamber information will allow classification of events and generation of such quantities as angle or momentum distributions of e^+e^-, $\mu^+\mu^-$, $\pi^+\pi^-$, π + anything, etc. A more detailed description of the computer system is given in SLAC Users Bulletin No. 26.

D. LUMINOSITY MONITORING

The reaction $e^+e^- \rightarrow \mu^+ + \mu^-$ provides a distinct signal in the SPEAR detector at a maximum rate of ~ 0.3 sec^{-1} and is therefore a very convenient and reliable monitor. It has an advantage over monitors, that view $e^\pm$ reactions at small angles, of providing information on the spatial extent and position of the beam overlap region. It is essentially free of background and accidental contaminants.

Counters to detect Bhabha scattering at angles of $\sim$20 mrad and to monitor the photon energy from single small-angle bremsstrahlung reactions serve as absolute and relative luminosity monitors, respectively. These are the standard SPEAR luminosity monitors and are discussed in SLAC Users Bulletin No. 26.

REFERENCES

[1]See, for example, "Proposal for a High Energy Electron-Positron Colliding Beam Storage Ring," SLAC, Rev. Ed., September 1966, p. 128; also, Boyarski et al., "Magnetic Detector for a 3 GeV e^+e^- Storage Ring," Paper VI, 1, Proceedings of the International Symposium on Electron and Positron Storage Rings, Orsay, France, September 1966.

[2]See, for example, "Some Coupling Effects between Horizontal and Vertical Betatron Motions in SPEAR due to Magnetic Solenoid and Compensating Fields," T. M. Nguyen, P. L. Morton, SPEAR-125, September 1971; "Transport Matrices for a Magnetic Solenoid," R. R. Larsen, SPEAR-107, March 1971.

[3]"Status Report on ACO," D. Potaux, paper presented at the VIIIth International Conference on High Energy Accelerators, CERN, Geneva, Sept. 20-24, 1971.

[4]"Magnetic Field Fit to the 30" BNL Bubble Chamber," Uriel Nauenberg et al., BNL Internal Report EP and S Div. 68-1.

[5]R. F. Schwitters, SPEAR-134, November 1971.

APPENDIX
The Momentum and Angle Resolution

The fractional rms momentum resolution to be expected with a 4-kG field and the described internal chamber system has been calculated. Tracks were generated isotropically over the polar angle range $45^{\circ} \leq \theta \leq 135^{\circ}$. Generated tracks were "perturbed" by measurement and multiple-scattering effects and then fitted to determine the "measured" momentum. The measurement precision of single tracks (those originating at the interaction region and exiting the coil) are dominated by measurement uncertainties. Collinear pairs were fitted to a single "global" track; this reduces measurement errors and the precision is determined by the multiple scattering. The angular divergence of the $e^{\pm}$ beams (a few mrad) affects the global track resolution. The divergence in the $e^{\pm}$ bending plane can be eliminated by running in the "high η" mode. Results are plotted in Fig. 4. As shown, the global track resolution depends on the azimuthal angle.*

The azimuthal-angle resolution is of order 1 mrad. Because of the small stereo angle, the polar-angle resolution is $\sim$10 mrad. (This 10-mrad resolution does not contribute significantly to the net momentum precision which is determined primarily by the transverse momentum accuracy.)

---

*The velocity dependence of the multiple scattering is not included in the calculations; for this reason the resolution should be scaled up by $(1 + \frac{M^2}{p^2})^{\frac{1}{2}}$ in those regions where it is dominated by multiple scattering (σ_p/p relatively insensitive to p).

LIST OF FIGURES

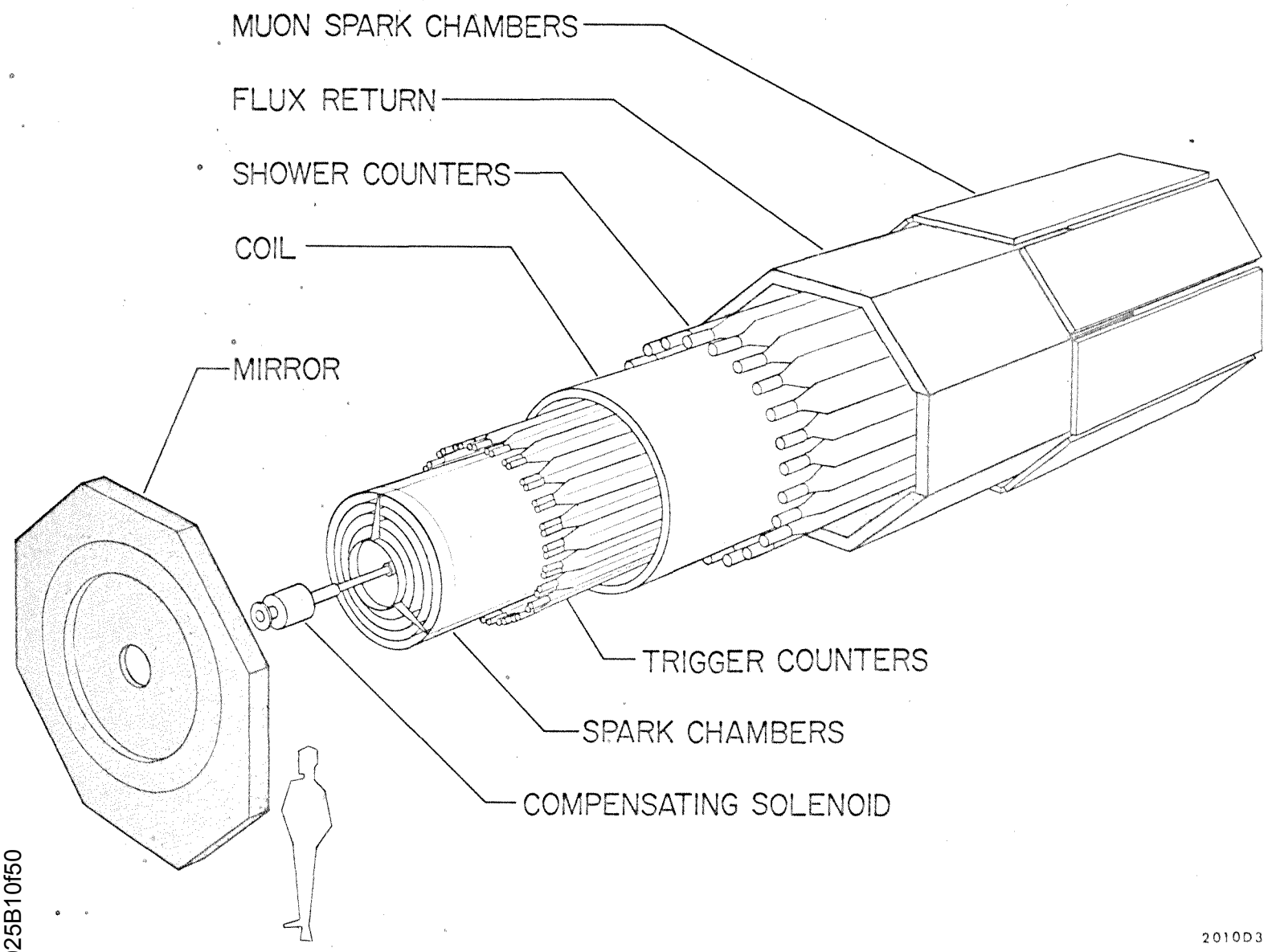

FIGURE 1

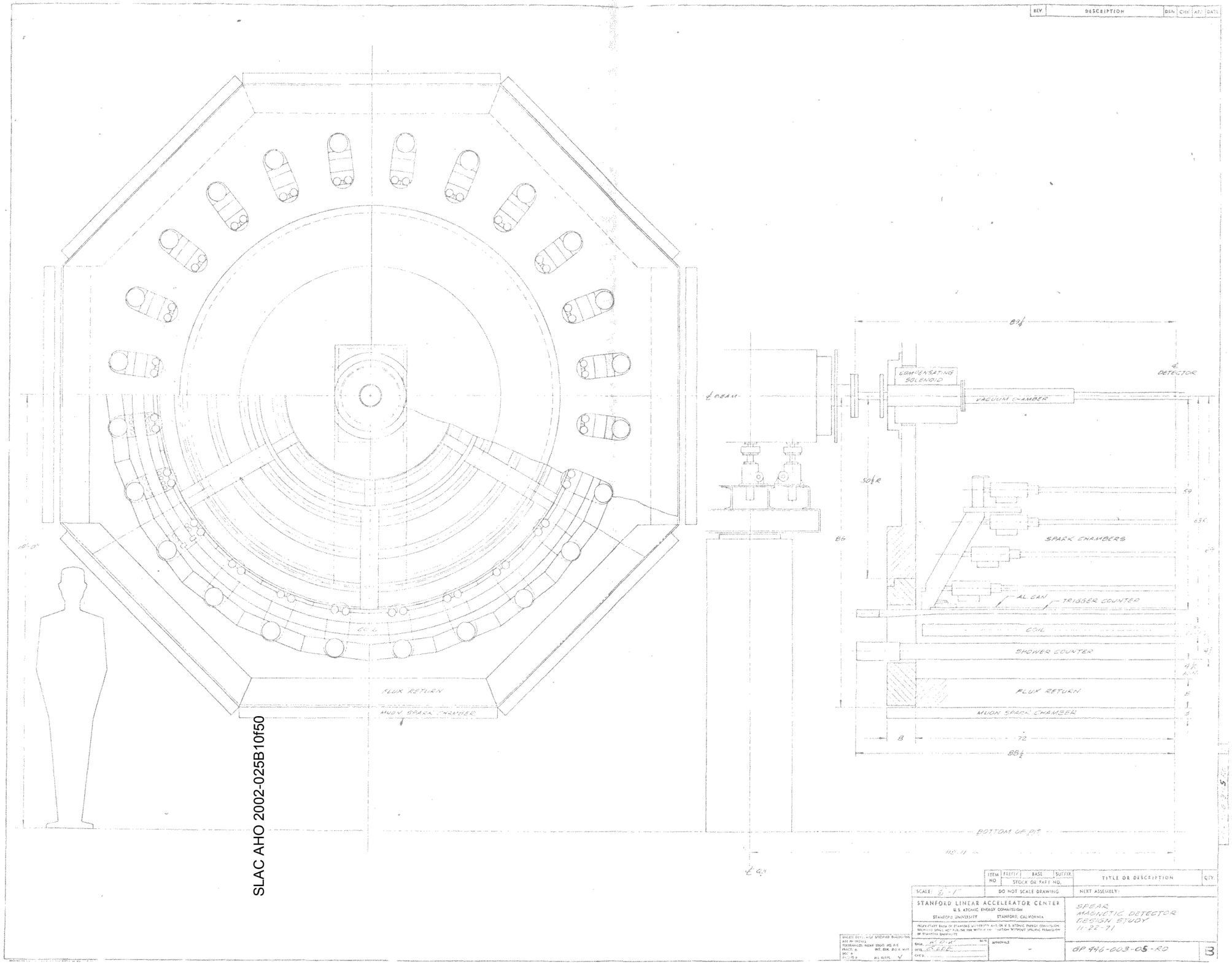

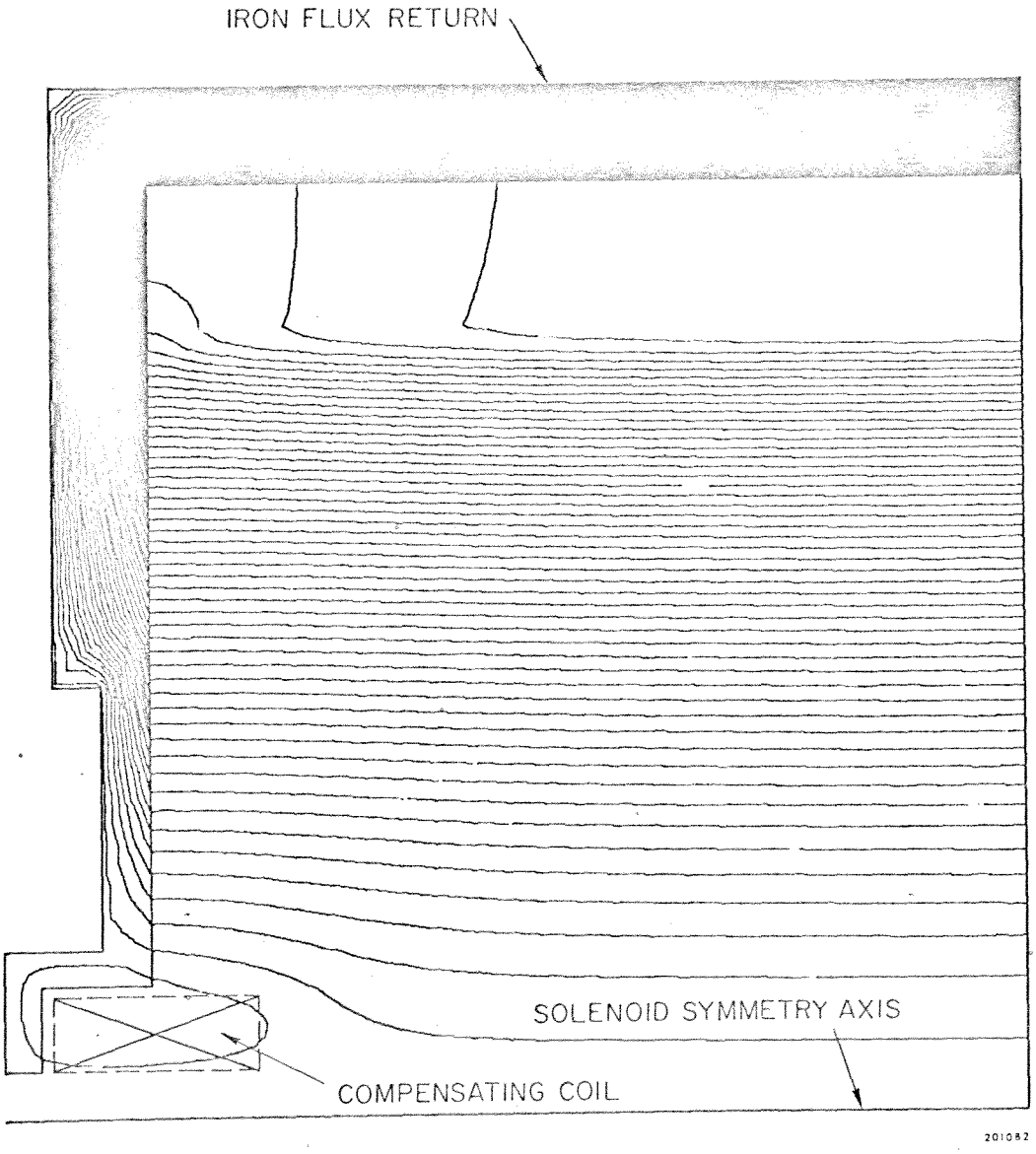

FIGURE 3

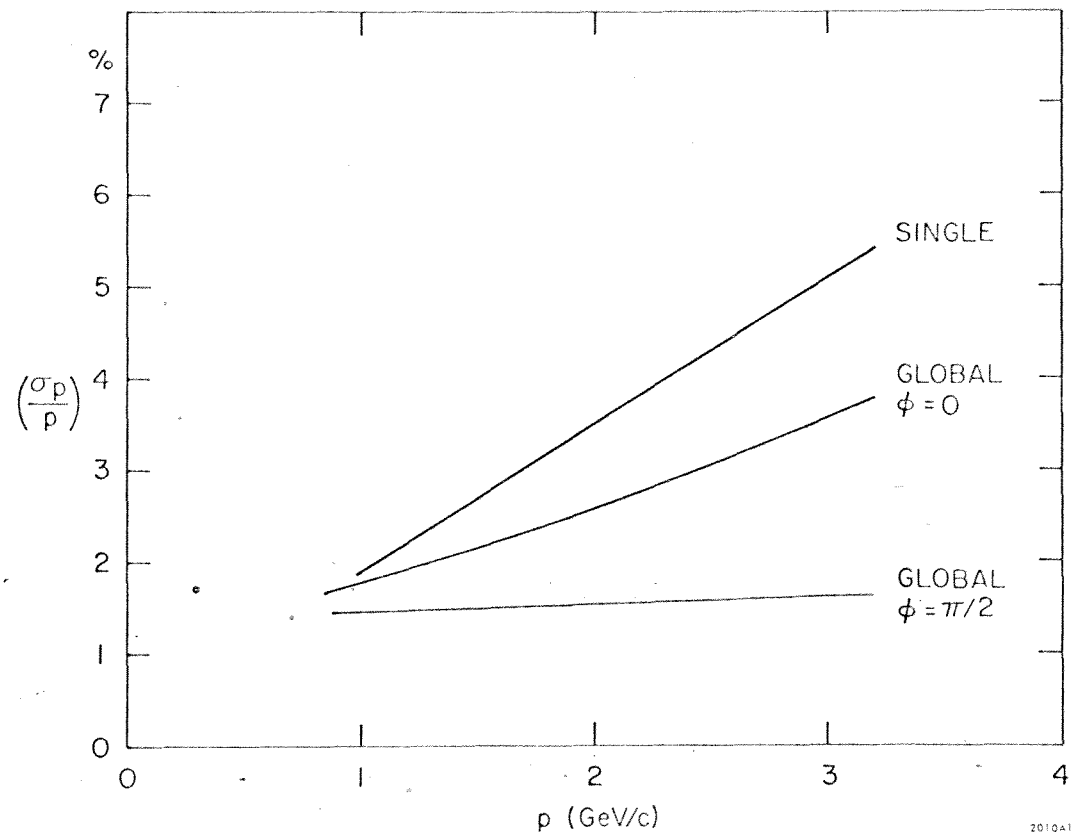

FIGURE 4

STANFORD UNIVERSITY

STANFORD LINEAR ACCELERATOR CENTER

Mail Address
SLAC, P. O. Box 4349
Stanford, California 94305

SLAC USERS BULLETIN NO. 26

October 4, 1971

SUMMARY OF TECHNICAL INFORMATION FOR SPEAR USERS

I INTRODUCTION

Within six months the first beam will be injected into the SLAC Electron-Positron Storage Ring Facility (SPEAR). This Users' Bulletin summarizes the features of the storage ring which are of greatest interest to experimenters who plan to make proposals to use this facility.

We have held to our previously announced schedule and expect to begin injections into the ring in April of 1972. With luck we expect around November 1, 1972 to make the major fraction of time on the storage ring available for experimental physics. During the 7-month tune-up period, tuning up the ring will take priority over all other uses of the facility. However, we expect that some time during the summer of 1972 we will be able to make some fraction of the running time available to experimenters to start setting up apparatus, checking backgrounds, etc. Our goal during the initial tune-up phase of operations is to get within roughly a factor of 5 to 10 of the desired luminosity. Further tune-up to reach the ultimate design parameters will proceed in parallel with the experimental program.

SPEAR operation is parasitic on the operation of the SLAC 20-GeV linac. The fill cycle of the storage ring is expected to require 20 linac pulses per second (out of 360) for about 5 to 10 minutes each hour. Since this is a negligible fraction of the total available SLAC beam time, we plan to operate the storage ring during the entire on-time of the accelerator (530 8-hour shifts this fiscal year). SPEAR is equipped with two interaction regions, and experience with the Italian e^+e^- storage ring (ADONE) indicates that we will

probably be able to operate with beams colliding at both interaction points simultaneously, thus allowing two experiments which can run at the same storage ring energy to take data at the same time.

II INTERACTION REGION

Collisions between the beams take place in two long straight sections which are located in special housings to allow sufficient clearance around the beam line for experimental apparatus. The geometry of these interaction regions is shown in Fig. 1. Clearance below the beam line is 10 ft. Above, the beam clearance is 15 ft. at the center of the interaction region shelter tapering down to 10 ft. at the sides of the shelter.

Figure 2 shows a detailed view of the center of the interaction region. The clear space along the beam at the beam pipe is 13' 4". We expect that electromagnetic backgrounds in the interaction regions will be sensitive to the geometry and the material of the interaction-region vacuum chamber. Initially we will have in each region an aluminum chamber of wall thickness of about 0.1 in. and diameter about 6 in. On the basis of the background measurements made with this system we will be able to evaluate the feasibility of special interaction-region vacuum chambers which may be required for some experiments.

One of the two interaction regions will be equipped with a large magnetic detector facility, now being designed by a SLAC-LBL collaboration. More details on this facility are given below. The second interaction region has no permanent apparatus planned for it. We have planned this interaction region to be used for a diversified program of experiments, each of limited duration. The services and facilities of the SLAC Experimental Facilities Department (magnets, power supplies, pool electronics, rigging, etc.) are available to SPEAR users on the same basis as other users of SLAC.

The SPEAR interaction regions are hazardous radiation areas and hence are closed to access both during the SPEAR filling cycle and during the entire period of time when beams are stored. Thus, that part of any experimenter's apparatus which is located inside the interaction-region shelter must be designed to run unattended.

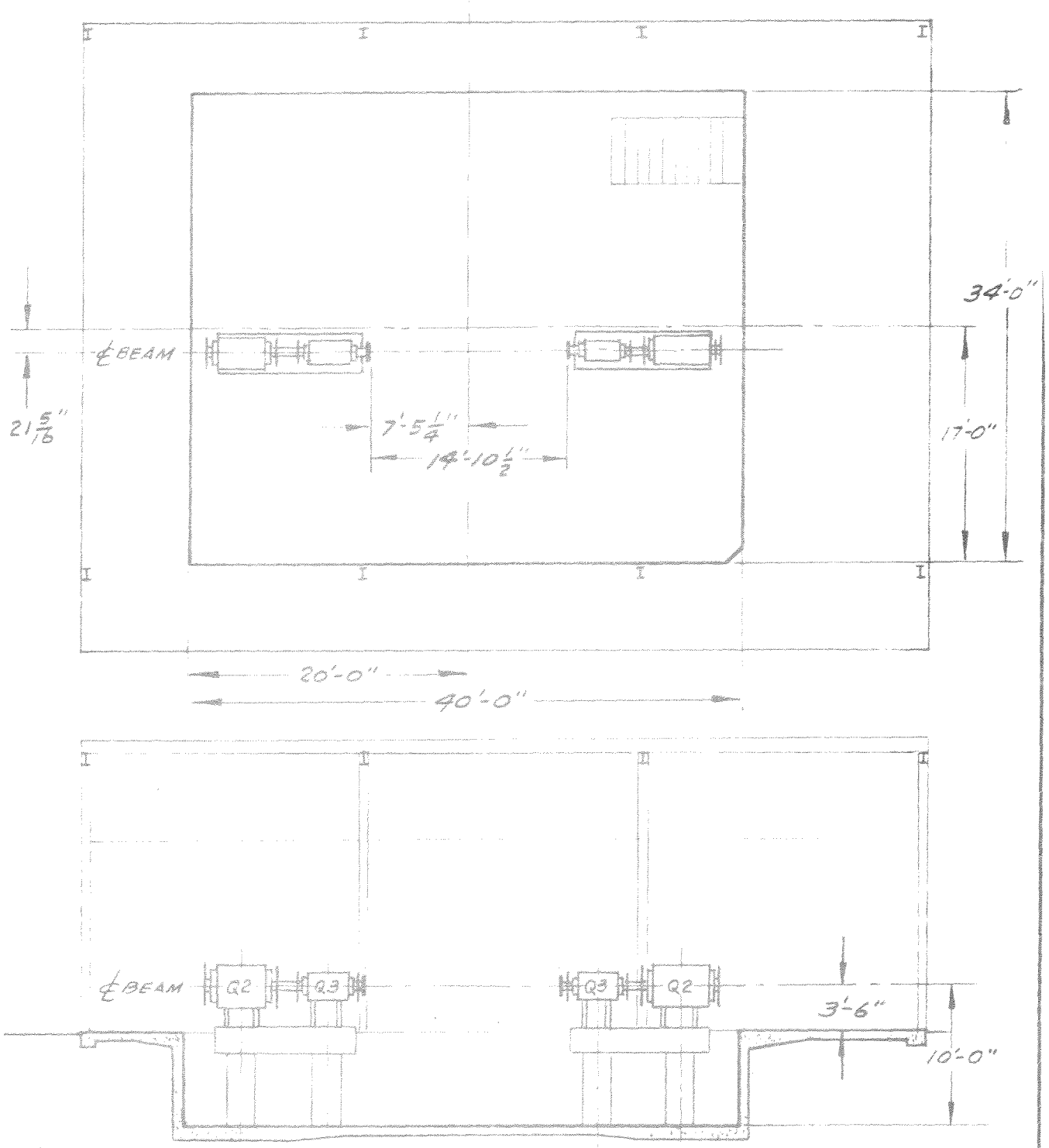

STANFORD LINEAR ACCELERATOR CENTER
U. S. ATOMIC ENERGY COMMISSION
STANFORD UNIVERSITY STANFORD, CALIFORNIA

ENGR. J. VOSS
DFTS. G. LEE 9-24-71
CHK. MV

APPROVALS

SPEAR – EXPERIMENTAL PITS AND SHELTERS

FIGURE 1

A

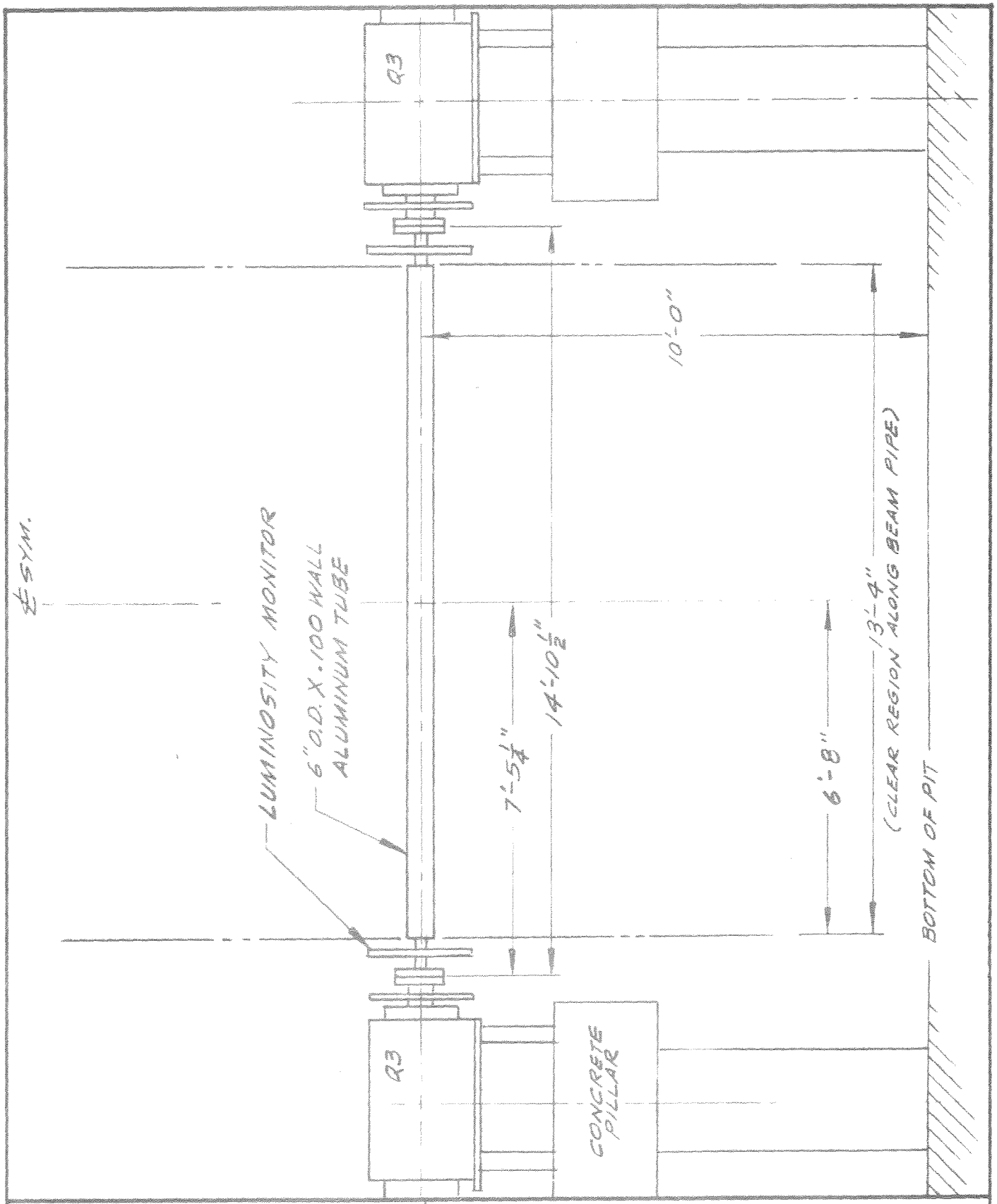

STANFORD LINEAR ACCELERATOR CENTER
U. S. ATOMIC ENERGY COMMISSION
STANFORD UNIVERSITY STANFORD, CALIFORNIA

SPEAR
EXPERIMENTAL PIT

ENGR. J. VOSS
DFTS. G. LEE 9-24-71
CHK. JMV

APPROVALS

FIGURE 2

A

SPEAR is equipped with an XDS Sigma-5 computer system which has been designed both to control the storage ring, and to be used by experimenters to log data and perform on-line data analysis. This computer system is described in more detail in Appendix I.

III BEAM PARAMETERS

1. Initial energy range: Tunable from E=1 to 2.5 BeV each beam. Operation to 3 GeV each beam is expected to be possible by mid-'73.

2. Design luminosity: The event rate produced by a cross section of σ (cm^2) is $R(sec^{-1}) = L\sigma$. L is energy dependent with a design maximum at E = 2 BeV of $L = 10^{32} cm^{-2} sec^{-1}$. Below 2 BeV, $L = (\frac{E}{2})^2 \times 10^{32}$ and above 2 BeV, $L = (\frac{2}{E})^3 \times 10^{32}$.

3. Beam dimensions: y is normal to ring plane and z parallel to beam. The standard deviations of x, $x' = dx/dz$, y, $y' = dy/dz$, z and E are expected to be:

E (BeV)	σ_x (cm)	$\sigma_{x'}$ (mr)	σ_y (cm)	$\sigma_{y'}$ (mr)	σ_z (cm)	σ_E/E (10^{-4})
1	0.32	4	0.008	2	5	2
1.5	0.32	4	0.008	2	9	3
2.0	0.32	4	0.008	2	14	4

Note that parameters of the beam overlap region, or "source", are derived from the beam parameters by multiplying by $1/\sqrt{2}$. The absolute beam energy will be known to ~1%. An alternative mode of operation of the SPEAR magnet yields a value of $\sigma_{x'} < 1$ mr while the other beam size parameters are unchanged. The value of $\sigma_{x'}$ listed in the table should be regarded as an upper limit consistent with the design luminosity, while the other parameters are roughly independent of the SPEAR operating mode.

4. Duty cycle: At a revolution frequency of 1.3 MHz, the "source" duty cycle is $\sim \frac{2\sigma_z}{c}(ns)/\sqrt{2} \times 10^{-9} \times 1.3 \times 10^6 = 1.8 \times 10^{-3} \frac{\sigma_z}{c}(ns)$.

IV LUMINOSITY MONITORS

We intend to equip each region with two types of luminosity monitor:

(a) a detector to monitor the 0° single bremsstrahlung radiation from e^+e^- interactions. This will be a relative monitor only and will have an ~10% background from gas bremsstrahlung when operating at maximum luminosity.

(b) a coincidence detector to monitor the $e^+ + e^- \rightarrow e^+ + e^-$ at a scattering angle of ~20 mr. The monitor is essentially free of background and will, at maximum luminosity, record at a rate of $\sim 10^3 \text{sec}^{-1}$. It is expected that initially, because of uncertainties in solid angles and efficiencies, that the absolute precision will be limited to 5-10%.

Any experiment attempting to measure an absolute cross section to better than 5% will have to devise its own monitor. Also, note that neither of the monitors provided will provide information on the geometrical size of the "source".

V STRAY MAGNETIC FIELDS

The question of how much magnetic field can be tolerated on the beam envelope in the interaction region is complicated. It is advisable that experimenters consult with SPEAR personnel about such effects. A couple of observations are instructive;

(1) An integrated transverse magnetic field (gauss-meters) of ~100p (BeV/c) will deflect the beams thru an angle comparable to σ_x and cannot be tolerated.

(2) Field gradients on the orbit must be very much less than ~300 gauss/cm which is the gradient in the quadrupole adjacent to the interaction region.

VI THE MAGNETIC DETECTOR

We are constructing a large solid-angle general purpose detector that will measure momenta and angles, discriminate between hadrons, muons and electrons,

provide time-of-flight information of value in determining the mass of low-momentum hadrons, and permit rough measurements of energies and angles of gammas. Detailed questions should be directed to SPEAR personnel.

1. Magnet: The magnet is a 3-meter diameter, 3-meter long solenoid with axis coincident with the $e^{\pm}$ beam and providing an axial field of 4 kG. The ends and external surface of the solenoid are enclosed in iron.

2. Track Chamber System: Within the solenoid we will have an array of cylindrical wire spark chambers uniformly distributed over the radius and each ~3 m long. Wire spacing is 24 per inch; half the gaps have purely axial wires and half have a small-angle stereo resulting in a spatial resolution along the field axis of 1 cm. This system will have a fractional momentum resolution of ±1.5% at 1 BeV and ±3.5% at 3 BeV.

3. Trigger Counters: Forty-eight 3-meter long scintillators will be mounted near the coil. These counters, in various logical combinations, provide the trigger. They subtend polar angles of $45^{\circ} \rightarrow 135^{\circ}$. They also provide the time-of-flight data; we hope to be able to do π-K separation up to a momentum of ~600 MeV/c and π-P up to ~1.5 BeV/c.

4. Shower Counters: Twenty-four sandwiches of 5 radiation lengths Pb interleaved with five 1/4" scintillator will be placed between the trigger counter and the coil.

5. Muon Tagging: Outside the coil there is 8" of iron serving as flux return and hadron filter. At the external surface of the iron we will have two gaps of wire spark chambers recording the position and angle of emerging track.

APPENDIX I

SPEAR COMPUTER SYSTEM

1. Introduction

We describe here the SPEAR computer system, an XDS Sigma 5, which is interfaced to the storage ring hardware and is considered as an integral part of the storage ring operating system. Specially built SLAC hardware allows this computer to control the storage-ring operating conditions as well as acquire data from the detectors at the interaction regions. All magnets can be automatically set according to desired beam parameters, such as energy or tune, and dynamic changes in operating points will be possible without losing the beams. This computer will also log data from one or more experiments, and is sufficiently powerful to provide considerable on-line analysis of the data. The time-sharing nature of the Sigma 5 allows several different users to be serviced concurrently; the hardware insures that bugs in one user program will not affect the other users. It is envisioned that the control program, each of the experiments, as well as one or more users debugging their programs will all run as independent time-shared jobs. Each user communicates with the Sigma 5 by a teletype, supplemented by a scope display system and special-purpose pushbuttons at the control and experimental stations.

2. Computer Characteristics

The SPEAR Sigma 5 can be characterized as a medium size, third-generation integrated circuit computer having the following characteristics:

A. CPU

32-bit word length organized in 8-bit bytes.
850-nsec cycle time.
48K words (K=1024).
16 priority interrupt levels.
Master/slave mode and privileged instruction traps (allows bug-free time sharing).
Fast floating-point hardware.
16 multiplexed input/output channels.
Direct input/output path for sending/receiving a full word of data.

B. Peripherals

Card reader	1000 CPM
Line printer	800 LPM
2-magnetic tape units	9-track, 800 bpi, 96 KBS
Control teletype	
Rapid-access disk	3 megabytes, 188 KBS
Disk-pack unit	24 megabytes, 312 KBS
3-user teletypes (more will be added)	

C. XDS-Supplied Software

Batch Time-Sharing Monitor (BTM), supporting time-shared users as well as foreground (interrupt) programs.

Fortran IV compiler
Metasymbol assembler
Loader
File manager
Utilities for copying from one device to another.
Time-sharing subsystems available at each terminal are

EDIT	for editing source code or data files on the disk.
FERRET	for manipulating files on disk.
FORTRAN	for compiling from a terminal.
SYMBOL	for assembling from a terminal.
LOADER	for loading jobs at a terminal.
RUN	for executing programs in a time-shared manner and being able to communicate with the program via the user's teletype.
BPM	for submitting jobs to the batch stream.
BASIC	

Other subsystems are described in the BTM manual.

3. SLAC-Built Hardware

The front-end hardware and the display terminals for the computer have been built at SLAC. The front end consists of the digital input and output multiplexers,

an analog input system, and a power supply control system (rate analog output). Standard TTL logic levels are used.

The following describes the characteristics of the front end hardware.

A. The Digital-Input System is used for reading data into the Sigma 5. This multiplexer is organized into 16 submultiplexer chasses, each having 16 input ports. Each input port can read 32 bits of data plus 8 bits of sense information. Hence, a total of 256 input ports at (32 + 8) bits/port can be read by the digital-input system. Three submultiplexers are wired to accept data from devices which already have multiplexed readouts, such as TSI scalers. The submultiplexers will be spread over the storage ring area to minimize cable lengths to the various devices. A hardware converter, 1-2-4-8 BCD to binary, is included in this system for reading in decimal devices such as TSI scalers.

B. The Digital-Output System is used for sending out data from the Sigma 5. This system can control up to 8 sub-units, where each sub-unit provides 60 output groups each having 8 data bits plus 2 control bits. Modular cards may be plugged into the chassis for each pair of groups to provide either pulsed outputs or dc levels or any special outputs as required. Only one sub-unit is being constructed at this time.

C. The Analog-Input System is used for reading analog data into the Sigma 5. This system consists of a 50-channel (expandable to 1000) Vidar 606 input scanner which switches guarded 3-wire inputs through reed relays, a Hewlett-Packard 3450A multi-function digitizer (ADC), and associated logic for the interface to the Sigma 5. Resolution is one part per million full-scale. DC volts and dc ratios are provided. Up to 14 readings per second are possible if range is unchanged and the normal (1/60 sec) integration time is used. DC voltages in the range 20 mV to 1000 V can be measured to an accuracy of 0.005%.

D. The Power-Supply Control System is used for sending out analog data from the Sigma 5.

This system provides analog output signals each of which has the capability of changing linearly with time at its own selectable rate. The selectable rates are obtained from a basic rate multiplied by factors ranging from 0 to 8191, giving one of 8192 possible rates for each analog output, including zero. Generally, these analog outputs control the output

currents of power supplies for the storage ring magnets. The computer loads the rates for all power supplies into the power supply controller such that operating conditions of the storage ring can be changed without losing the beam. The system presently has 25 such rate-analog outputs and is expandable to 64.

E. Display System

Three display oscilloscopes with separate controllers have been constructed. A total of four are planned, one (or two) for SPEAR operations, one for each experiment, and one for program debugging. Each display refreshes from a local 1024-word buffer, has hardware character and vector generators, and can plot points over 1024 x 1024 dot positions. The screen size is 8" x 8". Characters having a 10 x 14 dot size can be written at a rate of one every 28 μsec. A full-size vector extending 1024 dot positions can be written in 300 μsec; shorter vectors take less time. Each display station will have a display control panel to facilitate selection of various display programs.

4. Interfacing with CAMAC or Small Computer Systems

For experiments using standard CAMAC systems, a Branch Highway Interface complying with EUR 4600e specifications is under development. Simple crate controllers to couple scalers to the Branch Highway have been designed for scaler-only systems. Also developed are blind scaler readout systems that couple SAC blind scalers to the digital input system described above.

Computer-controlled experiments using a small digital computer for data taking can be interfaced readily to the digital input system provided the information flow is toward the Sigma 5. Handshaking (data interlocking) is provided at each of the 256 input ports if enabled by the program in the Sigma 5, allowing delay for interrupt or memory cycle time in the small computer. The 32-bit input word is large enough to handle any word size commonly used in control computers. For systems requiring extensive information to be passed from the Sigma 5 to the experimental computer, the system is less flexible. For small numbers of bits the digital output system can be used, but the lack of control of timing by the external equipment is a handicap for larger data flows. Because of the difficulty of predicting the exact needs of any particular experiment, we have not designed a general purpose computer-to-computer link. Such a link is best tailored to each situation, and can be designed readily once the needs are established. Of course, the CAMAC Branch Highway can be used as a link if the resulting data rates are acceptable.

DATE: 22 November 1972

SP1

TO : R. Larsen - Spokesman SP1, SP2

FROM : G. E. Fischer - Secretary to the PAC

SUBJECT: Approval of SP1, SP2

This note is to inform you formally of action taken by the Director upon the recommendation of the Program Advisory Committee, February 26, 1972, with respect to Proposals SP1 and 2.

Proposal SP1 - "The Checkout of the Magnetic Detector", was approved for 4 cycles. The luminosity for these cycles was not specifically identified but it was the understanding of the Committee that checkout could be performed at "low" luminosity at various energies and in parallel with checkout of another experiment in the East pit.

Proposal SP2 - "Survey of Multiparticle Final States in the c-m range 2-5 GeV" was approved for 2 cycles at running provided the storage ring was capable of delivering 1/5 of its "design"luminosity. The start of this physics program was to take place when the Laboratory had decided sufficient luminosity for a meaningful physics result had been demonstrated.

At the time these decisions were taken it had been the plan to run 7 "long" cycles per year. The arithmetic was as follows. Assuming 580 shift per year implied ~83 shifts per cycle ~660 hrs. per cycle. Assuming an accelerator efficiency of 75% and a SPEAR efficiency of 75%, it was expected that one cycle of SPEAR operation would net the experimenter about 330 hrs. per cycle.

You may therefore interpret the above listed approval as meaning an approval of 660 hrs. of running for SP2. Your request was for 1000 hrs.

Recent budget cuts have forced a reassessment of the Laboratory's scheduling policy. At this time I have not yet received instructions from the Director on what the definition of a SPEAR cycle or running time hour should be, nor has a decision as to when the physics program should start been taken. You will be advised on these matters as soon as these decisions are taken.

C.C. W.K.H. Panofsky
R. Mozley

• STANFORD UNIVERSITY • OFFICE MEMORANDUM • STANFORD UNIVERSITY • OFFICE MEMORANDUM • STANFORD UNIVERSITY • OFFICE MEMORANDUM

W. W. HANSEN LABORATORIES OF PHYSICS
STANFORD UNIVERSITY
STANFORD, CALIFORNIA 94305

Microwave Laboratory
High Energy Physics Laboratory

Telephone: (415) 327-7800

11 February 1974

Sp I

Dr. Gerhard E. Fischer
PAC Secretary
SLAC, P. O. Box 4349
Stanford, California 94305

Dear Gerry:

This letter is a follow-up to my letter of December 12, 1973 to Stanley Brodsky and relates to the interest of my colleagues and myself in the measurement of inclusive γ-rays and π^0 production at SPEAR-II.

When we last presented our Proposal SP-15 to the PAC in October 1973 for SPEAR-I, we suggested that this experiment would be even more appropriate at SPEAR-II than at SPEAR-I, and in my letter to Stanley Brodsky we stated our intention to present this experiment again to the PAC at some future meeting when definite action on second round experiments at SPEAR-II is likely to be taken. This seemed to be a much more sensible procedure than to present SP-15 at every PAC meeting until such action is taken. It has been my recent impression that definite action is still unlikely at the February 1974 meeting of the PAC. This is because the direction of the physics emerging from SPEAR-I is not widely known, the lead time is very long, and the PAC membership has changed.

I would like to restate that it is the intention of the HEPL group to resubmit SP-15 (in an up-dated form) for consideration by the PAC for SPEAR-II at the most appropriate meeting. I assume that you will be able to let me know in advance at which future meeting you would like to hear a new presentation.

Sincerely,

Barrie

E. Barrie Hughes
Research Physicist

EBH/gs