Version 1.6

SLAC Participation in ATLAS

Timothy Barklow, Rainer Bartoldus, Norman Graf, Steffen Luitz, Richard Mount, Amedeo Perazzo, Su Dong, Tracy Usher, Michael Woods, Charles Young

The Large Hadron Collider (LHC) will be the flagship high energy frontier facility for the next decade, with opportunities for major discoveries which could fundamentally change our understanding of nature. With the imminent startup of LHC in 2007, there are still many crucial tasks ahead to prepare the LHC experiments for first collisions. An initial contact with the U.S. West Coast institutions on the ATLAS experiment revealed several detector and computing projects that could benefit from the participation of SLAC. The SLAC facilities that can be potentially offered through this participation will also provide a much needed service to a significant portion of the traditional SLAC user community that is also involved in the LHC. In our subsequent contacts with the ATLAS management, subsystem leaders, and other US ATLAS collaborators we experienced a uniformly warm welcome for a possible SLAC participation in ATLAS. Among the various projects under discussion, a Tier-2 computing center at SLAC would fill a very serious need among the U.S. West Coast ATLAS institutions for physics analyses and detector work, which can very effectively utilize the SLAC computing facilities to serve this user community and ATLAS as a whole. The detector projects on the pixel vertex detector, high level trigger and simulation are areas with consistently expressed needs, which also happen to be areas where SLAC has considerable expertise, and which are closely connected with our interests in the International Linear Collider (ILC) detector work in many aspects. The physics at the LHC has strong synergy with the physics at ILC. This LHC participation also naturally provides a bridge to attract young people to join SLAC in the joint high energy frontier effort of LHC physics and ILC detector development. Given the many mutual benefits to ATLAS and SLAC, we believe that the participation of SLAC in ATLAS has very promising prospects as a new direction to significantly enhance the accelerator based physics program at SLAC leading to the ILC. In this document, we will describe the envisaged physics and detector involvements in some detail.

1. LHC Physics Program

A vigorous physics program at the LHC would be part of the SLAC-ATLAS effort from the outset. Such an endeavor would strengthen the vitality of the SLAC accelerator-based particle physics program, take full advantage of the theory departments of SLAC and Stanford University, and position SLAC as a highly attractive laboratory for students and post-docs wishing to pursue research in TeV scale particle physics. Given the vast range of physics opportunities at a new energy scale, there is always room for

contribution in fundamental aspects of the experiment, even for a late entry into the collaboration.

Before presenting a list of physics topics to be pursued, it is important to note that the physics of the LHC is strongly connected to other SLAC programs such as astrophysics/cosmology research and the ILC. Potential connections between LHC physics and astrophysics/cosmology include the discovery and study of the dark matter particle, the impact of the discovery of the Higgs boson on the development of cosmological theories with fundamental scalars, and new ideas for dark energy based on major breakthroughs in the understanding of TeV scale physics.

The potential synergy between LHC and ILC physics is well-documented. Participation by SLAC in the LHC program would help to realize the connections between these programs. On the one hand, it will bring insights from the ILC physics studies that might already be useful in the more difficult environment of the LHC. On the other hand, it will allow us to obtain a detailed understanding of the evidence presented by the LHC on new physics, one that will clarify the goals and the challenges for the ILC experiments. It is likely that a decision to construct the ILC would be motivated by physics discoveries at the LHC. For this reason alone, it is important that SLAC give whatever assistance it can to the LHC experiments in their early stages of commissioning and data analysis.

Finally, there is a connection between the analysis of LHC data and SLAC's role in support of its user community. The U.S. ATLAS organization has chosen LBNL to be one of three U.S. ATLAS physics analysis centers. SLAC can support LBNL in this function, e.g. by continuing to host *BABAR* physicists while they transition to ATLAS, and by our Geant4 experts supporting simulation work.

1.1. Standard Model Physics

The measurement of Standard Model (SM) processes forms the bedrock of all physics analyses at the LHC. Only after the response of the ATLAS detector to SM processes is thoroughly understood can the collaboration lay claim to discovery. In addition, when precision measurements are made of new particle masses and couplings, the systematic error due to uncertainties in the rate of SM background may come to dominate the total error.

Standard Model physics encompasses QCD, W/Z boson production, top quark production, *b* & *c* production in jets, characterization of underlying events and minimum bias events, and the extraction of the proton parton distribution functions (pdf). There remain challenges in the next-to-leading order calculation and simulation of many SM processes at the LHC, and close cooperation between experimentalists and theorists will be required to resolve some of these issues; SLAC is in a unique position to facilitate this kind of activity. Top quark production is interesting in that it will be used both to calibrate the detector and to measure top quark properties with unprecedented accuracy. Although SLAC has little experience parameterizing minimum bias events and extracting pdf’s at a hadron machine, the laboratory has a long history measuring proton pdf’s in electron-proton scattering, and participation in this activity by SLAC personnel might

bring a fresh perspective to the problem. The effective use of heavy quark tagging in the SLD experiment should also be a useful experience to be brought into the LHC environment.

The study of SM physics is important and should not be viewed as just service work for the ATLAS collaboration. A full understanding of SM processes in the early running is crucial for identifying genuine new physics. In this regard the early discovery of new heavy colored particles (such as squarks and gluinos) is an interesting challenge for the first year or two of running. The signatures of such new particles are events with multiple high-energetic jets, with or without missing energy. The main burden will be to show that these events are not being generated by complicated SM processes. This will require not only an excellent understanding of the detector but also well devised analyses to reliably measure the SM background. The effort would benefit from an intelligent real-time strategy utilizing detector alignment and calibration, iterative analyses of SM processes in early LHC data, and constraints from HERA and the Tevatron. Our involvement in understanding the Standard Model could be an effective contribution leading to a convincing discovery of the new heavy colored particles at LHC.

1.2. Supersymmetry

If SUSY is discovered at the LHC, SLAC will play a major role in analyzing LHC data for the purposes of establishing SUSY, measuring electroweak-scale parameters, and discovering the source of supersymmetry breaking. As such, SLAC will make all necessary preparations to put itself into a position to pursue detailed SUSY studies at the earliest possible date. During the course of these preparations niches may be identified where special emphasis may be placed, but the intention is to be prepared to pursue research in all areas of supersymmetry phenomenology.

1.3. New Physics with Multiple *b*-Tags

From the standpoint of maximizing the impact of our group's detector work on physics analyses, we intend to systematically study final states with multiple *b*-jets, which will be very sensitive to *b*-tagging performance due to the multiple *b*-tags that are typically required. Our involvement with the pixel detector and the tracking effort will be part of the foundation leading naturally to work on the *b*-tag algorithms. Such hadronic multi-jet final states also require careful attention and creativity with respect to the trigger in order to maximize the physics sensitivity. Some potentially interesting Higgs physics can emerge from analyses in this case:

- MSSM bbH/A (H/A$\rightarrow bb/\tau\tau$): While bbH/A production is not a competitive channel for Standard Model Higgs discovery, a significant fraction of the allowed phase space at large $tan\beta$ for the MSSM has a strongly enhanced bbH/A production rate and at the same time a suppressed H/A coupling to top and W/Z. b/τ tagging at the analysis level and possibly with the high level trigger, as well

as the optimization of 4-jet triggers, will be crucial for preserving this characteristic MSSM signature.

- *tt*H (H→*bb*): Although most of the current Standard Model Higgs search effort is concentrated on H→$\gamma\gamma$ and vector boson fusion analyses, the analysis through the *tt*H (H→*bb*) channel is also competitive in sensitivity, and it is important in any case to verify the top Yukawa coupling through this mode. The reconstruction of the top decays and the Higgs decay again involves 4 *b*-quarks in the final state.
- MSSM H→*hh*: This is obviously a very interesting decay and potentially observable with both Higgs bosons decaying into *bb* in a significant fraction of the allowed MSSM scenarios. The *b*-tag and 4-jet trigger configuration are again key experimental tools. An interesting additional function of this analysis is that it can be adapted to search for the possible production of Kaluza-Klein graviton in extra dimension models, also decaying into *hh*, with a characteristic spin-2 angular distribution.

These analyses, as well as many of the analyses mentioned in previous sections, will also require work on jet energy reconstruction, which may benefit from the detector work going on at SLAC on particle flow reconstruction for the ILC detector design. Although we concentrated on the possibilities on the Higgs physics in this section, there are other new physics possibilities such as squark and gluino productions in a variety of SUSY scenarios which could have multiple *b* quarks in their decay chains.

2. ATLAS

2.1. The ATLAS Detector

Details of the ATLAS detector can be found in the ATLAS Technical Proposal[1]. It has the following brief description of the detector.

> The ATLAS Collaboration is building a general-purpose pp detector which is designed to exploit the full discovery potential of the Large Hadron Collider (LHC). Many of the interesting physics questions at the LHC require high luminosity, and so the primary goal is to operate at high luminosity (10^{34} cm^{-2} s^{-1}) with a detector that provides as many signatures as possible using electron, gamma, muon, jet, and missing transverse energy measurements, as well as b-quark tagging. The variety of signatures is considered to be important in the high-rate environment of the LHC in order to achieve robust and redundant physics measurements with the ability of internal cross-check. Emphasis is also put on the performance necessary for the physics accessible during the initial lower luminosity running (10^{33} cm^{-2} s^{-1}), using more complex signatures such as tau-lepton detection and heavy-flavor tags from secondary vertices.

[1] ATLAS Technical Proposal for a General-Purpose pp Experiment at the Large Hadron Collider at CERN, CERN/LHCC/94-43.

Finally, the detector is conceived for assured performance even at the highest possible luminosity (in excess of 10^{34} cm^{-2} s^{-1}) which ultimately could be delivered by the LHC.

The overall detector layout is shown in Fig. 1. The magnet configuration is based on an inner superconducting solenoid around the inner detector cavity, and large superconducting air-core toroids consisting of independent coils arranged with an eight-fold symmetry outside the calorimetry.
The inner detector is contained within a cylinder of length 6.80 m and radius 1.15 m, with a solenoidal magnetic field of 2 T. Pattern recognition, momentum and vertex measurements, and enhanced electron identification are achieved with a combination of discrete high-resolution pixel and strip detectors in the inner part and continuous straw-tube tracking detectors with transition radiation capability in the outer part of the tracking volume.

Highly granular Liquid Argon (LAr) electromagnetic (e.m.) sampling calorimetry with excellent performance in terms of energy and position resolutions covers the pseudorapidity range $|\eta| < 3.2$. In the end-caps the LAr technology is also used for the hadronic calorimeter, sharing the cryostats with the e.m. end-caps. The same cryostats also house the special LAr forward calorimeters which extend the η coverage to $3.2 < |\eta| < 4.9$. The whole calorimeter system contributes to the very good jet and E_T^{miss} performance of the detector.

The calorimetry is surrounded by the muon spectrometer. The air-core toroid system, with a long barrel and two inserted end-cap magnets, generates a large field volume and strong bending power with a light and open structure. Multiple scattering effects are therefore minimal, and an excellent muon momentum resolution is achieved with three stations of high-precision tracking chambers. The muon instrumentation is complemented with fast trigger chambers.

The muon spectrometer defines the overall dimensions of the ATLAS detector. The outer chambers of the barrel are at a radius of about 11 m. The length of the barrel toroid coils is ±13 m, and the third layer of the forward muon chambers, mounted on the cavern wall, is located at ±21 m from the interaction point. The overall weight of the ATLAS detector is about 7000 tons.

2.2. ATLAS Computing Model

LHC computing is organized as a multi-tier system.[2] CERN is Tier 0, in the U.S. Brookhaven National Lab (BNL) is the ATLAS Tier 1, and approximately 5 or 6 mainly

[2] ATLAS Computing TDR, CERN-LHCC-2005-022.

university-based sites will make up Tier 2. Each Tier 2 site will serve a community of several "Tier 3" sites which are simply university HEP groups with their traditional level of local computing support.

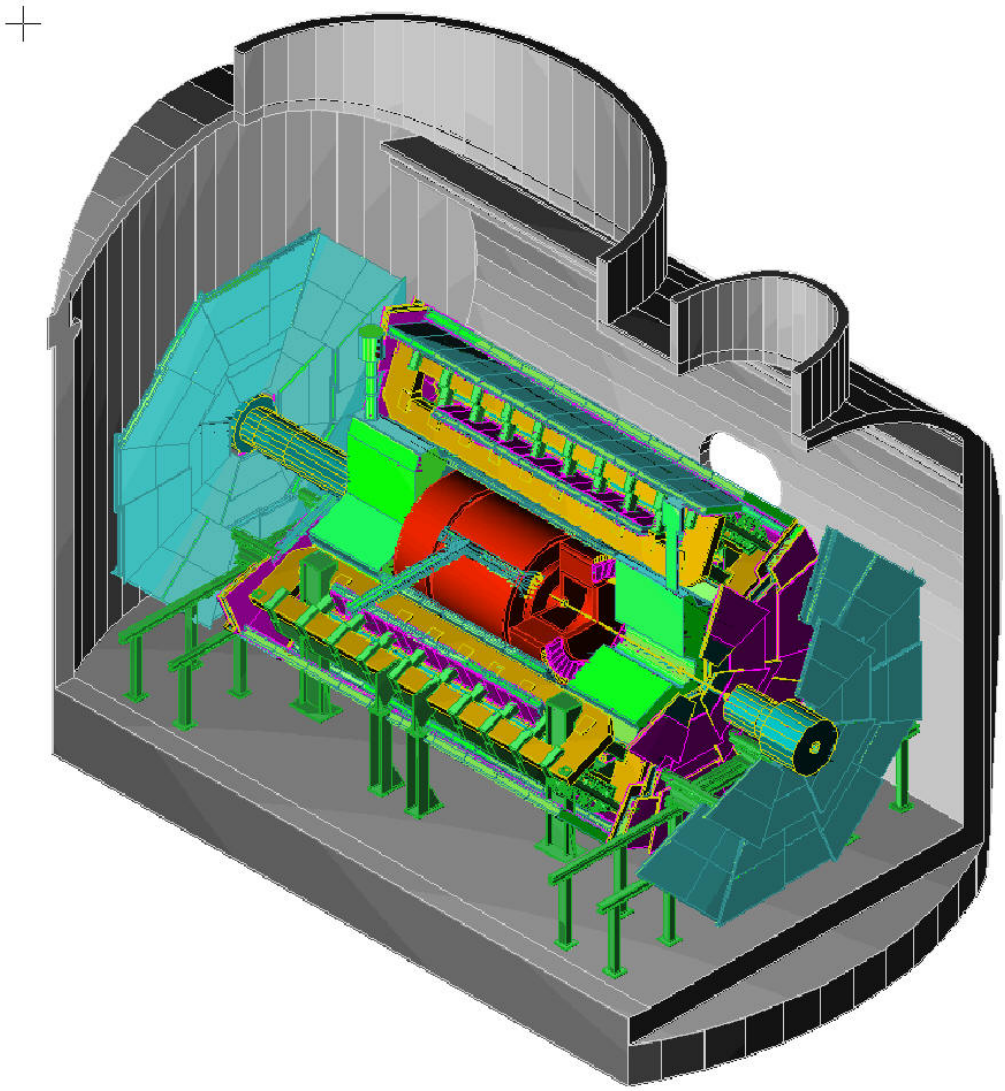

Figure 1: Cut away view of the ATLAS detector in the cavern

3. Proposed Areas of Participation

Our proposed areas of involvement need to address the needs of ATLAS as well as the interests of SLAC. We have spoken with the management of ATLAS, the management of U.S. ATLAS, system managers, and many ATLAS collaborators. We have received strong encouragement to join. There is broad consensus of where SLAC could make the greatest contribution.

We are cognizant of the Lab's existing commitments. In particular, *BABAR* is scheduled to take data through 2008 with analysis continuing beyond that, and the ILC is the Lab's longer-term focus for beam-based particle physics. We believe that an involvement in ATLAS can be structured to be a major source of physics productivity in the interim period, have minimal impact on other projects, and indeed support the existing commitments by leveraging commonalities. The participation in an LHC experiment will especially provide valuable experience for future ILC collaborations and attract young people to SLAC for the joint high energy frontier activities of exploration of LHC physics and building a future experiment at the ILC.

SLAC's participation in ATLAS should be consistent with its role as a national laboratory. The commitments and responsibilities should be on an appropriate scale, and the support of its users must be an integral part of that involvement.

Construction of the ATLAS detector is near completion. We should emphasize installation, commissioning, support of the user community, and physics exploitation.

Although the involvement in LHC detector upgrades has been brought up as a possible SLAC contribution, the current discussions with ATLAS have clearly indicated that help on the initial startup of LHC is of higher priority at present. This also provides more flexibility when balancing ILC and LHC commitments in the future. However, it does not preclude future involvements in ATLAS detector upgrades if SLAC involvements were to expand. We therefore propose working on the following areas with most immediate needs leading to the 2007 startup of data taking:

- Pixel detector and tracking.
- Trigger and Data Acquisition (TDAQ).
- Simulation and specific computing infrastructure support.
- Tier-2 Computing Center.

It should be emphasized that these topics complement one another, and will serve us well when we enter the physics exploitation phase. They build upon our past experience and future interests, and they utilize our core competence. The commitments are substantial as one would expect for a national laboratory; however, they are also sufficiently flexible to allow proper balancing with other projects in the Lab. Details of the proposed involvements follow.

It is expected that commitments will change over time. We will be active in physics analysis. Indeed, physics exploitation will likely be a dominant activity after data taking has started. We will evaluate participation in detector upgrades. In addition, individuals may serve in leadership positions.

3.1. Pixel Detector and Tracking

A brief description of the pixel detector, illustrated in Fig. 2, can be found in the Inner Detector TDR[3] and the Pixel Detector TDR[4]:

> The pixel detector system provides critical tracking information for pattern recognition near the collision point and largely determines the ability to find secondary vertices. The pixel system provides three or more space points over the complete acceptance of the Inner Detector, $|\eta| < 2.5$. The innermost pixel layer, the B-layer, is located as close as possible to the interaction point to provide the optimal impact parameter resolution. The B-layer will operate for about three years at reduced luminosity, 10^{33} cm^{-2} s^{-1}, followed by about one year at the LHC design luminosity before replacement is required. The two other barrel layers and the disk layers are located at radii greater than about 10 cm, for which the useful lifetime is expected to be about seven years at design luminosity. Four disk layers on either side of the interaction point are required to provide full coverage for $|\eta| < 2.5$.

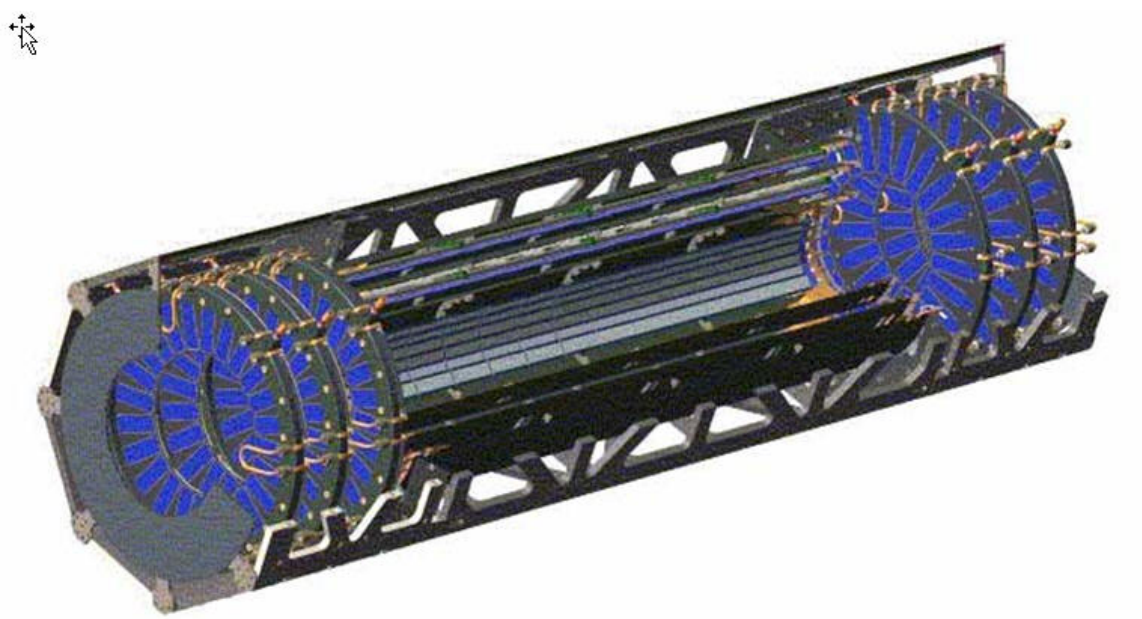

Figure 2: The pixel detector

The pixel detector is the last detector to be installed. Module testing is on-going. Final assembly at CERN and clean-room testing are expected to continue through the summer of 2006. Installation of the pixel detector into ATLAS is scheduled to start in late 2006, followed by commissioning. LBNL and UC Santa Cruz have central roles in the pixel detector and the semiconductor tracker (SCT) respectively. This local connection will make it easier for the SLAC participation to be effectively integrated to further strengthen

[3] Inner Detector Technical Design Report, CERN/LHCC 97-16.
[4] Pixel Detector Technical Design Report, CER/LHCC 98-13.

the tracking system. We anticipate participating in many of the following activities related to the pixel detector.

- *Module testing and debugging at LBNL:* There are a small number of disk modules and a larger number of barrel modules waiting to be tested. There are modules with various problems that need to be debugged and repaired. This will provide valuable experience for the final testing and commissioning phases at CERN.
- *Final assembly, testing, installation and commissioning at CERN:* We plan to have several people at CERN starting in 2006 as the activities there ramp up in early 2006. The hands-on experience will be important knowledge for the work to follow in utilizing the detector for physics.
- *Detector simulation:* The current simulation program has made some simplifying assumptions to facilitate its development. We are working on improvements to the code, such as a more realistic ionization model and electronic response.
- *Calibration and alignment:* The development work can draw upon our experience with the SLD vertex detector and the *BABAR* silicon vertex tracker. The tracking alignment for 3 types of tracking devices in the inner detector with barrel and endcap systems is expected to take extensive effort to accomplish. The alignment calculations may also have to be done frequently, and will take advantage of the Tier-2 computing center at SLAC.
- *Integrated tracking in the Inner Detector:* The ATLAS Inner Detector consists of 3 components with the straw tube Transition Radiation Tracker at outermost radius, followed by the SCT and pixel vertex detector at inner radii. The UC Santa Cruz group and the Indiana group have responsibilities for SCT and the straw-tube detector respectively. Working together at a common computing center will facilitate the crucial task of integrating them and the pixel in reconstruction.
- *b-tagging:* The pixel detector and tracking work will naturally evolve to physics tools utilizing the pixel detector, in particular *b*-tagging. We have extensive experience in developing advanced vertexing and *b*-tagging algorithms at SLD. The University of Washington group and others are interested in *b*-tagging, and we see the SLAC Tier-2 center supporting our joint activities.

In addition, the work with the ATLAS pixel detectors will also provide valuable experience and develop additional expertise for our likely role in designing the vertex detector and the tracker for the Linear Collider detector.

3.2. Trigger

The trigger system is a vital first step for LHC physics. Its configuration and performance optimization will have strong impact on the eventual physics reach of many analyses. The ATLAS trigger system[5] consists of a hardware Level 1 trigger (LVL1), followed by the software High Level Triggers (HLT) in two stages with Level 2 trigger (LVL2) and Event Filtering (EF) running on Linux PC farms. LVL1 utilizes calorimeter

[5] ATLAS High-Level Trigger, Data Acquisition and Controls Technical Design Report, ATLAS TDR-016.

and muon detector information at coarse granularity to generate level 1 triggers up to 75kHz. The LVL2 collects the partial readout detector data, including tracking data, from the regions of interest (ROI) pointed to by the level 1 trigger signals, to make improved selection based on reconstruction at full granularity in the ROI to reduce the rate to below 2 kHz. The EF performs reconstruction of full events to further refine the selection in order to limit the data logging rate to <200 Hz.

From the discussions with the ATLAS trigger/DAQ system management and many other people in ATLAS, a very consistent message was that there are high priority needs in the high level software trigger systems where newcomers are very much welcome. The LVL2 system in particular has tightly coupled dataflow issues and code performance demands which could benefit from experience on previous experiments. From the observations of ATLAS meetings and from direct discussions, it is clear that many of the issues have very familiar appearances as the problems we addressed on *BABAR* and previous experiments at SLAC. Several key people at SLAC with extensive experience on DAQ and trigger are potentially available to join the ATLAS effort; we should be able to make a substantial contribution in this area.

Some specific areas were outlined by the HLT system manager as areas of significant needs for enhanced efforts:

- *Trigger core software development:* The HLT software adopted an ambitious strategy of using the same framework for the software trigger and offline. This online/offline software integration relies on coherent design, test platform and high performance coding. Possible involvements include trigger configuration and algorithm control system, trigger monitoring framework and strategy, offline/online software integration, and scalability of the communication mechanism between the large number of trigger processors and online database.
- *Trigger selection algorithms:* The trigger menu and strategy are still in the development stage with a wide range of possibilities. The effort here clearly has very direct coupling to the physics reach for many analyses. In the area of algorithm development and performance evaluation, among the many groups which can benefit from new manpower, there are particular needs of increased effort on jet/τ/E_T^{miss} triggers. There are also investigations which can lead to potential improvements in the algorithms utilizing the pixel information for jet z vertex tag to suppress pileup effects. Improved *b*-tag and τ triggers could bring significant versatility to the HLT system, enabling highly selective triggers on jets at the interesting energy range for many electroweak processes which would otherwise be unaffordable due to bandwidth limitations. SLAC participation in both trigger and pixel projects will allow a more coherent contribution in this area. The preparation and adaptation of a set of algorithms and procedures for the initial cosmic and early beam runs also need special attention.
- *Commissioning:* There is considerable lack of effort in this area and there is room for major involvements and responsibility. The operational and commissioning experience of *BABAR* and other experiments at SLAC are certainly very much relevant and valuable expertise. There is much planning and building up of

performance monitoring tools to be done. The commissioning effort starts with a fraction of the system as a 'pre-series' and expanding to the full system to lead up to the first collision.

The investigation of exact areas on involvement among these possibilities is still in progress, but they are clearly a good match to the existing SLAC expertise. Although most of these areas would like to have new effort soon, the expected ramp up of potential SLAC involvement at various times during 2006 for different people are still compatible with the needs of continued increase of intensity of activities all the way up to the 2007 startup and beyond. This trigger effort can also effectively use the Tier-2 center as a base hosting the trigger study samples and software development, collaborating with UC Irvine and other groups as part of the west coast community.

3.3. Simulation and Infrastructure Support

A realistic detector response simulation is important not only for full physics exploitation but is absolutely critical to the commissioning of a new detector. Understanding the effects of misalignment and dead or miscabled readout electronics will only be possible in a timely manner if these effects can be quickly and accurately simulated. The ATLAS computing management has suggested the following as areas where SLAC can contribute:

- Parameterizing the electromagnetic component of showers.
- Detailed as-built geometry of the ATLAS detector.

Geant4 can simulate electromagnetic calorimeter response extremely well by following shower particles down to low energies. However, this is very CPU-intensive. Earlier attempts at parameterized showers in general have not been successful except when the detector is uniform and homogeneous. The development to get around this limitation is made by the Geant4 core developers at SLAC. They will mentor users in the use of the new tools, and give guidance in tuning parameters. Parameter tuning requires a large number of simulated events for many combinations of parameter values, and the time needed for tuning will depend on the computing power available. The proposed Tier-2 center at SLAC will be of great help. This new tool and the experience in using it will no doubt be useful for the ILC.

The ATLAS simulation program so far assumes a largely idealized detector. It is important to be able to study the as-built geometry, and real-life imperfections such as dead channels and realistic detector material. There is experience on similar developments in *BABAR* and in Linear Collider detector simulation that can be applied. Encoding and studying the effects of the actual detector positions and topologies is a job that is best done by individual system experts, so our close association with LBNL and UCSC would ensure a fast turnaround in the pixel and silicon microstrip detectors.

The ATLAS simulation program is based on the Geant4 package, and SLAC is in a strong position to help.

- SLAC has a strong team of Geant4 core developers, including the Deputy Spokesperson for Geant4, the hadronics package coordinator and other core developers.
- We have much experience in developing applications using Geant4. *BABAR* is the first particle physics experiment to adopt Geant4. The ILC detector simulation has also used Geant4 extensively. Detailed studies by these experiments have led to many improvements in the kernel.

UC Santa Cruz has a lot of expertise in Geant4 and much experience in simulation, e.g. on *BABAR*. We expect to work closely with them, and to support their activities at the proposed Tier-2 center. This work would dovetail very nicely with the studies that will have to be conducted for the silicon microstrip tracking detector envisaged for the ILC Silicon Detector.

A searchable and archived on-line discussion forum is invaluable for communication in large, distributed collaborations. *BABAR* has had very positive experience with HyperNews, and the Linear Collider detector has similar experience with its forum, hosted at SLAC. We are currently hosting at SLAC a temporary HyperNews forum for ATLAS, and are working with CERN to deploy production servers for both ATLAS and CMS. It is expected that production discussion forums will be managed centrally by ATLAS, and SLAC will continue to contribute by maintaining the package, as we have done for many years. This effort benefits all of SLAC's HEP involvement: *BABAR*, ATLAS and ILC.

Benefit to SLAC

The experience gained confronting the realities of a detector will be extremely important in the design of detectors for the Linear Collider. Comparisons between ideal and as-built geometries will be useful when making design choices and will no doubt guide the selection of detector technologies. Improvements to the core Geant4 kernel as a result of comparisons between simulation and actual data will further strengthen the validity of detectors designed with Geant4 for the Linear Collider.

3.4. An ATLAS Tier-2 Center at SLAC

U.S. ATLAS plans to have ~5 Tier-2 computing centers. Three have been selected: the Midwest Tier 2, the Northeast Tier 2 and the Southwest Tier 2. A call for proposals is expected in early 2006 for the remaining ones, and SLAC will submit a proposal.

The Role of a Tier 2

The role of Tier 2s is not rigidly defined – physics analysis, simulation and, for some Tier 2s, calibration, are mentioned in the ATLAS Computing TDR. The Tier-2 advantage

over centralization is expected to be the engagement of local financial or in-kind resources, and their engagement of a constituency of physicists who can benefit from access to a responsive physics analysis resource over which they have significant influence.

The Scope of a Tier 2

U.S. Tier 2s will receive a similar level of aggregate DOE/NSF support to that provided to the Tier 1. This translates into $600k per year per Tier 2 for hardware, software and people. The leveraging that SLAC can provide remains to be decided. As *BABAR* analysis winds down, some of those funds are potentially available. It can make a substantial impact on the normal Tier 2 funding, and turn this Tier 2 site into the premier Tier 2 in support of ATLAS physics.

Three Tier 2 sites were selected by U.S. ATLAS in 2005, and at least one more will be selected in 2006. Table 1 is their planned ramp-up through 2009. CPU is in units of 1000 SPECint2000, and disk is in units of TB. The site-to-site variation is due to different levels of local resources that are leveraged. The amount of hardware is larger than most university groups typically deal with. Indeed, all three Tier 2s are operated by consortia of universities. On the other hand, the hardware is modest compared with what SCCS currently operates. Furthermore, SCCS has invested significant resources to allow centralized maintenance and lights-out operation that will make the job of integrating additional hardware much easier than it would be in a typical university environment.

Table 1: Hardware ramp-up plan at existing Tier 2 centers.

		2005	2006	2007	2008	2009
Northeast						
	CPU	210	350	730	1090	1600
	Disk	40	170	370	480	630
Southwest						
	CPU	500	900	1500	1700	2100
	Disk	60	200	380	540	700
Midwest						
	CPU	360	510	900	1100	1300
	Disk	50	130	260	465	790

Benefit to SLAC

Why would we want to run a Tier 2? The role of Tier-2s is not totally clear, and the expected funding level for each Tier-2 is modest. It could be a challenge to make a significant impact with the level of funding from U.S. ATLAS.

Challenges are what we thrive on. The role of Tier-2s is, to say the least, malleable. This gives us an opportunity to create a role for SLAC that embodies our vision of how

physics analysis should be supported. The SLAC Tier 2 should do more than contribute computing power and storage to the US ATLAS ensemble. The Tier 2 should be a focal point for the development of new analysis approaches that may interact strongly with the computing and data access resources. SLAC is extremely well placed to prosper in this role. By adopting an aggressive approach to trying new approaches in physics analysis we have shown that we can attract DOE computer science funding at a similar level to expected Tier-2 funding. The scientific excitement of LHC physics and the evident challenges it poses for data-intensive computing can be used to attract non-HEP funds to the long-term benefit of SLAC and U.S. HEP.

In this light, a SLAC Tier 2 can be seen as an integral component of SLAC's strategy to be a leader in data-intensive computing aligned with its scientific mission.

The Tier-2 will also maintain and strengthen SLAC as the intellectual center of an experimental HEP community. Although the location of computers does not dictate the intellectual center of gravity of the physicists that use them, the same tight coupling between the design, operation and exploitation of computing systems that has benefited *BABAR* physics will benefit LHC physics. This applies both to physics analysis and to the calibration of major detector subsystems such as the pixel detector. Because SLAC has the intellectual power to apply computing to physics in novel and productive ways, SLAC's evolving university community will be drawn tightly together. This view is strongly reinforced by informal contacts with Western U.S. ATLAS physicists both within and outside the current SLAC community.

A joint *BABAR* and ATLAS center can be more than the sum of the parts. In addition to the economy of scale in operations and maintenance, the peak demands for the two experiments, before LHC turn on, are likely to differ in time. *BABAR*'s needs fluctuate with conference schedule, while ATLAS has no such constraint. The resources earmarked for one experiment but remaining unused during a lull can be made available to the other experiment, resulting in greater utilization efficiency of the hardware. Tools are in place to manage this allocation so an experiment will not be deprived of its rightful share when it is needed.

Benefit to ATLAS

SLAC is committed to a vigorous program of science that is expected to place continued demands to provide large-scale data-intensive computing. Until at least 2012, the analysis of *BABAR* data will be the dominant activity at SLAC. The planned increase in the *BABAR* data sample will drive major investments in *BABAR* data analysis facilities through 2008 and the maintenance of these capabilities through at least 2012. The computing being installed for SLAC's Particle Astrophysics and Cosmology program is already close to the level of a Tier-2 in terms of hardware, and in some plausible scenarios could grow to the cost-scale of *BABAR* computing in the coming decade. Even GLAST computing is significant on the Tier-2 scale. The computing needs of the LCLS program are in an early stage of evaluation, but will certainly be significant on the Tier-2 scale.

It thus seems certain that the combined scientific computing activity at SLAC will remain much larger than the Tier-2 itself for the foreseeable future. SLAC will therefore be able to deliver Tier-2 computing to ATLAS with excellent cost-effectiveness and reliability. The marginal manpower costs of running the Tier-2 hardware will be minimal. The hardware will just be more of the same that is purchased for other aspects of SLAC computing. Even the Grid software that will be needed to function in the U.S. ATLAS environment will not cost significant extra effort because SLAC is already a full member of the Open Science Grid that will serve US LHC. Unusually for a Tier 2, SLAC will be able to provide a mass storage system at the cost of the tapes used by ATLAS, thus amplifying the usefulness of the disk storage provided with Tier-2 funds. SLAC keeps its scientific computing systems available 24 hours a day and 365 days a year through adequate engineering and the out-of-hours efforts of an enthusiastic staff. We can confidently offer this level of support to ATLAS.

The largest benefit to ATLAS may well be the counterpart of the benefit to the SLAC Scientific Computing program. In collaboration with Western U.S. ATLAS partners, SLAC will tune its computing systems to optimize ATLAS data-access performance and will also explore new ways to use computing for ATLAS analysis. SLAC will seek non-ATLAS funds make general advances in data intensive computing that will be highly relevant to ATLAS. The PetaCache project, an example of SLAC's attraction of non-HEP funding, is itself likely to be of direct relevance to LHC physics analysis. An important aspect of this project is to demonstrate the impact on real-life applications. The project can provide partial support for ATLAS personnel to participate in application development and testing. SLAC also intends to exploit the synergies between the many data-intensive parts of its science program such that, for example, work done to develop novel data analysis approaches for astronomy can also benefit the experimental HEP program and ATLAS.

Finally, SLAC is in the ideal location to bring a geographic balance to U.S. ATLAS Tier-2 facilities. Time zones are an important impediment to the formation of closely-coupled analysis activities and there is an expressed desire from existing "Pacific Time" members of ATLAS for a Tier-2 center in their time zone.

Computing Infrastructure Needs

The Tier 2 will need power, cooling and space. Could this need be the last straw that triggers a need for a massive investment in infrastructure? We note that the computer center currently consumes 1 MW and that a consultant's report puts 2 MW as the limit achievable with under-floor forced air cooling. Floor space and power (from the existing substations) are likely to be sufficient for over 3 MW.

Current equipment installed for *BABAR* computing consumes about 0.07 Watts per $ spent. We estimate that the Tier 2 will reach an asymptotic power consumption of less than 200 kW, assuming $500k spent annually on equipment, a 4-year replacement cycle and a maximum consumption of 0.10 Watts per $.

The current tentative plan, driven primarily by the need of *BABAR* taking data at increasing luminosities, is to abandon large-scale forced air cooling and use enclosed racks incorporating water-cooled heat exchangers for new farm installations. We believe that this will prevent the Tier 2 from being the last straw and will lower the total cost of cooling upgrades. There will be costs to install the 200 kW of "low voltage" power distribution. The water-cooled racks themselves should be chargeable to the Tier 2 funding. We assume that planned upgrades to chilled water production will not change in scale on account of the Tier 2.

4. Manpower Needs

SLAC's contribution will be primarily in manpower, as the ATLAS detector construction is near completion. We will present the manpower plan by project. We recognize that some post-doc candidates would like to be involved in more than one experiment, e.g. *BABAR* and ATLAS, or ATLAS and ILC. Such arrangements can make sense with proper planning and structuring. We will work with *BABAR* and ILC groups if there is common interest.

A strong presence at CERN is needed for us to play a significant role, especially for the detector projects and physics participation. The resident people provide a key communication channel to ensure the people working at SLAC are well informed. The people at CERN, in particular the post-docs and students, will quickly become familiar with analysis tools and develop physics analysis expertise in addition to the detector responsibilities. They should rotate back to SLAC after extensive stays at CERN. Their expertise allows them to continue operate effectively remotely and to help other members of the team.

The projected manpower level for the first two years is summarized in Table 2. We have estimated the split among the detector projects, and between CERN based and SLAC based efforts. The details are likely to change when project details and the availability of specific manpower are better understood.

Table 2: Projected manpower level for the first two years by project and by site.

		Pixel	Simulation	Trigger	Total
2006					
	CERN	1.5	0.0	1.0	2.5
	SLAC	0.5	0.5	1.0	2.0
	Sum	2.0	0.5	2.0	4.5
2007					
	CERN	4.5	0.0	1.5	6.0
	SLAC	1.0	1.0	1.5	3.5
	Sum	5.5	1.0	3.0	9.5

We expect SLAC's commitment will continue to grow in 2008 and beyond. While we expect to retain detector responsibilities, the emphasis will shift to physics analysis. In addition, individuals may take on ATLAS global responsibilities outside of our group commitment.

4.1. Pixel Detector and Tracking

It is important to ramp up this effort rapidly as the pixel detector will be installed in 2006 and ATLAS will start data taking in 2007. A significant presence at CERN is necessary to have impact. The people stationed at CERN are also important to maintaining a strong team at SLAC by fostering communication between the two sites.

We therefore expect two to three staff to start part-time as soon as possible, working at LBNL to become familiar with the pixel detector. They will each spend ~1/3 of their time at CERN starting spring 2006 to take part in final testing, installation and commissioning. We expect their trips to be extended, e.g. one month or longer, in order to use that time effectively. They will spend ~1/3 time working on pixels while at SLAC on areas such as alignment that do not require presence at CERN. We would like to hire a post-doc as soon as possible. He/she will be stationed at CERN. The total manpower for 2006 will be ~2 FTE.

We would like to have another staff join the pixel effort after the first year. At that time, we anticipate that one of the staff may spend an entire year at CERN, while the others will commute. We would like to hire another post-doc the second year, and bring on one or more graduate students on a similar time scale. They will also be stationed at CERN. The manpower for 2007 will be 5 to 6 FTE.

Rotation of manpower back to SLAC is crucial to maintain a strong local effort. We expect the post-docs and students to spend 1-2 years at CERN and then return to SLAC, to be replaced by new post-docs and students.

4.2. Trigger

The trigger effort is expected to involve both trigger algorithm and configuration tasks closely related to the physics goals of the ATLAS experiment, as well as the software infrastructure and code performance in the high level trigger (HLT) system. Groups involved in the HLT are typically only one to a few people, but with special trigger and online skills. Given the expertise present at SLAC, we should be able to assemble a team to make a significant impact. Given the interactive nature of the trigger system to the experiment, it is also important to maintain the presence of at least one to two physicists at CERN, while others based at SLAC will take short term visits to CERN.

The desired startup pattern for 2006 is to have ~0.5 FTE effort starting on the HLT software infrastructure for which we need a representative resident at CERN, and ~0.5 FTE summed between participants working on the trigger algorithm and configuration

studies, which could be mostly a remote effort still based at SLAC. These initial efforts are expected to come from staff members. It will be supplemented with a new post-doc based at CERN for a total effort of ~2 FTE.

The desirable manpower level by 2007 is ~2 FTE from staff members plus one post-doc and possible student(s). If we take up major responsibilities in the trigger system, the fraction of people based at CERN may increase.

4.3. Simulation and Infrastructure Support

The manpower needs for simulation and infrastructure depend on the level of involvement of SLAC in the simulation effort, and the topics which SLAC might undertake. Clearly, if SLAC undertakes a major role in implementing an as-built detector configuration, it would be essential to have at least one full-time physicist present at CERN during the installation and commissioning phase to coordinate the survey work with the simulation implementation. Similarly, if SLAC were to take a leading role in any of the commissioning or alignment tasks it would be necessary to be onsite while this effort was ongoing. At a minimum, we expect ~0.5 FTE to be necessary for any involvement incorporating an as-built geometry, with a target for 1 FTE with more higher-level or in-depth responsibilities.

The Geant4 experts have estimated that it will take a student approximately one year to implement parameterized showers for ATLAS. Most of that time will be spent on tuning.

4.4. An ATLAS Tier-2 Center at SLAC

The selected Tier-2 site will be funded by U.S. ATLAS at $600K per year for three years. The proposed Tier-2 center at SLAC will be small compared with the other facilities here. The incremental manpower needed is expected to be ~1 FTE, and will be charged to the Tier-2 funding.

The SCCS Physics Experiment Support Group has strengths that are highly relevant to ATLAS simulation and physics analysis. This group supports Geant4 for *BABAR* and GLAST and provides SLAC's contribution to Geant4 core development. The group has developed the *xrootd* scalable, fault tolerant data access system used by *BABAR* and seriously considered for LHC, and the group also provides key members of the *BABAR* online team. None of this effort is required as a formal component of the Tier 2 proposal. However, the Geant4 effort is already of direct relevance to ATLAS, and, in the longer term, the skills of the group could be used to strengthen SLAC's role in ATLAS.

4.5. Manpower Summary

In summary, we expect to have ~5 FTEs the first year (exclusive of Tier-2 operations). We expect approximately five additional FTEs every year until we reach an asymptotic level of twenty. In addition to the authors of this document, a number of people have expressed interest working on ATLAS. They will transition as their existing

commitments wind down. Some may be able to contribute in 2006 already, and others will start in the next year or two. We expect no problems in finding the manpower for the ramp rate of five persons per year, including additional post-docs in the LHC/ILC pool. We look forward to working with the Laboratory to manage the manpower migration to minimize the impact on *BABAR* and ILC.

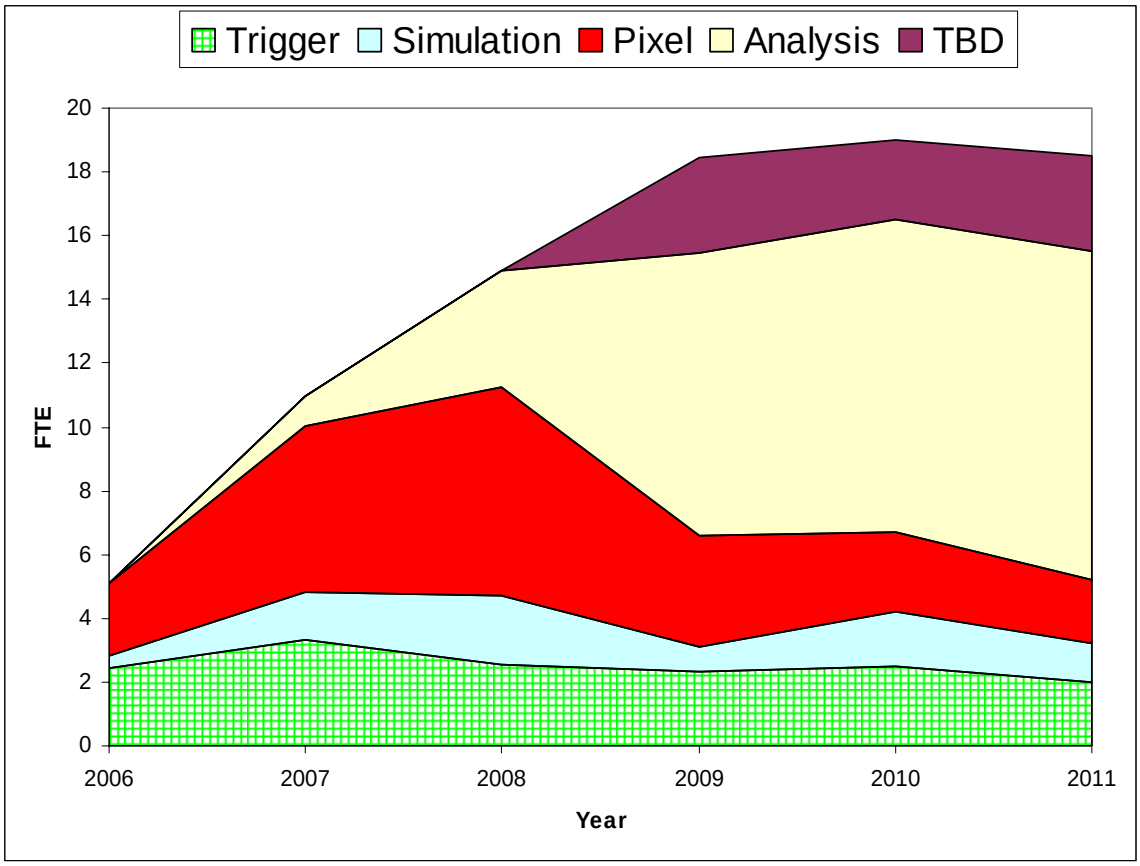

Figure 3: Approximate manpower profile

In addition, we expect the following people will lend their expertise.

- Makoto Asai and Dennis Wright. They are Geant4 core developers.
- Douglas Smith. He is the maintainer of HyperNews.