PEP-II Vacuum Upgrade

Presented by: Nadine Kurita

Contributors: D. Arnett, B. Bigornia, C. Carr, S. Debarger, J. Langton, S. Metcalfe, D. Kharahk, M. Kosovsky, R. Pope, N. Reeck, A. Sheng, B. Smith

April, 28, 2006

Outline

- Vertex Bellows Spare
- Forward Q2 Chamber
- Q1/Q2 HOM Bellows
- LER Q4/Q5 Vacuum Chambers
- HER Q4/Q5 Vacuum Chambers
- New RF Cavity Stations
- LER Bellows with HOM tiles
- HOM Straight Bellows
- LER Arc BPM's
- IR2 BPM In-Situ Modification
- Long TSP

Vertex Bellows Status

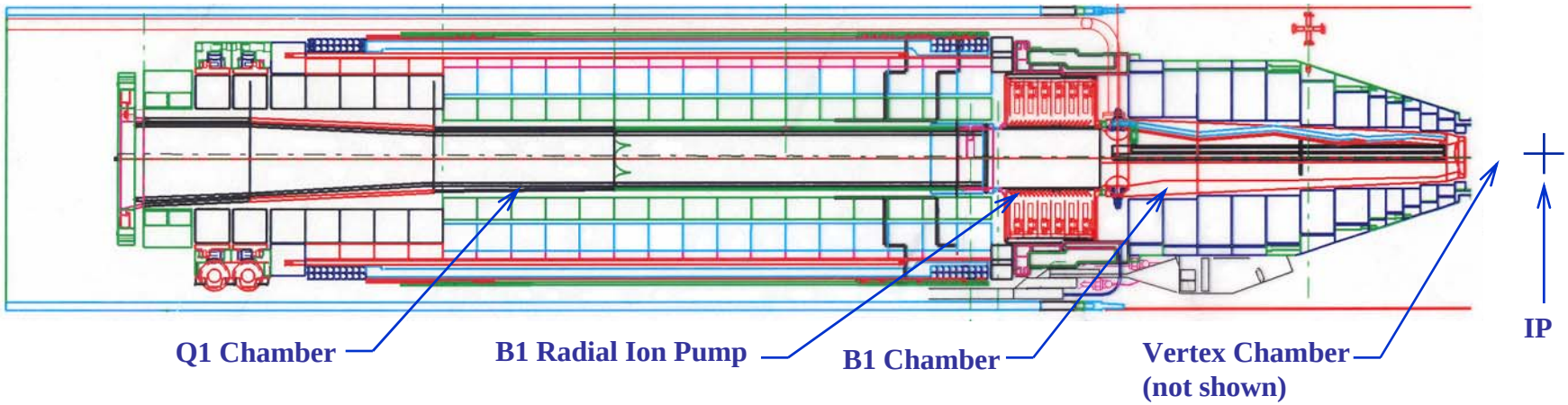

- Spare vertex chamber exists.
- Gold sputtering on hold for vertex bellows redesign.
  - Plan on gold sputtering the SS braze ends to reduce HOM and I^2R losses in this area.

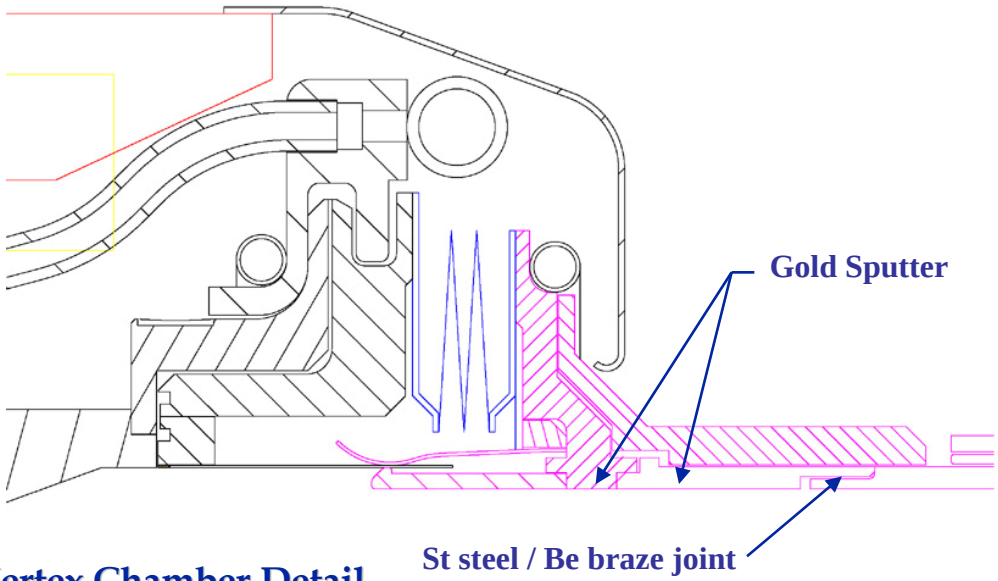

Vertex Chamber Detail

Vertex Bellows Status

- **Re-design Vertex Bellows**
  - **TE power leaks past the RF shield and heats of the stainless steel welded bellows and inconel fingers.**
  - **Reduce power into the stainless steel welded bellows cavity.**
    - **Designed small cooled AlNiSiC absorbing tiles in the bellows cavity space.**
  - **Design complete pending final design review**
    - **HOM and thermal analysis completed.**

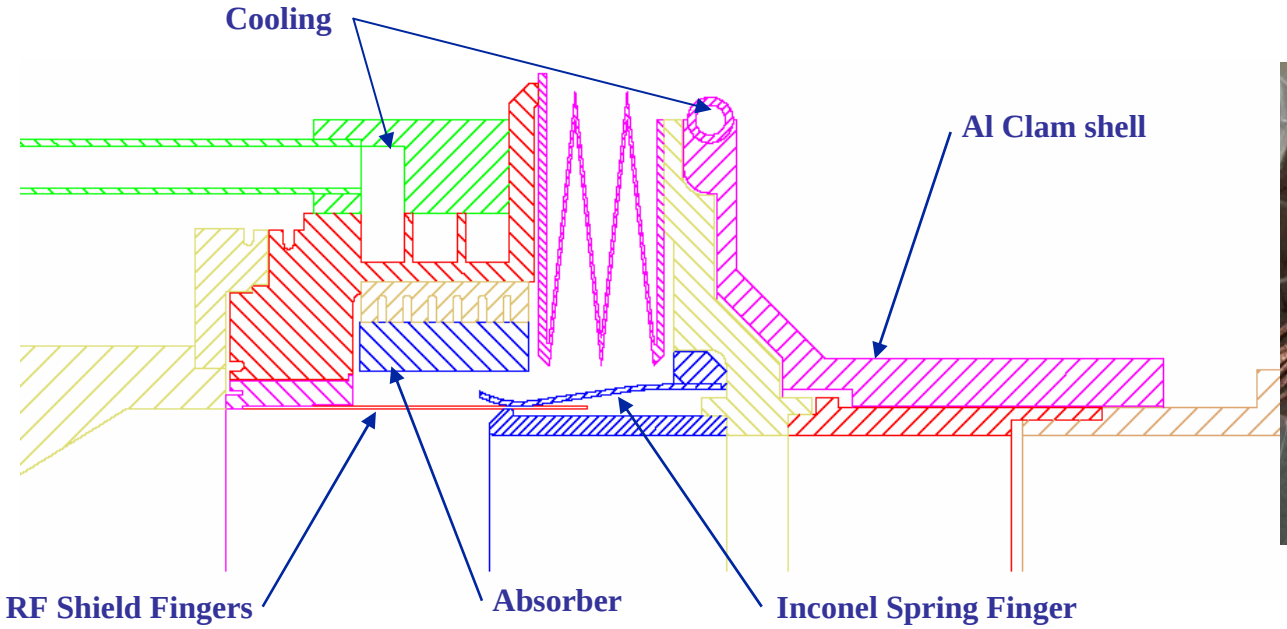

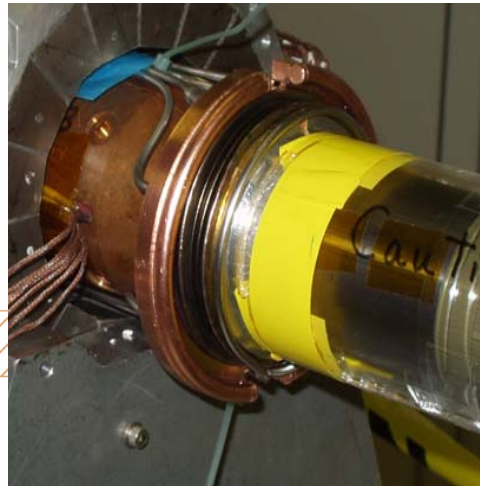

Vertex Bellows Status

- Project was on hold for ~ 1 years.
  - No engineering resources.
- Effort has restarted in January.
  - Reviewing parameter changes since the last review.
    - Do not need to upgrade the SVT.
    - Decision not to rebuild the radial ion pump.
    - Decision not to upgrade the vertex bellows.
    - Upgrade to vertex without disassembling the entire support tube.
- Complete spare vertex with upgraded bellows.
- Project fully funded.

Forward Q2 Chamber

- **Q2R (Forward)**
  - **Replaced Q2R with a Q2L chamber in 2002.**
    - **Increase BSC acceptance and reduce HOM.**
    - **Failed due to material flaw in the GlidCop.**
  - **Original Q2R chamber reinstalled in 2003.**
    - **Clips BSC**
    - **No evidence that it creates increase HOMs.**
  - **New Q2R is installed.**
    - **Chamber in final assembly.**
    - **Completed & installed in March 2006.**

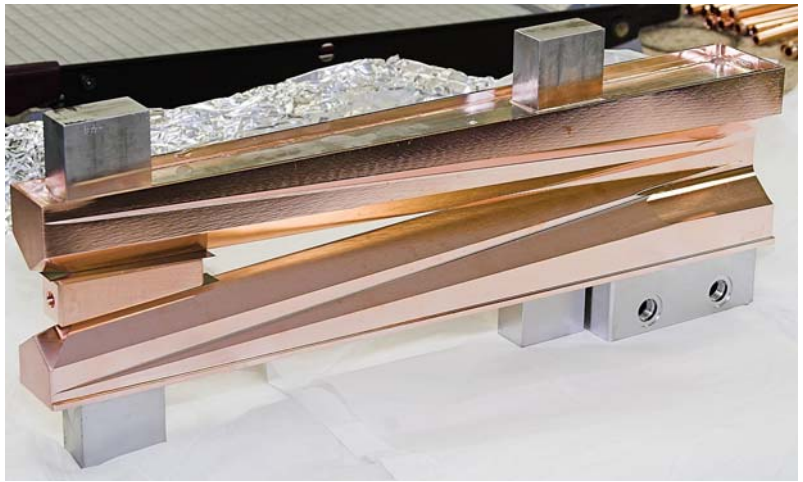

Q1/Q2 New RF Seal Design

- Suspected that arcing could be occuring at the rf contact between the AlN-SiC tile.
- Redesigned the RF seal to make contact behind the tile on the copper surface.
- Installed with the new Q2 chamber

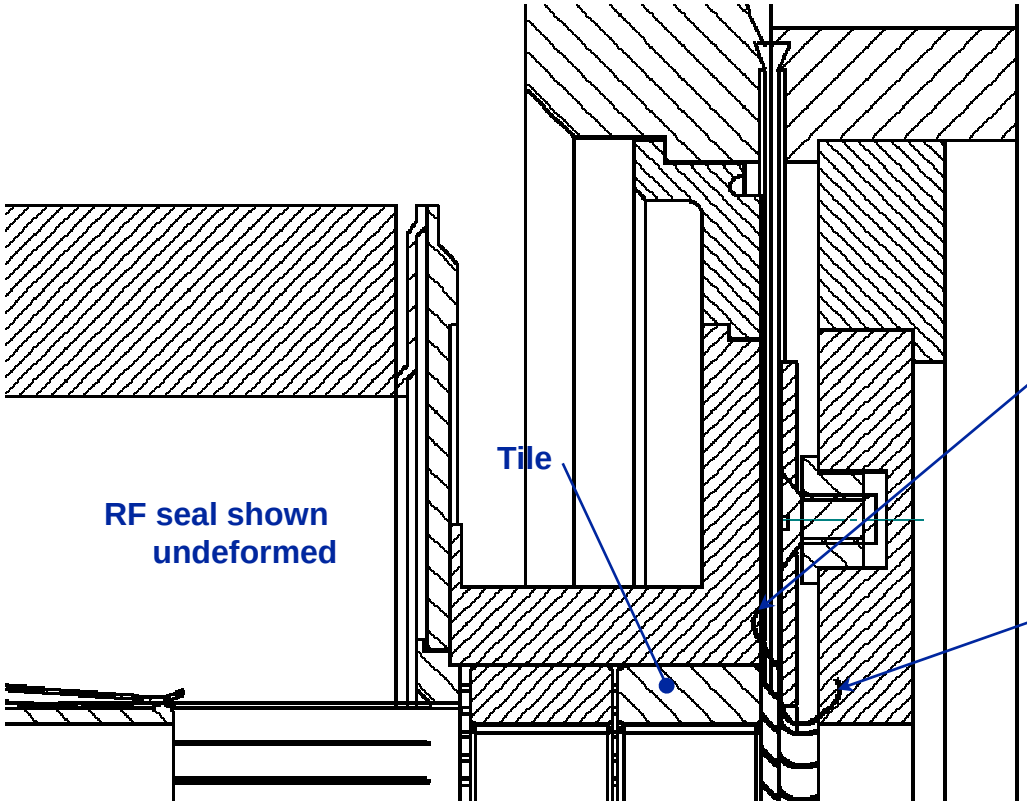

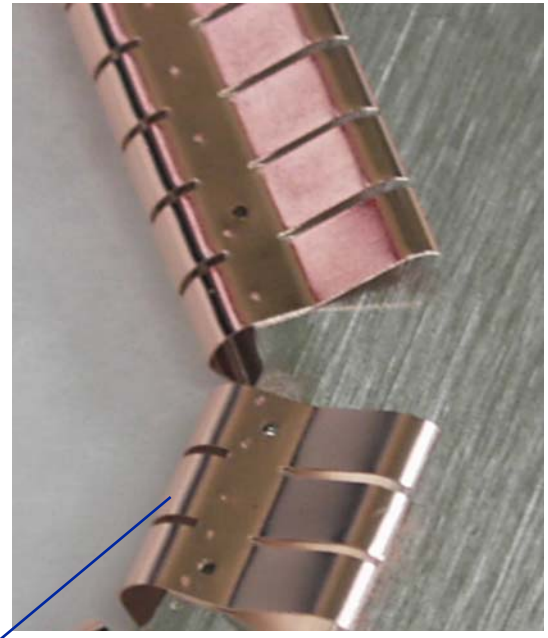

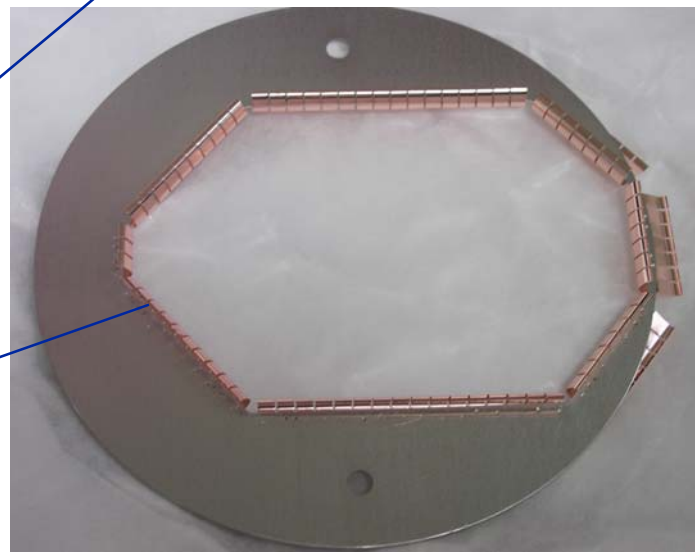

Q1/Q2 HOM Bellows

- FY2003 added 4 layers of tiles per module.
- Absorbing ~12 - 14 KW presently
- Predict ~ 50 KW in 2007
- Significant work on HOM analysis
  - 50+ design solutions have been analyzed by A. Novohatski & S. Weathersby.
  - A compromised solution has been found.
    - Does not absorb as much HOM as the original design.
    - Optimized absorption
      - Space
      - Suppress the monopole mode and hide the tiles from the beam behind an RF shield
      - Reduce HOM power into the tiles to 25-30 KW
- Final design complete in May 2006
- RFI – November 2006

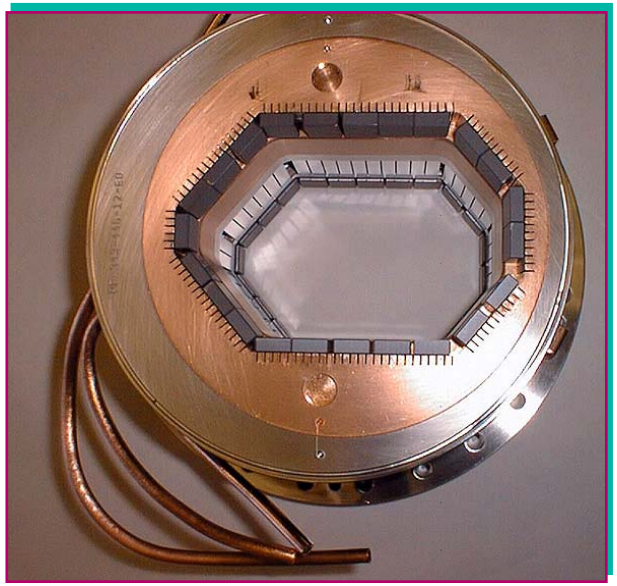

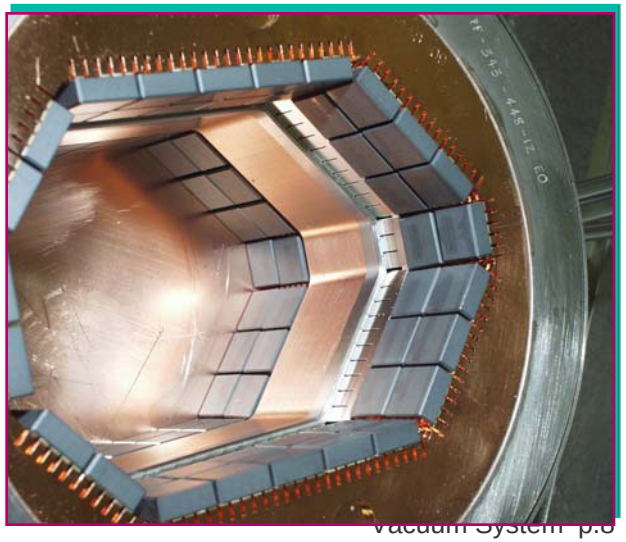

Q1/Q2 HOM Bellows

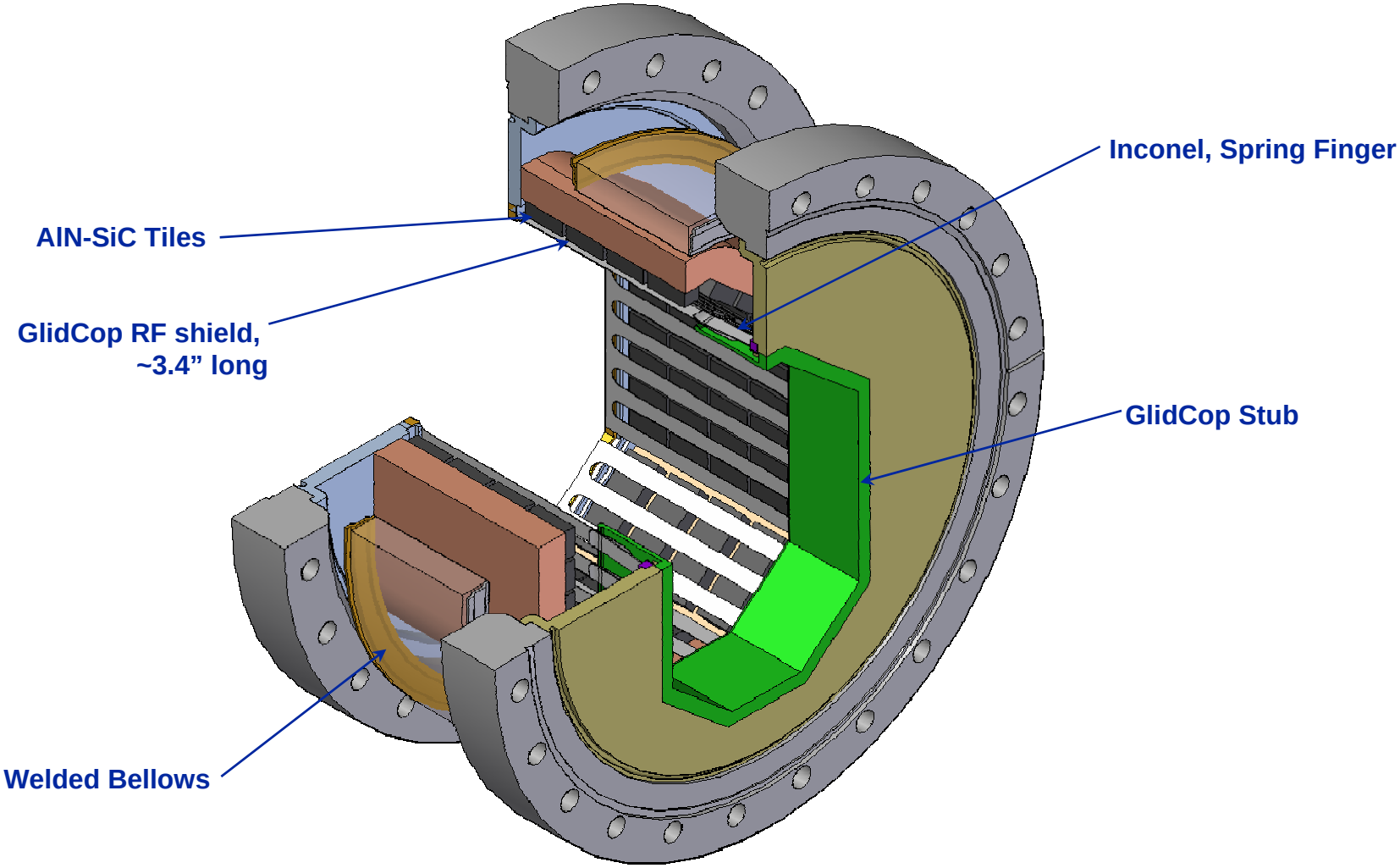

HER- Downstream, “Forward”, “Right”

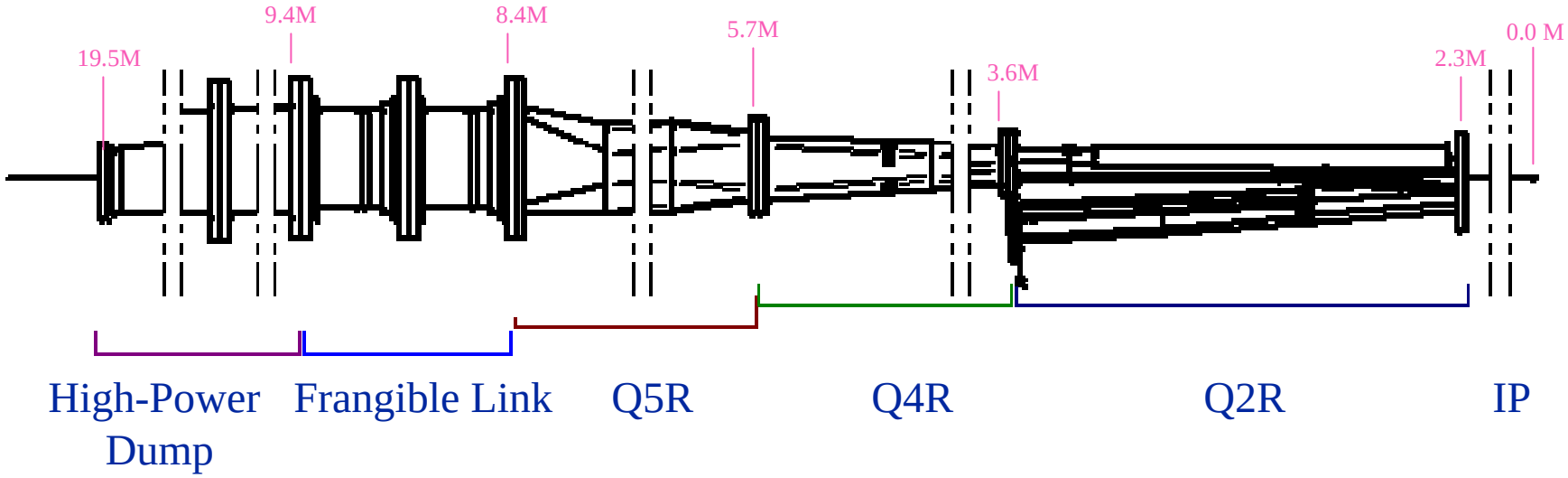

HER- Upstream, “Backward”, “Left”

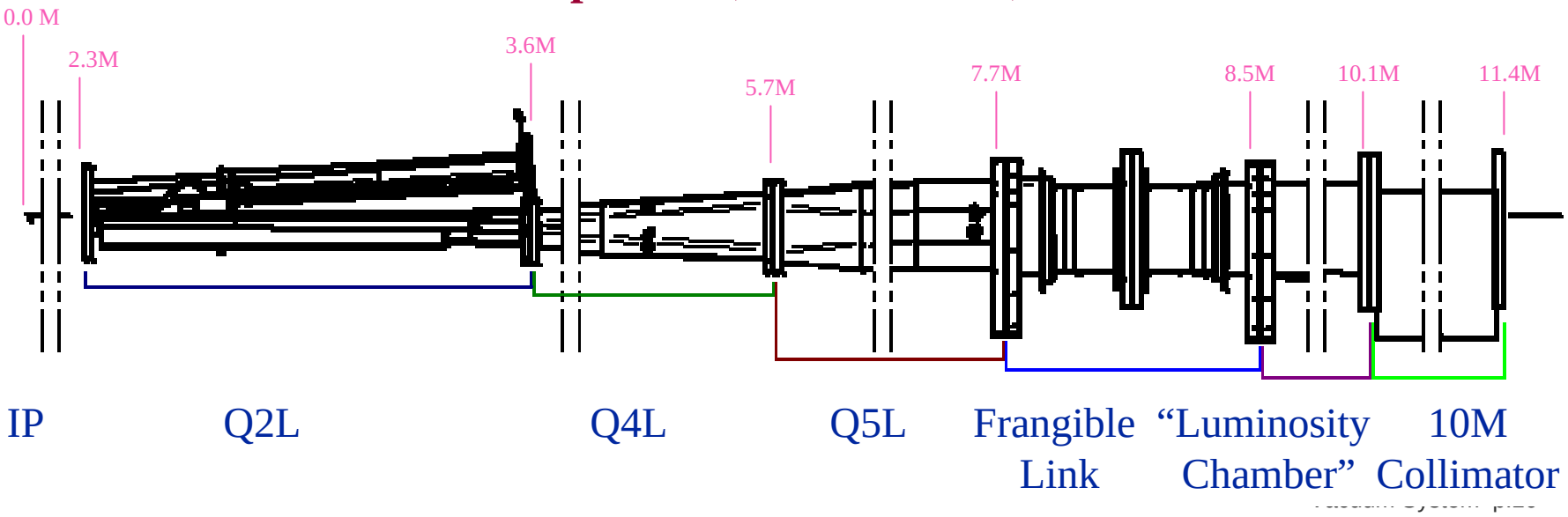

Outboard of the near IR

- **Q5 & Q4 HEB Chambers**
  - **General problems**
    - **Mechanical & HOM failures in the NEG screens**
    - **Beam Stay Clear (BSC) & Lumi cone.**
    - **Thermal motion issues?**
      - **Magnet instabilities**
      - **Q4 & Q5 are rigid chambers that have minimal to no clearance to their respective magnets.**
      - **Load on Q2 chamber, IR support raft, magnets**
    - **Global alignment error between the "Bong" Collimator and Q5.**
  - **Q5R (Forward End)**
    - **Flange heating**
    - **Neg screen destorted**
  - **Q5L (Backward End)**
    - **Masks failed and replaced**
    - **Neg screen detached**
  - **Q4R (Forward End)**
  - **Q4L (Backward End)**
    - **Masks failed and replaced**

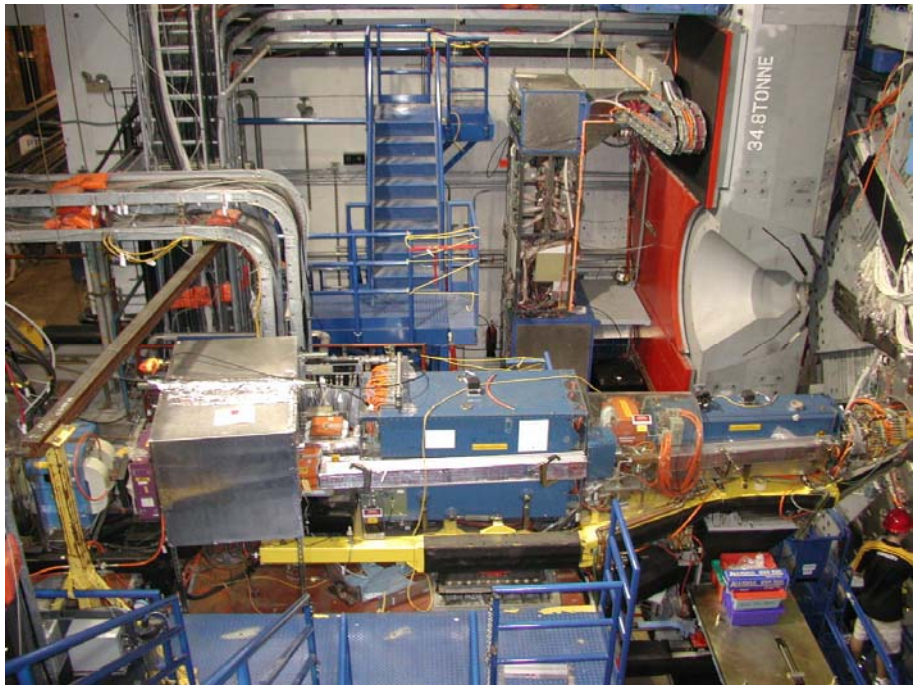

HER Q4/Q5 Chambers

- **Goals achieved**
  - **LER: 4.5A, HER 2.2 A**
  - **Designed between the defined BSC/luminosty cone and existing magnets**
  - **Maintain a 2mm gap to poles and a 3mm gap to coils.**
  - **Reduce thermal gradients**
    - **Aluminum clamshell design**
  - **Added a bellows between Q4, Q5**
  - **Added a flex flange between Q2L & Q4L**
  - **Improve kinematics and stabilize BPMs**
  - **Decrease the TE leakage to the pumps**
    - **Screen hole diameter reduced to 3 mm and depth increased to 6mm.**

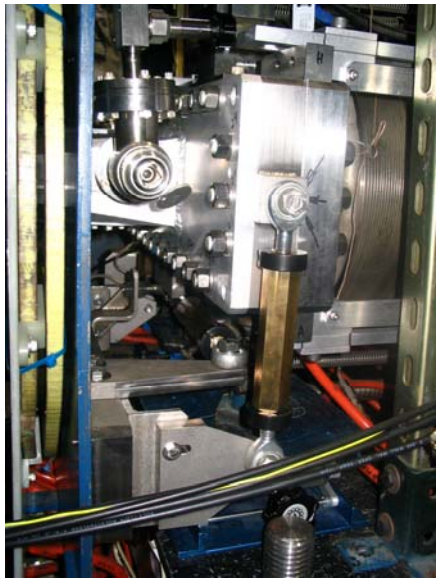

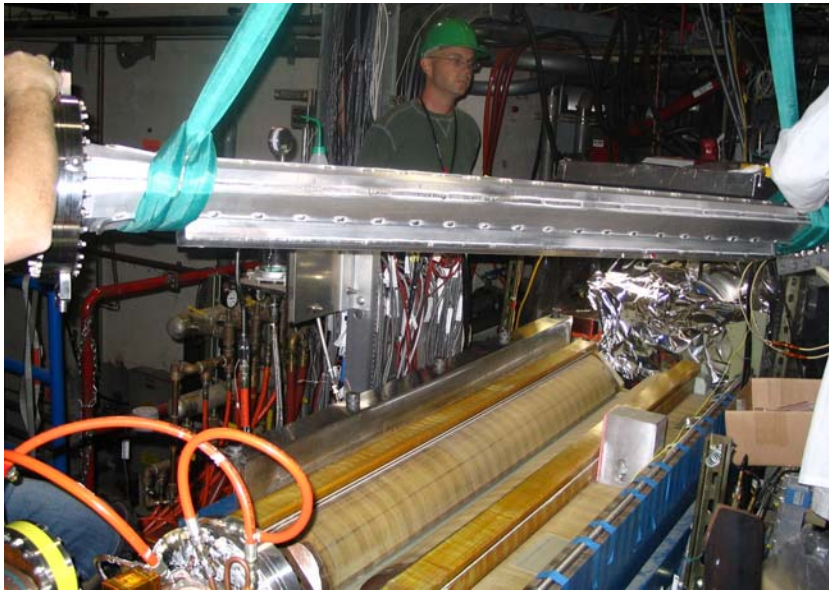

Status/Schedule

- HER Q5 Backward Chamber & Q4/Q5 Bellows
  - Installed Fall 2005
- HER Q5 Forward Chamber
  - RFI 2/06
- HER Q4 Forward Chamber
  - RFI 3/06
- HER Q4 Backward Chamber
  - Assembly complete 4/06
  - RFI 5/06
- On original AIP budget and ready for ’06 downtime.

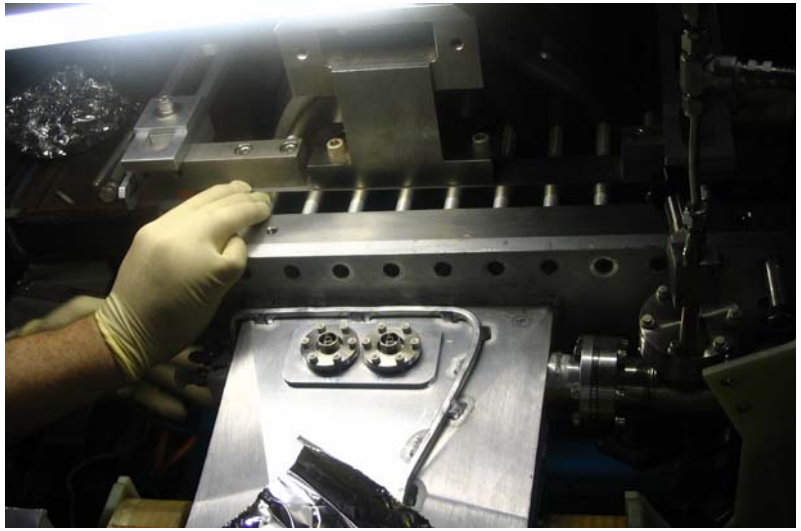

HER Q5 Forward Chamber

HER Q5 Forward Chamber

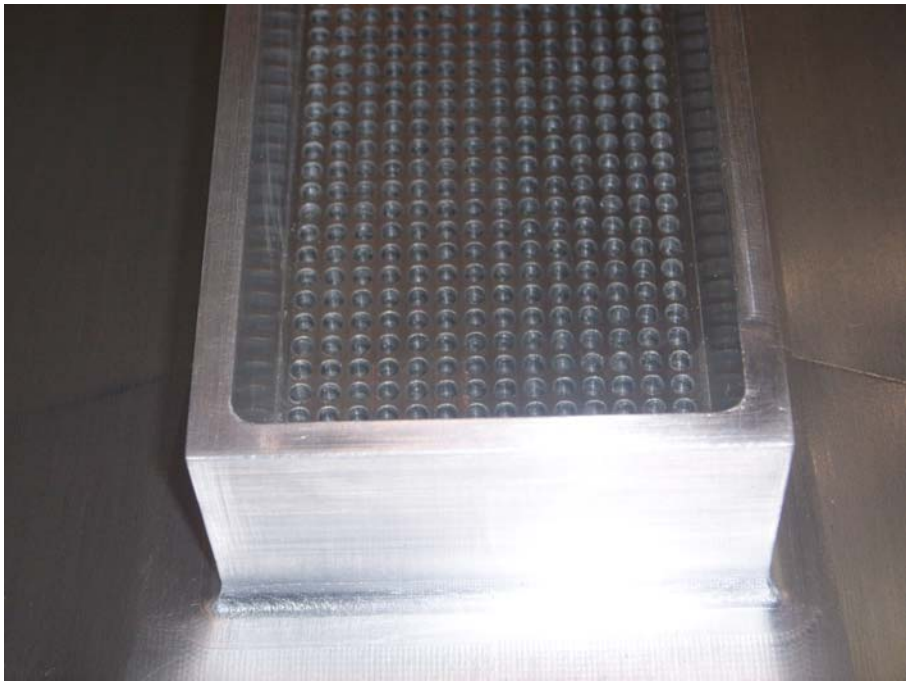

- New RF screen
  - 3mm holes, 6mm deep
  - NEGs are no longer getting hot from HOMs.

HER Q4 Forward Chamber - RFI

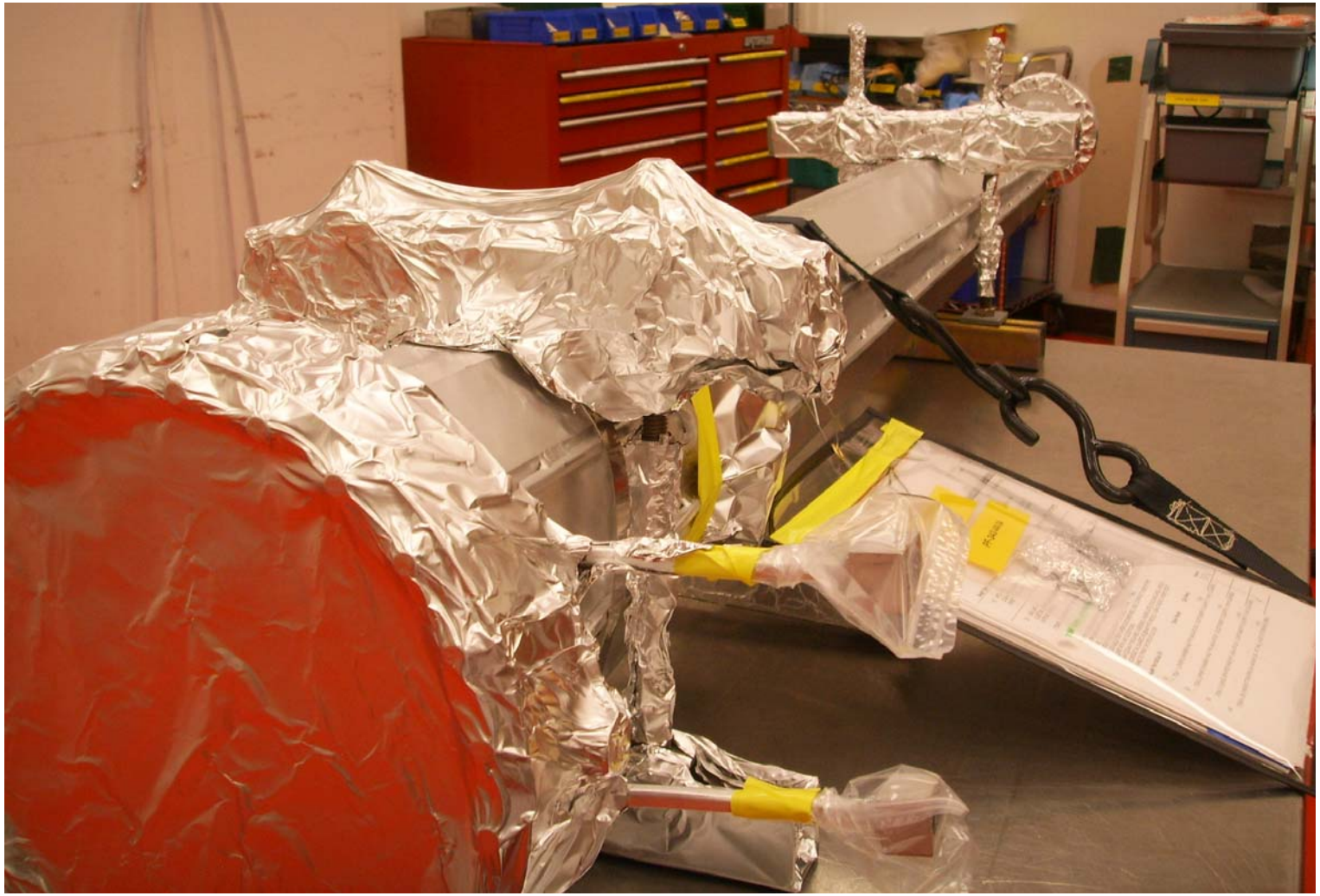

Q4/Q5 Bellows with Absorber

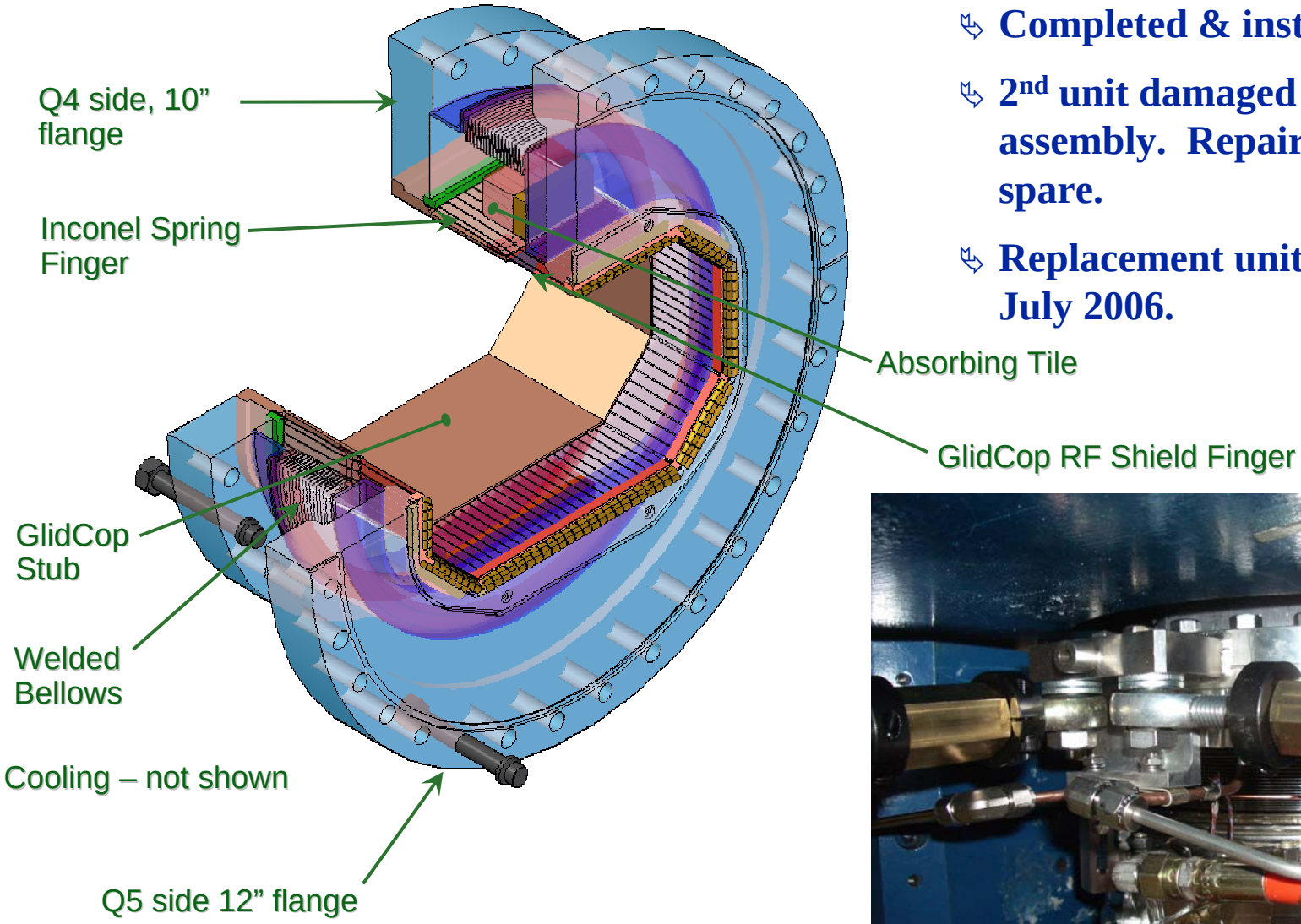

- Completed & installed 1 unit.
- 2nd unit damaged during assembly. Repair and use as spare.
- Replacement unit complete in July 2006.

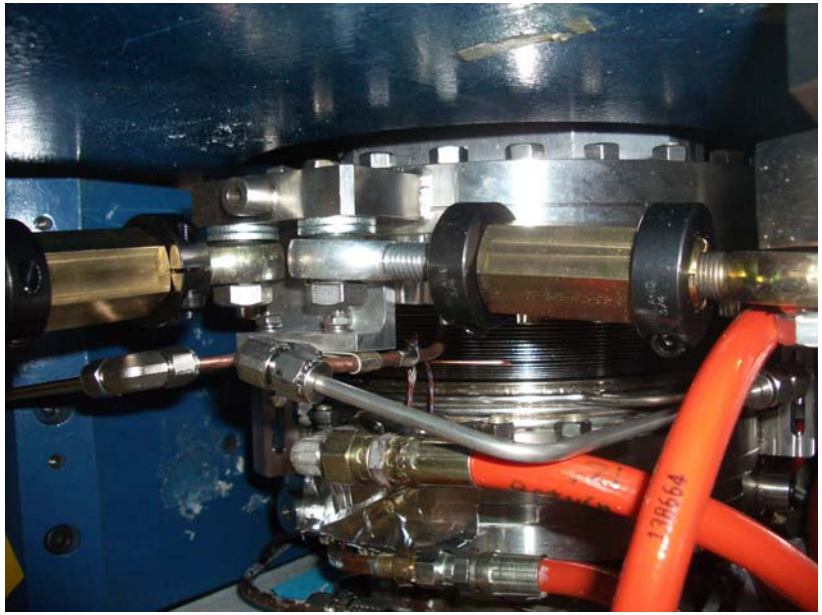

LER Q4/Q5 Chambers

- Two major issues led to redesign
  - NEG heating problem
  - Thermal motion of the backward raft/magnets.
- New design for Q4 and Q5 chambers underway
  - Improve RF screens
  - Adding bellows, improving mask cooling and adding additional cooling.

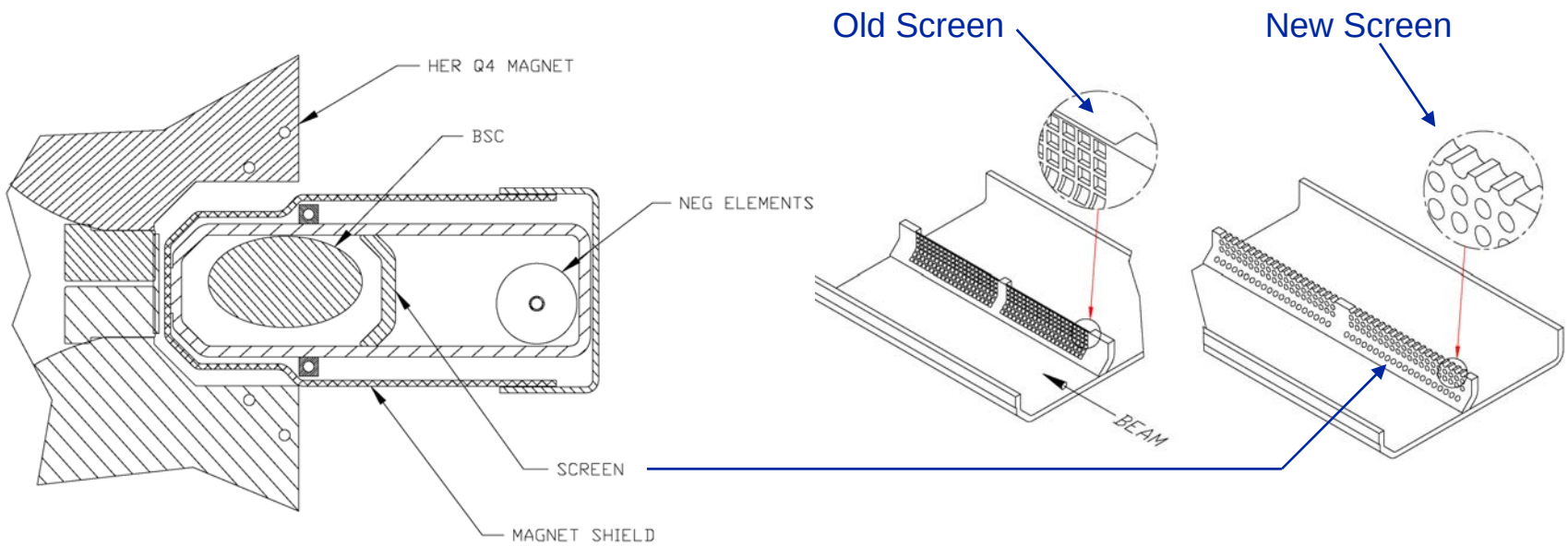

Q4/Q5 LER Chambers

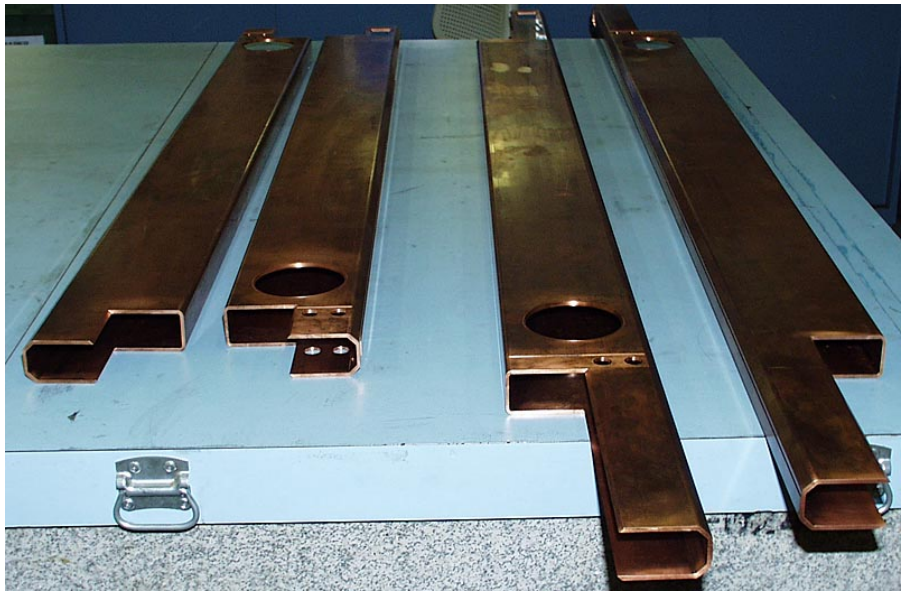

- **Manufacturing Status**
  - **143 of 176 component parts have been manufactured (82%)**
  - **22 of 34 sub-assemblies are complete (64%)**
  - **0 of 4 assemblies are complete**
  - **NEG pumps have been assembled**
  - **Chamber screens are being manufactured by OV, due in next week.**
  - **BPM's are being manufactured by Meggett, due early July.**
  - **Machining of chamber extrusions is complete.**
  - **May '06 – Start assembly and welding**
  - **August '06 – all four chambers RFI**

New RF Cavity Station

- **HER**
  - **Remove 156” long drift chamber from Beam Line;**
  - **Install two cavities.**
  - **Install additional 220L/sec Ion Pump between cavities**
  - **Fabricate new drift chambers & straight bellows**

RF Cavity – Vacuum Status

- All drawing completed
- Fabrication underway
  - Fabrication of the new 5 drift chambers and anchor systems;
  - Straight Sections Bellows assembly RFI;
  - 220 l/sec vacuum pump refurbish, RFI;
  - HER Pump Tee - existed, ready for Bake Out.
  - Modifications of the LER raft supports in the tunnel;
  - Supports for LER Trans./Vat/Pump and Quad QDP8;
  - HER Cavities “I” support plates, Pump Tee support Assy, etc.
  - Remainder of parts here by May ‘06
  - Installation – October ‘06

HOM Straight Bellows

- Goal – to create a HOM absorber in a defined modular space.
  - HOM absorber will damp and absorb the power to prevent neighboring components from seeing excessive HOM power.
    - Valves, NEGs
- Design was optimized with MAFIA simulations.
- Complete 1st prototype in May '06.
  - Rh plating
  - Final Assembly
  - Bake
- Improving tile brazement tooling.
- Complete 3 units in August '06.

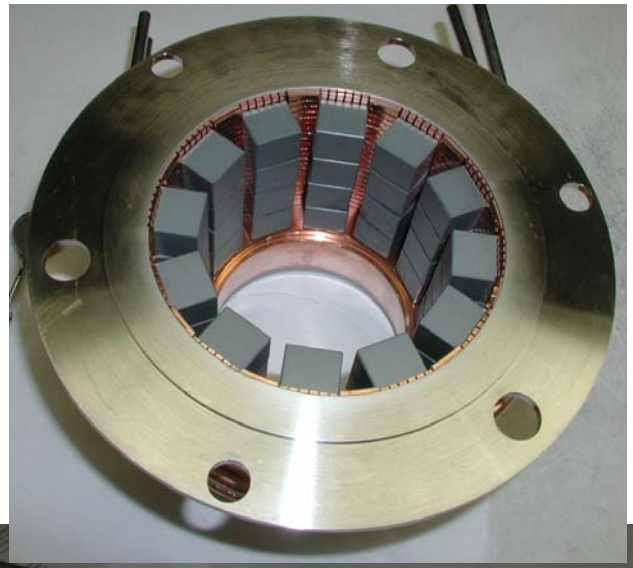

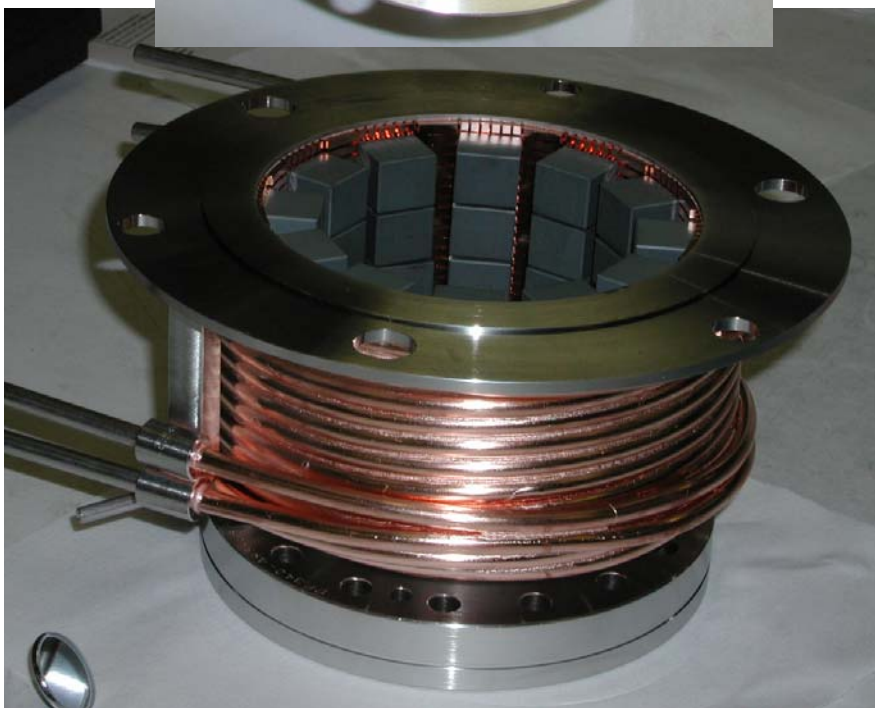

HOM Straight Bellows

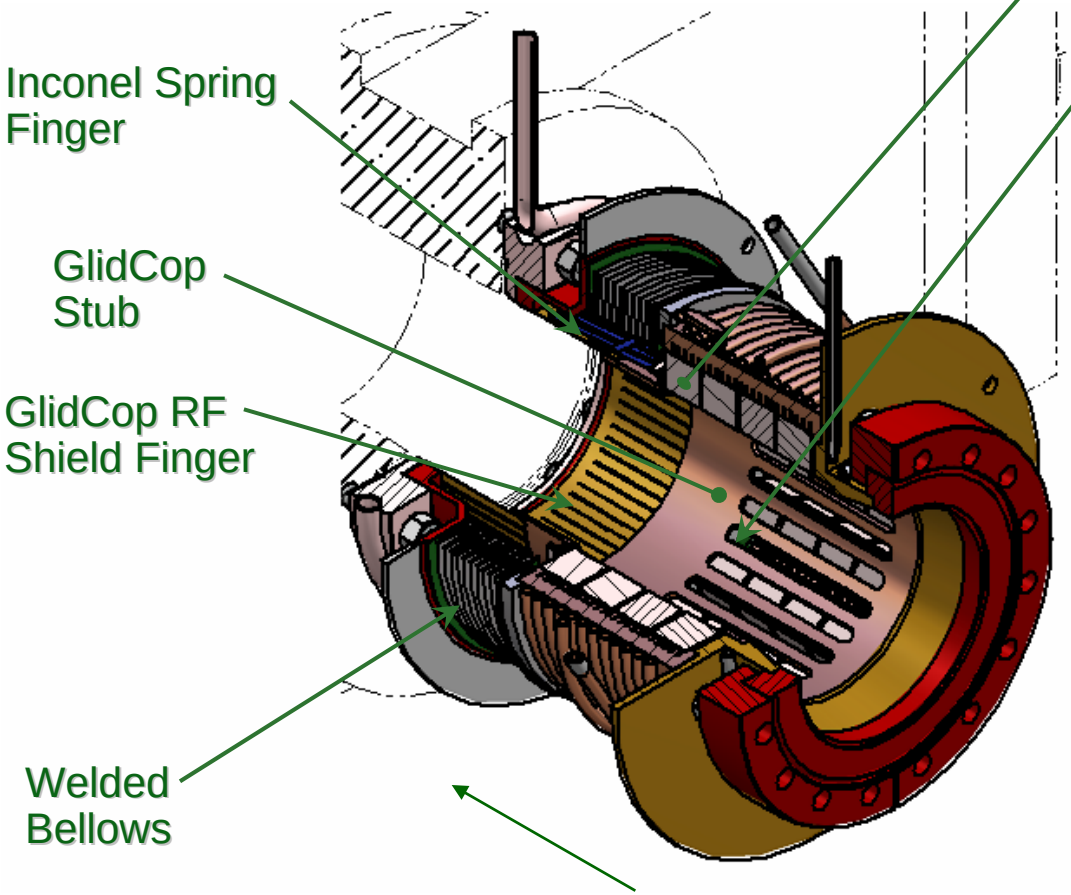

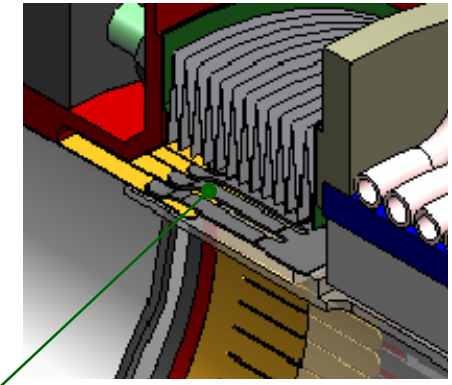

Bellows Cavity

Modes that leak past the RF shield finger and are trapped in this area still see the absorber

PEP-II BPMs

- Two areas are of major concern due to the high current and BPM position relative to beam.
  - LER arc BPM's
  - IR2 BPM's
- LER Arc BPM's
  - Flanged in so they can be modified.
  - Investigating several options
    - Remove button only, ϕ.056" pin as button
    - Remove button, attach new ϕ7mm button & insert
    - New BPM's
      - Saint Gobain
      - Meggit
      - Times Microwave
  - Placed prototype order with Times
  - If removing button works this is the most cost effective solution
    - Calculations for signal strength and HOM underway
    - Final decision next month.

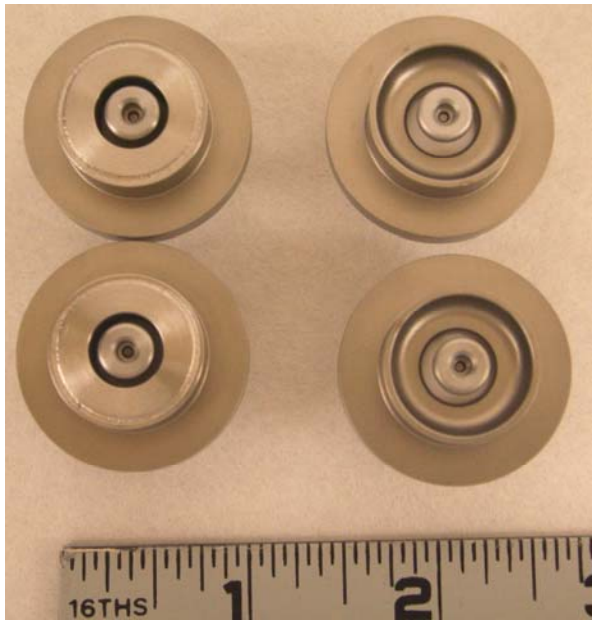

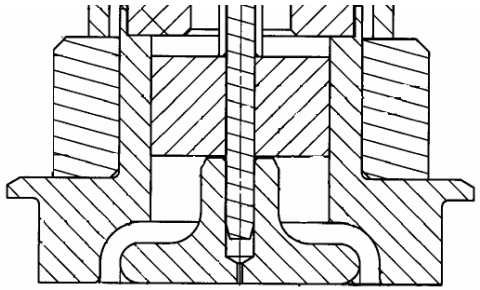

IR2 – In Situ BPM Puller

- IR2 – In situ BPM puller
- 29 BPM sets
  - Solution is to leave the .090” diameter pin as the button
- One chamber last downtime has this configuration.
- The puller was designed to utilize the 4” of space taken up by a bellows module.
- The concept was tested and the collet survived 310lbs.
  - Expected load 20 – 100 lbs.
- Boroscope utilized for positioning the collet.

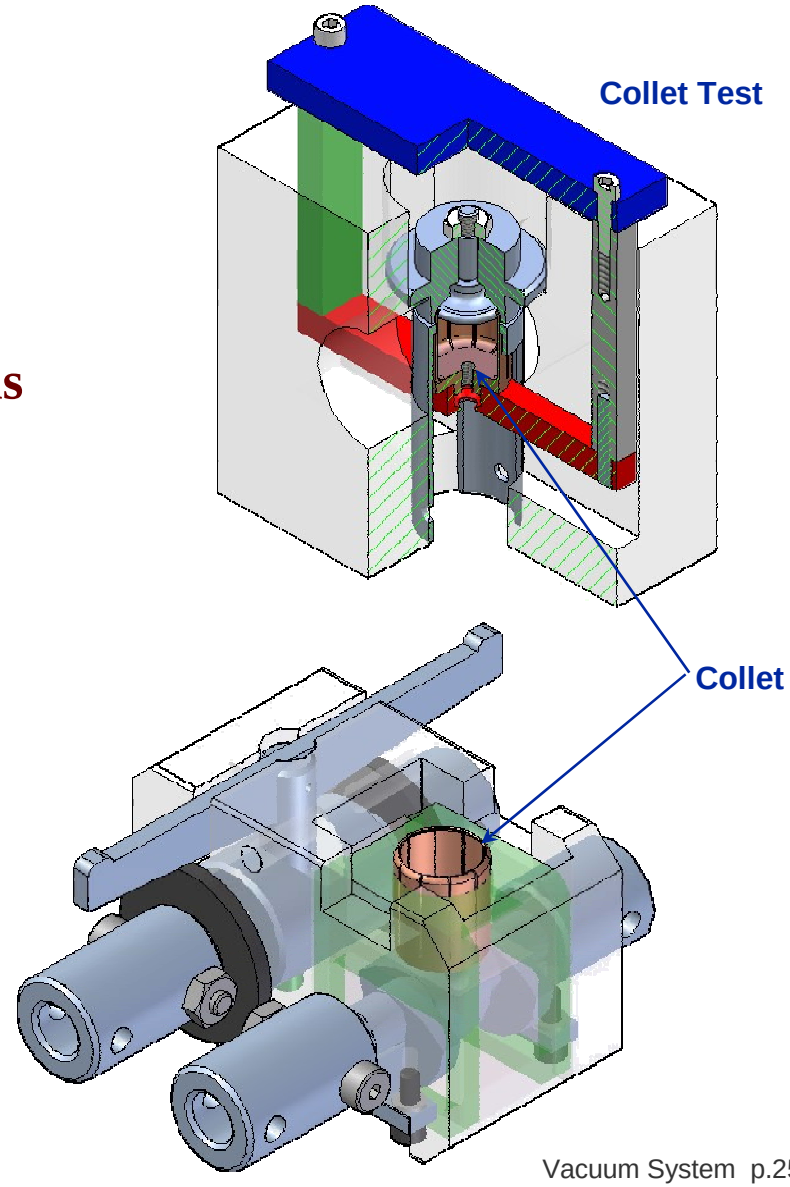

BPM In-Situ Puller

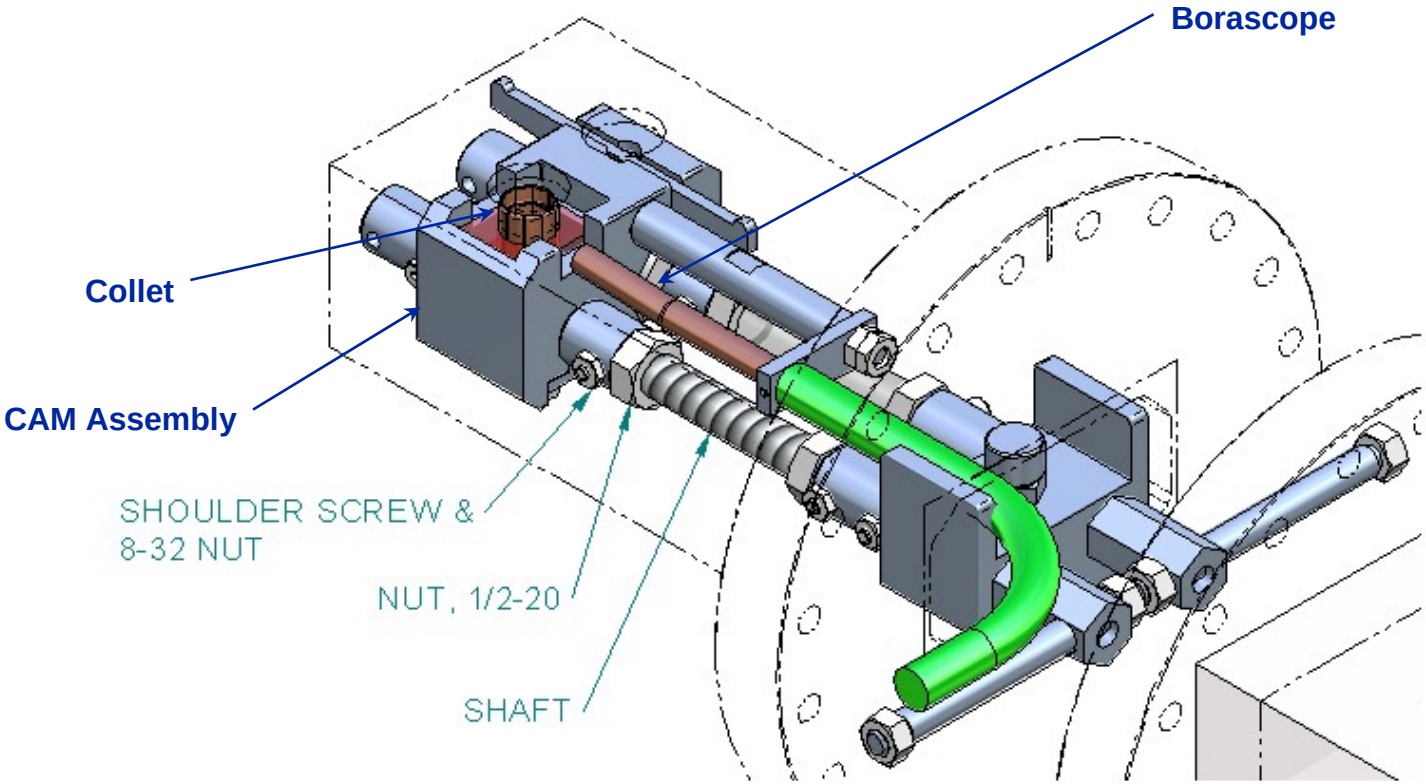

Long TSP

- Designed to replace NEGs that are overheating.
- Testing of the unit underway.
- Locations are being investigated.
- HOM heating of the TSP unit?

Summary

- **Funded AIP projects will be ready for the 2006 downtime.**
  - **Critical Path Projects**
    - **Q2 Bellows – needs solution**
    - **LER Q4/Q5 chamber**
    - **LER arc BPM's**
  - **In-situ BPM button removal has significant technical risk.**
    - **Full concept will be tested in May '06.**
    - **Contingency is to remove the chambers and use the puller in the lab.**