Laser Acceleration Experiment Trigger and Timing

The SCA beam is a series of pulses spaced at 11.8 MHz that lasts for roughly a msec. The individual pulses are the *"micropulses"*, and the train of them is the *"macropulse"*. LEAP wants to extract one micropulse and send it down the LEAP line.

The LEAP trigger circuit is designed to provide a trigger pulse to the extraction kicker, the regen, the gated cameras, and oscilloscopes. It has provisions to move the trigger within the *macropulse* without affecting the timing with respect to the *micropulse*.

The SCA signals that are available in the LEAP control room are

MACRO	1. Indicates the arrival of the *macropulse*. 2. The time relationship between the *macropulse* and the MACRO trigger changes from day to day due to reasons I have not identified, so this should be checked at the beginning of each day and in the case of peculiarities such as unexplained disappearance of the beam. 3. MACRO is an inverted TTL pulse with the negative going edge indicating that the *macropulse* will be arriving.
11.8 MHz RF	1. An 11.8 MHz, CW RF signal that has a fixed phase relationship with respect to the *micropulses*.

The first step in the trigger is to generate a QUANTIZED TRIGGER that can be moved with respect to MACRO without losing timing with respect to the 11.8 MHz RF. The circuit is below.

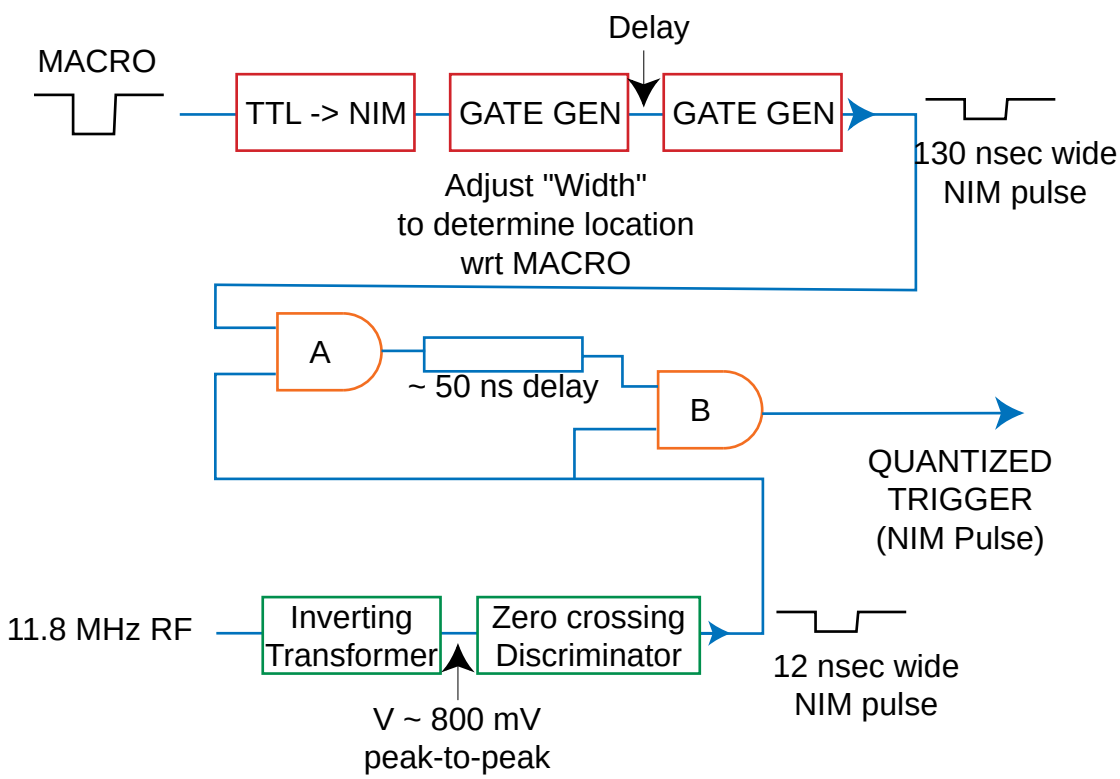

QUANTIZED TRIGGER

The location of the trigger with respect to MACRO is adjusted by the "Width" adjustment on the first gate generator. This adjustment has a knob for setting the range and a screwdriver adjust for setting the value within the range. The 50 nsec delay between coincidence circuits A and B guarantees that the timing of the output of circuit B is determined by the 11.8 MHz RF. This leads to the trigger being quantized - i.e. the trigger timing is determined by the 11.8 MHz RF independent of location with the *macropulse.*

The output of the QUANTIZED TRIGGER goes to two devices. The first is an SRS DG535 delay generator that should be used to delay various triggers with respect to each other but not to set timing with the *macropulse*. If it is used for that, all of the quantization is lost and each individual element must be retimed as you move within the *macropulse*. The outputs of the SRS DG535 delay generator are used as follows

SRS DG535 Output Functions

Output	Function
A	Scope triggers - triggers for the HP54616B that is used for beam position measurements and for the TDS460A that is used for general utility
B	Extraction Kicker - pulse is shaped by discriminator to be a 50 nsec wide NIM pulse
C	Regen Trigger
D	Gated TV camera trigger - pulse is shaped by a BNC pulser to be an inverted TTL signal. The falling edge of that signal triggers the camera and must occur approximately 1 μsec before the camera is to be sensitive.

A second output of the QUANTIZED TRIGGER is used to trigger a gate generator with about 100 μsec delay that provides the trigger to the IMAQ data acquisition board.