A.Mikhailichenko, April 5, 2004

THE LATEST ABOUT PULSER/UNDULATOR

I am sending few materials showing the situation at Cornell for the moment. Description of mostly elements given earlier in [1].

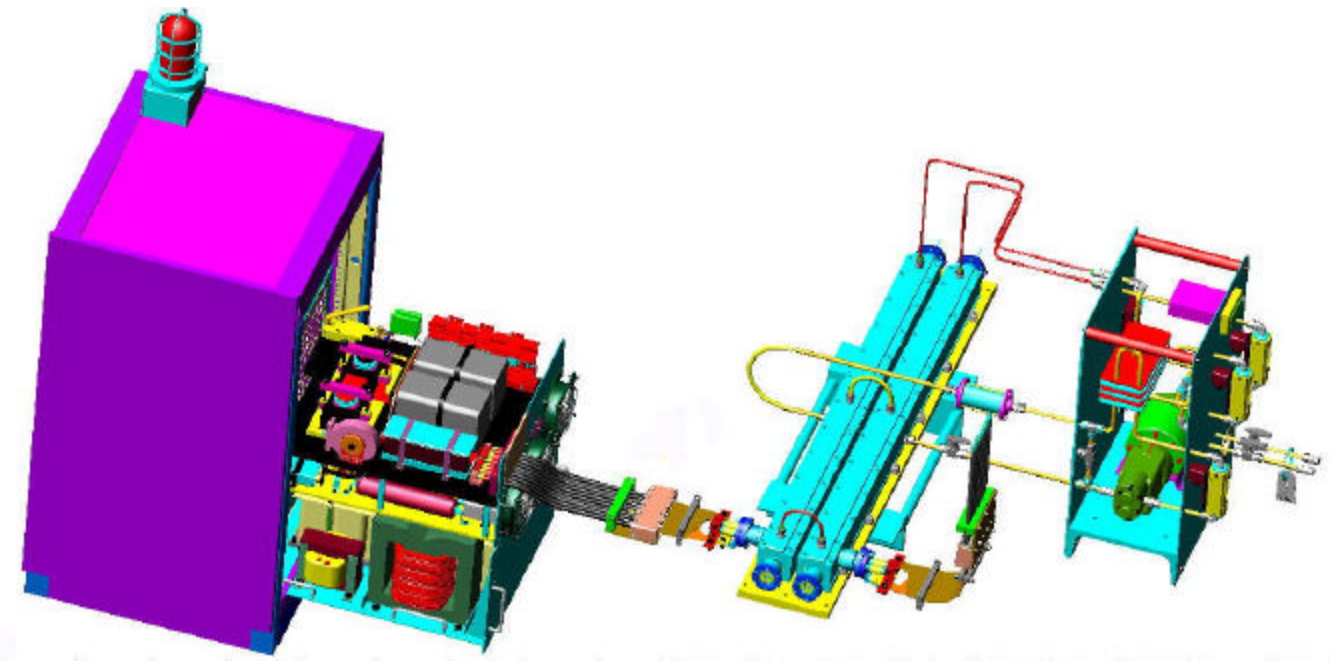

Figure 1: General view to the undulator set, pulser and hydraulic system.

Power supply and ready chain block for pulser located in the same cabinet shown in this figure at the left. Ready chain block has height 3.5 inches. This section will require 3 phase 208 Volt 4 wire line (one for neutral) plus ground line. Cooling –by air.
The distance between pulser and undulator is about 5 meters. Some part of the pulsed transferring line goes as 10 cables in parallel, some as a strip line 4 inches wide..
Pulser inserted into the cabinet with standard 19-inch panel width occupying there 2x10.5 inches. There are two sections: pulser itself and capacitor section. Pulser/capacitor block shown in next figure.
Undulators have opposite helicities; however the only one at the time can be feed. Other can be considered as a spare one.
Hydraulics post requires also a 3 Phase 208 Volt (4 wires, one neutral) plus ground wire.

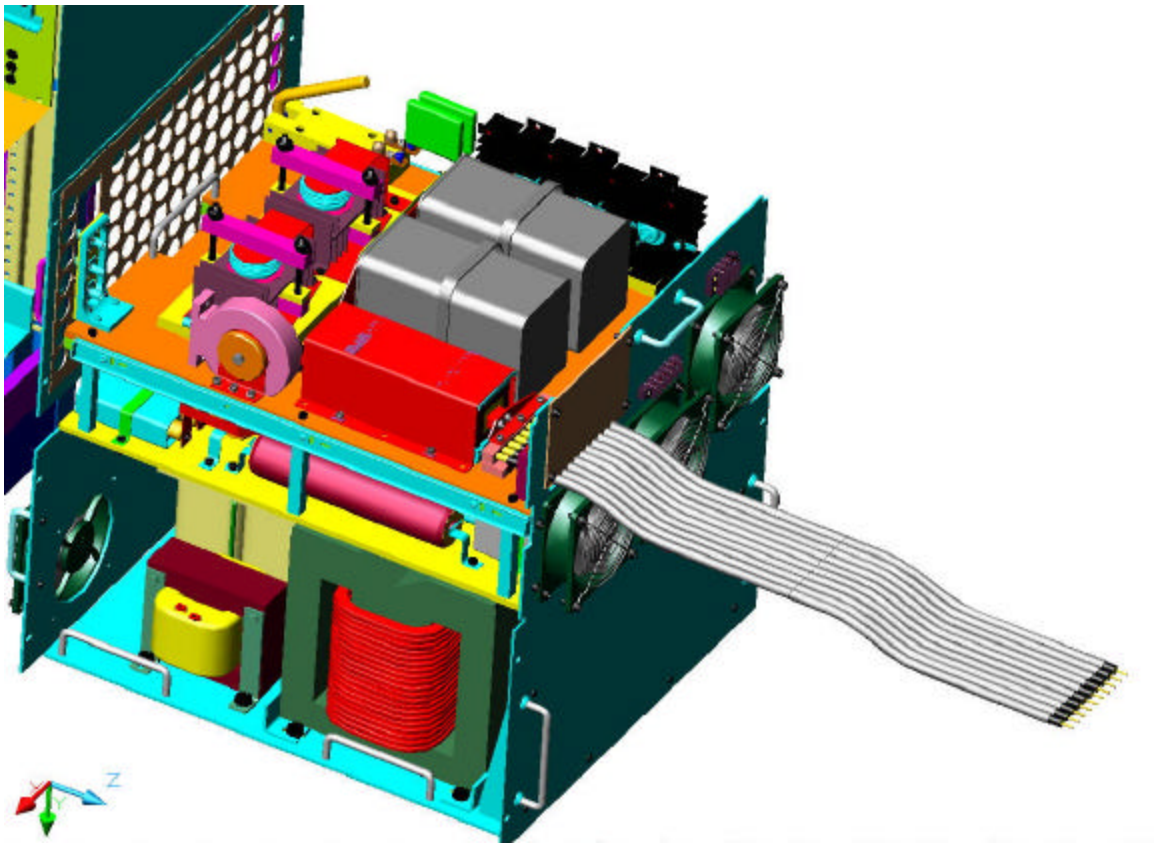

Figure2: Pulser and capacitor block.

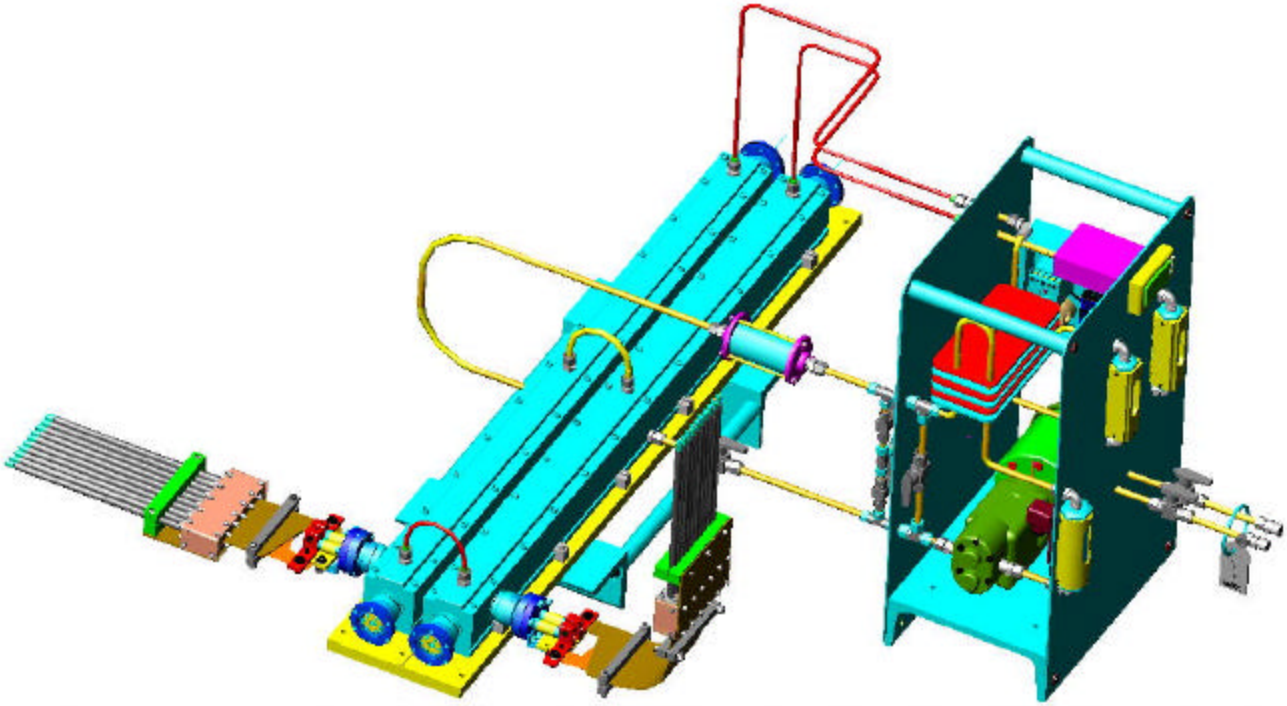

Figure 3: The undulator set and the hydraulic post.

Undulators final dimensions machined in these two undulators in one set, based on Aluminum plate. The plate has dimensions 46x8x1 inches made from Aluminum 7075. So the axes are parallel with machine accuracy within 0.3 mils. Length of undulator from flange to flange is 45 inches. The axes spacing is 3.6 inches. Flanges -2 ¾ inch.

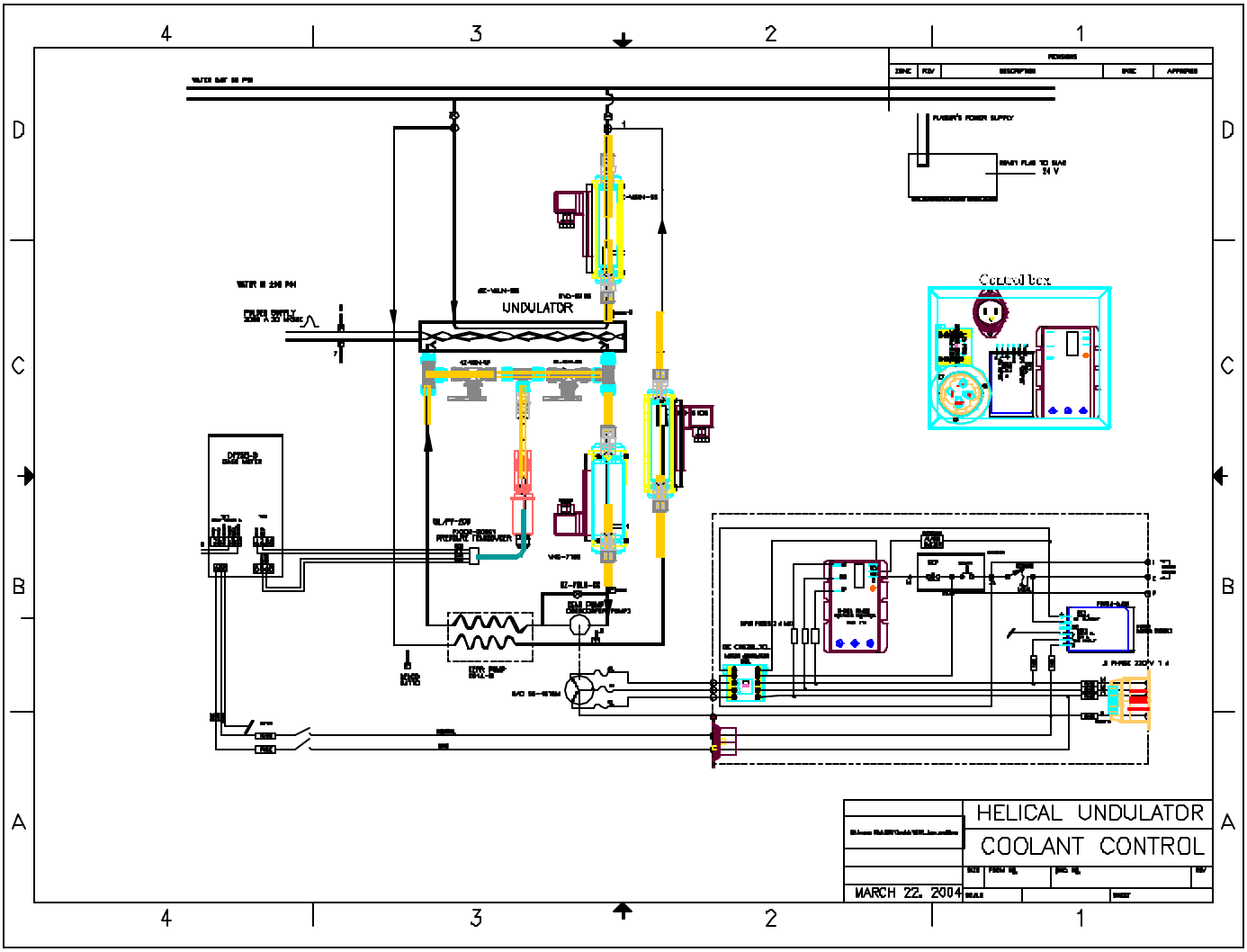

Ready chains and controls for Hydraulics.

Control box assembled. Ready chain box assembled. Bodies of undulator ready. Pulser assembled ~80%.

[1] See in: A.Mikhailichenko, *"Pulsed undulator for test at SLAC the Polarized Positron Production"*, PAC 2003, also CBN 03-5; http://www.lns.cornell.edu/public/CBN/2003/CBN03-5/CBN03_5.pdf, *Cornell University, LEPP, Ithaca NY 14853, USA*