Critical and Conceptual Design Review: Polarized Target System for E159 and E161

Donald Crabb
University of Virginia

John Weisend
SLAC

May 5, 2001

1 Overview

Of the three experiments, E159, E160, E161, approved to run in ESA with a polarized real photon beam, E159 and E161 will run with a polarized target. However the major components of the polarized target are defined by the requirements of E161, but the adjustment in the parameters of these components is sufficient to optimize the system for E159 running.

1.1 Critical Design Review

There are two major subsystems which have long lead times for purchase. They are discussed in more detail below:

1) A 7T solenoid magnet, a critical part of the polarized target, as discussed below. It also contains dipole coils for manipulation of the spins. From Oxford Instruments, 18 months ARO.

2) A tube to generate microwaves at around 180 GHz. An EIO tube from CPI Canada, one year ARO

1.2 Conceptual Design Review

Other major subsystems which are discussed in detail below are:

1) Dilution refrigerator

2) Dry, sealed Roots Pump system, 2000 m^3/hr pumping capacity for circulating ^{3}He.

3) Dry, non-sealed Roots pump system, 1000 m^3/hr pumping capacity for pumping ^{4}He and cooling the circulating ^{3}He.

4) Other pumps for ^{4}He (eg compressors for separator) and ^{3}He recovery pump.

5) ^{3}He

6) Dewars and transfer lines for liquid helium supply to magnet and dilution refrigerator.

7) Instrumentation for dilution refrigerator eg temperature, fow and pressure measurement

8) Microwave components for 180 GHz microwaves and high voltage power supply for EIO tube

9) NMR system for polarization measurement

10) Controls for cryogenic supplies

2 Polarized Target Optimization

Briefly, the requirement for E161 is to have the highest average polarization per nucleon as possible. From all the possible polarized target materials this need is best met by ^{6}LiD. This material has the highest number of polarizeable nucleons per total nucleons (naively 0.5) due to the fact that, most of the time, lithium can be considered as a deuteron plus a spinless alpha particle[1]. Measurements show that the polarization of the Lithium is equal to that of the deuteron and with high enough magnetic field and low enough temperature, polarizations well in excess of 60% can be obtained. Figure 1. [2]shows the deuteron polarization obtained in several different refrigerator systems at various magnetic fields.

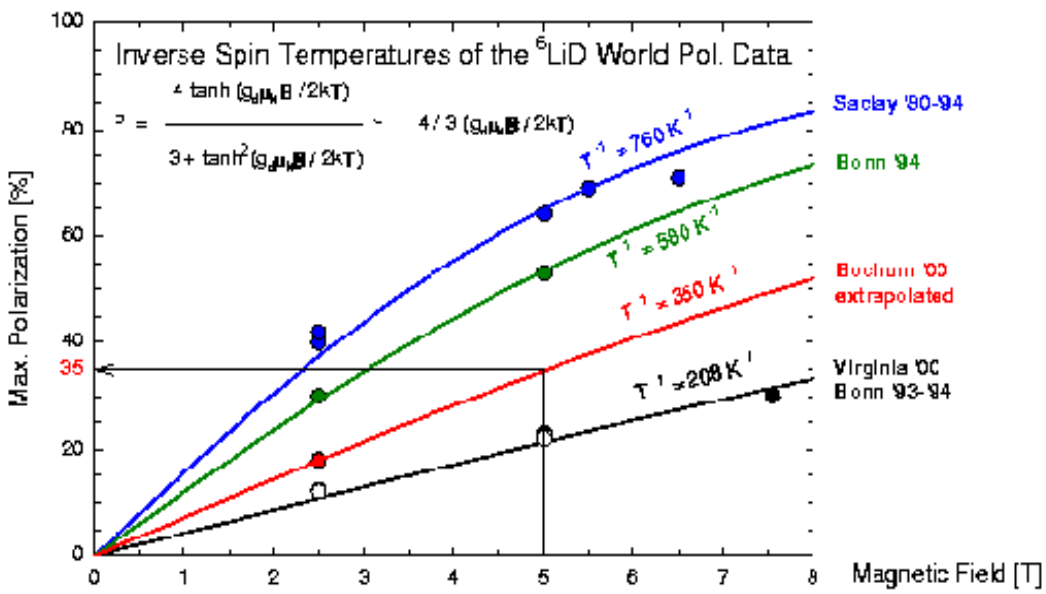

^{6}LiD polarizations as a function of magnetic field for different polarizing temperatures

The graph shows the maximum polarizations obtained at different magnetic fields under various cryogenic conditions. Though not particularly relevant for this discussion, a fit to the data gives a consistent picture in terms of the inverse spin temperature for each set of measurements. The spin temperature is defined

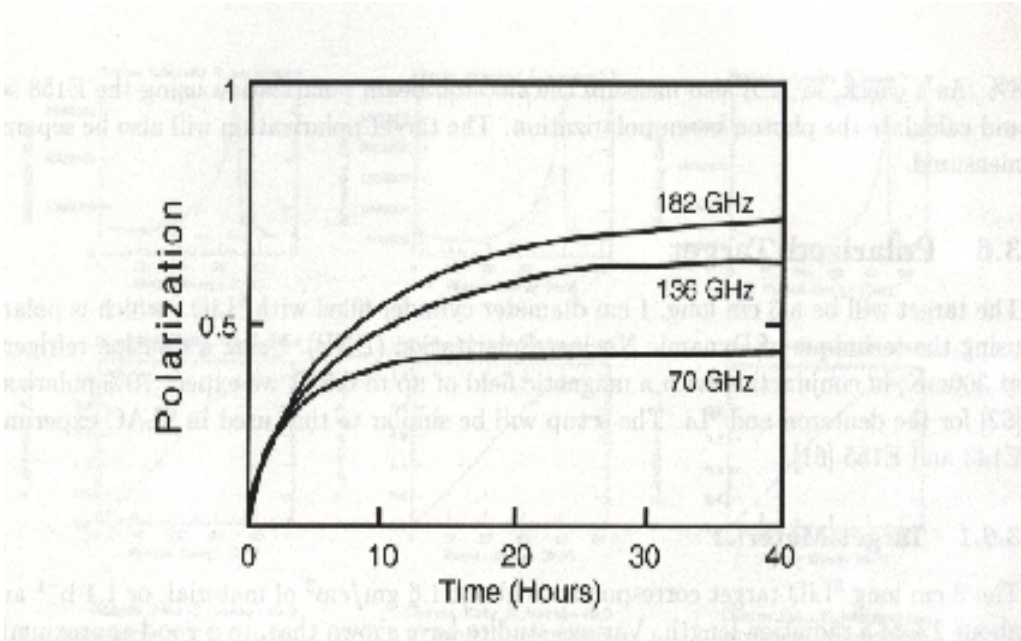

Figure 1: Polarization buildup for ^{6}LiD for three magnetic fields. 182 GHz $\Longrightarrow$ 6.5T, 136 GHz $\Longrightarrow$ 4.9T, 70 GHz $\Longrightarrow$ 2.5T

by the temperature of the bath around the target material. For instance the polarizations in the bottom curve were measured at a thermal temperature of about 1K using a ^{4}He evaporation refrigerator. Polarizations of 60% - 70% are obtained by working in the region of the Bonn '94 and Saclay '80 - '94 curves with a ^{3}He-^{4}He dilution refrigerator. Though difficult to measure and dependent on microwave power, the quoted temperatures for the Saclay and Bonn measurements are in the range 200 - 400 mK. For the best results we will require a field in the range of 6.0 - 7.0Tesla. The actual field we run at will be defined by the microwave tube frequency and the power obtainable at that frequency. The best compromise is obtained by operating at a microwave frequency of around 180GHz and therefore a magnetic field of about 6.5GHz.

Another issue is the rate of polarization. As seen in Fig. 2, the data from Bouffard et al[3],also shown in Fig.1 in the top curve, the polarization reaches a maximum after 30 - 40 hours of polarizing although acceptable values are reached after polarizing for about 10 hours. The actual polarizing times will depend on the particular cryogenic conditions and in our case we can expect times of at least many hours. In general much of the initial polarization can be done in advance of the beam, but the problem arises in reversal of the polarization, To ameliorate the waiting time we can use another technique to reverse the spins, i.e. magnetic rotation, the adiabatic reversal of the polarization direction

by rotating the magnetic holding field by 180 degrees. The holding field is a combination of solenoid and dipole fields. In this method the solenoid polarizing field is ramped down from its operating field, 6.5T (say) to about 0.5T, when a dipole field normal to the solenoid field is switched on and ramped up. As the solenoid field goes through zero, the dipole field is at its maximum value. The dipole field then ramps down as the solenoid field ramps up to -6.5T. Meanwhile the spins have been pulled around to point in the opposite direction. The requirement for small polarization loss is that the fridge temperature be low. Measurements made recently for us by members of the COMPASS collaboration [2] show that for our conditions (120mK, 0.4T) the relaxation time for ^{6}LiD is 50 hours. The time that the spins see fields around 4T is relatively short and therefore little polarization will be lost.

3 System Requirements

The major items required for this polarized target system are:

3.1 Magnet

This will be a superconducting solenoid capable of operating at fields up to 7T. The target material will occupy a volume of 1cm diameter and up to 5cm long and the field uniformity over this volume will be one part in 10^4. There will also be a dipole field normal to the solenoid field capable of providing up to at least 0.4T at the target, 0.5T is desired. The solenoid will be operated with its field horizontal, will have a warm bore of diameter 20cm and an aperture at one end such that particles produced in the center of the target will have an opening of $\pm 20°$. Figure 3 shows an outline drawing of the magnet as proposed by Oxford Instruments.

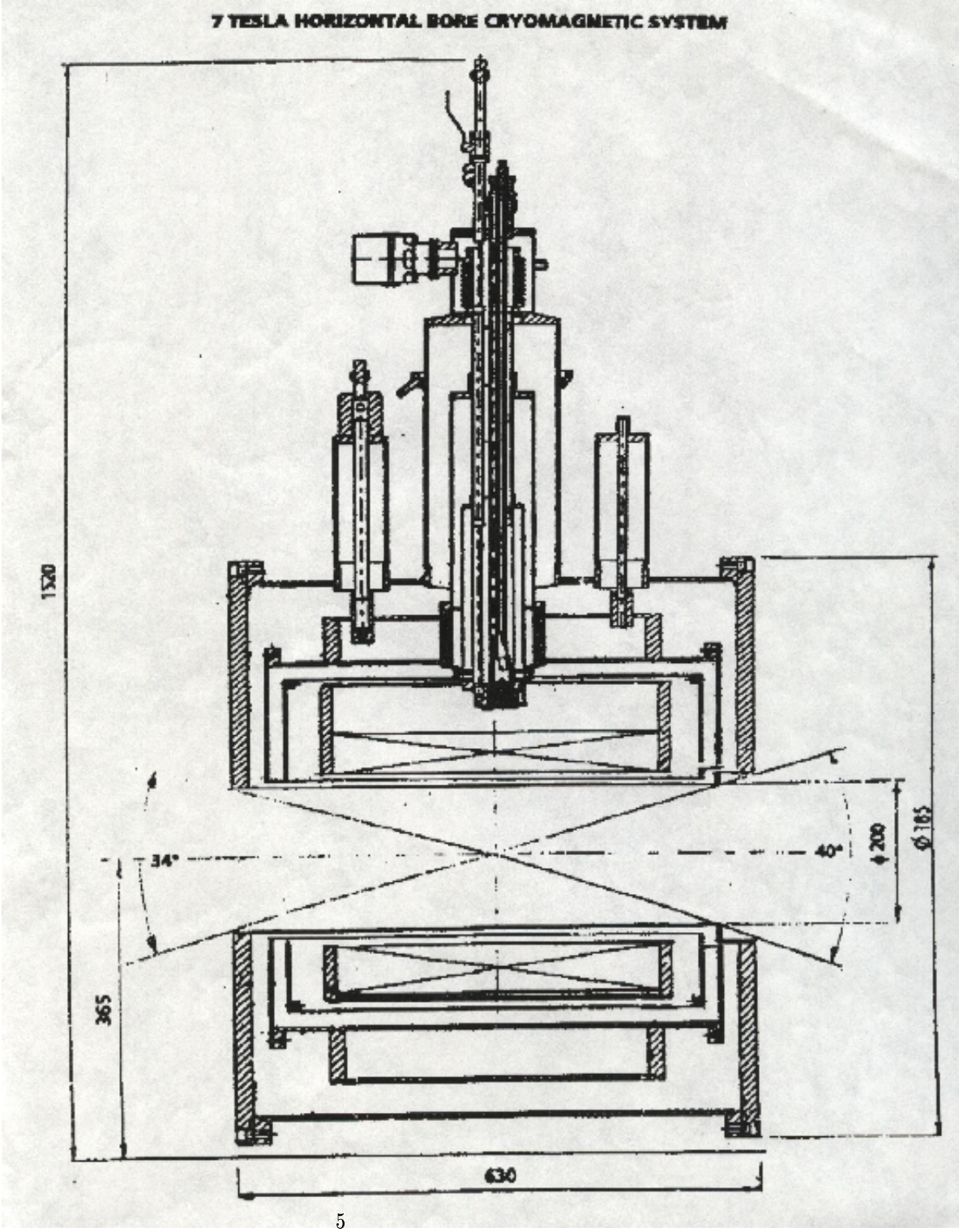

Proposed 7T solenoid from Oxford Instruments. Dipole coils not shown.

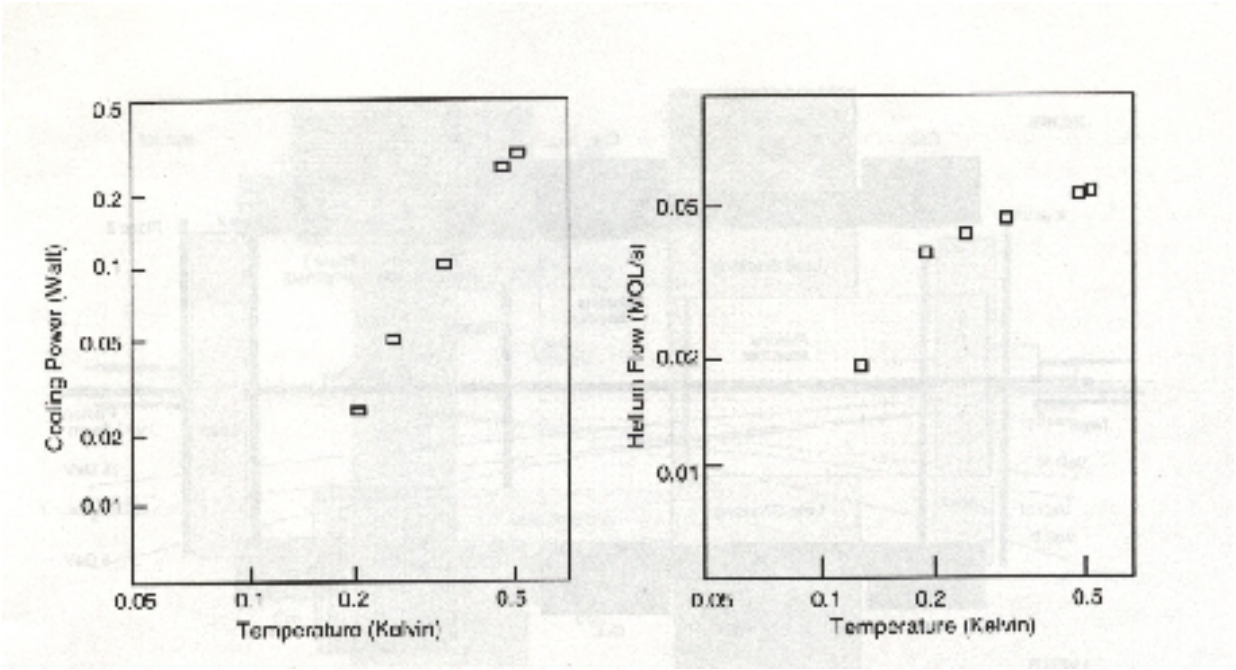

Figure 2: Cooling power and gas circulation rate vs. mixing chamber temperature. The pumping capacity was smaller than that proposed.

3.2 Refrigerator

This will be a high power dilution refrigerator, capable of operating at 300mK - 400mK (with microwaves on) and a cooling power of at least 100mW. The refrigerator will operate with its axis horizontal and allow the photon beam to travel along its axis. A base temperature of 120mK is the goal and a simple and rapid means of loading the target material at liquid nitrogen temperatures is required. Figure 4 shows the cooling power and ^{3}He gas circulation rate plotted against mixing chamber temperature for this refrigerator with a smaller capacity pumping system than proposed.

3.2.1 Pumps

A dilution refrigerator circulates mostly ^{3}He and therefore the pumps need to be sealed. In order to obtain the necessary circulation a Roots pumping system of approximately 2000 m^3h^{-1} is necessary to provide the required gas circulation and cooling power.

The evaporator of the ^{4}He cooling system will require a pumping capacity of about 1000 m^3h^{-1}. An unsealed Roots pump with appropriate backing pump(s) will meet the requirement. The separator will require compressor type pump(s)

of the Metal Bellows or KNF Neuberger type.

Two isolating vacuum pump sets are required; for the main IV a 300 l s^{-1} diffusion or turbo pump set will suffice; for the insert vacuum space a smaller , ~100 l s^{-1} is adequate.

A small sealed pump of ~3 m $^3h^{-1}$ is required for recovering ^{3}He from the gas panel.

3.3 Microwaves

A high power microwave tube operating around 180GHz is required to enable the polarizing process. The output power will be at least one watt, preferably higher. A tuning range of about 200MHz is necessary, higher is desirable, but not at the expense of a decrease in available power.

Microwave components, such as waveguide, couplers, adaptors and power and frequency measurement are also required. The components used at our normal 140 GHz are not useful in this new operating band

3.4 NMR

The measurement of the NMR polarization is made by the standard Liverpool Q-meters controlled by LabView. Other equipment includes a signal generator, signal conditioning cards and amplifiers. So far Labview has been run on the Windows 98, NT and 2000 platforms with the possibility of Linux in the future.

4 Acquisition, Cost and Delivery

There are several items with a long delivery time ($\gtrsim$1 year) which should be ordered in the near future so as to not compromise the test and commissioning of the complete system.

4.1 Magnet

The proposed magnet is shown in Fig. 3 and in the quote from Oxford Instruments which is attached. The cost of the magnet itself including the cryogenics and retrofitted (in the sense of being an add-on to the original solenoid design) dipole coils is $234,849. Additional items such as solenoid power supply, cryogen level meters, transfer line and installation amount to $21,096. Not incuded is a power supply for the dipole. Some of these additional items maybe can be supplied by SLAC. The quoted delivery time is 18 months ARO.

4.2 Refrigerator

The proposed refrigerator is shown in Fig. 5. It was operated at CERN and is now, along with many other components, at UVA. It has to be assembled and modified for our use. The operating system will be delivered to SLAC

by
per

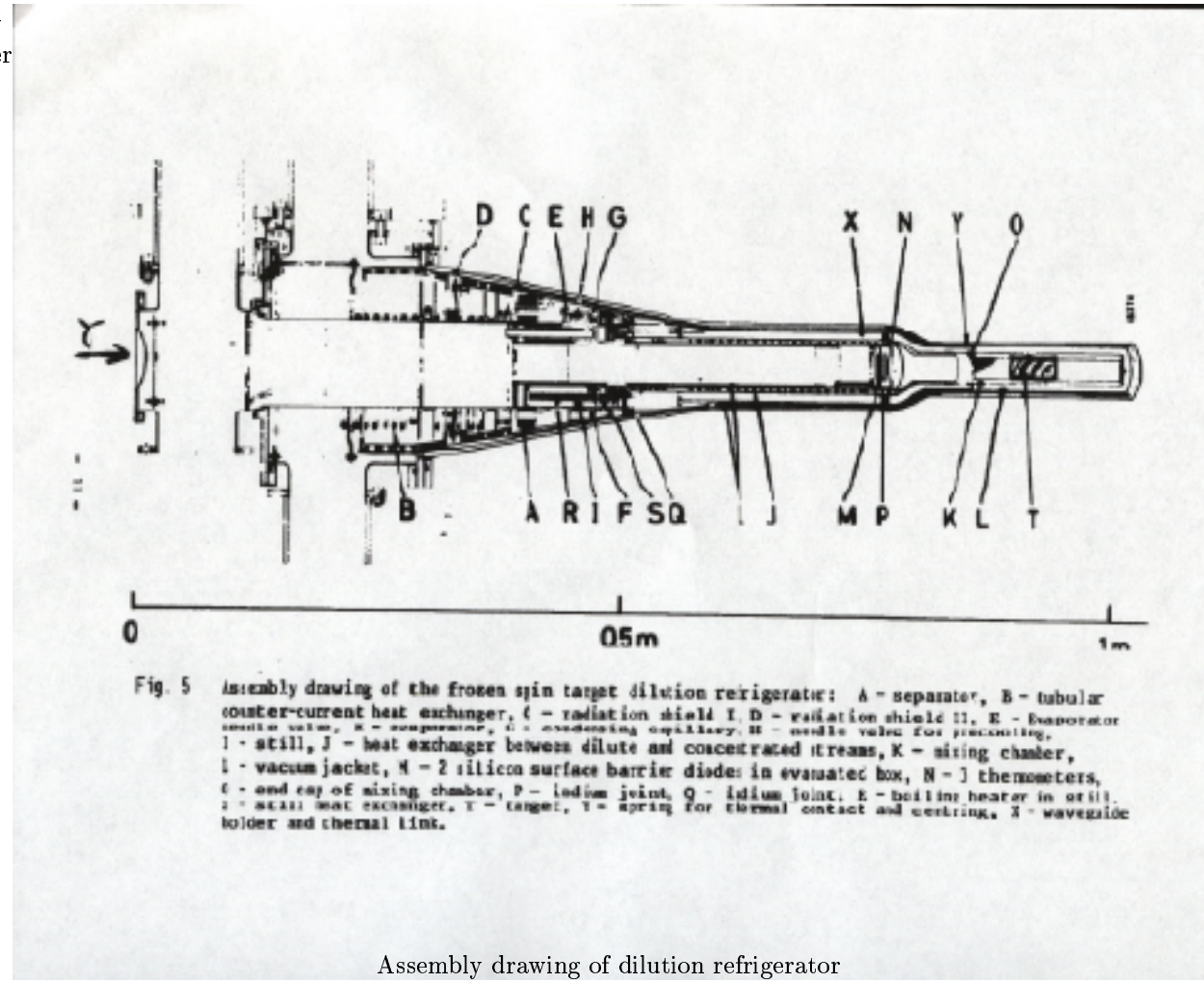

Fig. 5 Assembly drawing of the frozen spin target dilution refrigerator: A - separator, B - tubular counter-current heat exchanger, C - radiation shield I, D - radiation shield II, E - Evaporator needle valve, F - compressor, G - condensing capillary, H - needle valve for precooling, I - still, J - heat exchanger between dilute and concentrated streams, K - mixing chamber, L - vacuum jacket, M - 2 silicon surface barrier diodes in evacuated box, N - 3 thermometers, O - end cap of mixing chamber, P - indium joint, Q - indium joint, R - boiling heater in still, S - still heat exchanger, T - target, U - spring for thermal contact and centring, X - waveguide holder and thermal link.

Assembly drawing of dilution refrigerator system.

4.2.1 Pumps

A quote from Balzers for a 2000 m^3h^{-1} Roots system is attached. The "dry" option is required because the gas is recirculated and, despite filtering, oil contamination is a problem with more traditional pumps. The cost is $92800 with a four month delivery.

The other pumps have not yet been costed.

4.3 Microwaves

A quote is attached from CPI Canada for a ~180GHz EIO tube. The range of center frequency is a function of the control on various mechanical tolerances. A

power output of 1W is guaranteed. The specified beam current and voltages can be accommodated by two power supplies currently on hand at UVA. However, at least one will be operated for six months in an upcoming experiment at JLAB.

The cost for one tube is $95,000, but if this purchase can be coordinated with one by UVA as set out in the quote, then the price per tube drops to $90,000. The delivery is up to 12months ARO.

Frequency and power measurement devices and various pieces of waveguide will also be necessary. Very little can be carried over from our 140GHz operation.

4.4 NMR

For the most part the major NMR hardware currently in use will be used in E159 and E161. An issue will be the platform to be used for LabView. Currently we are changing from Windows 9* to Windows 2000 for an experiment at JLAB this summer. Linux has been considered but crucial hardware drivers are currently not available. This situation will likely change over the next two years.

4.5 E159 Considerations

As detailed in the proposal, E159 will run with ammonia target material at 5T. These are the conditions under which E143, E155 and E155x ran. This means that the microwave system will operate at around 140GHz as at present so no new microwave hardware is foreseen. We will likely replace the ^{3}He/^{4}He mixture in the dilution refrigerator with pure ^{4}He to reproduce more closely the conditions prevailing in the previous experiments and have enough cooling power available. It may be necessary to add further Roots pumping capacity, but this will have to be measured in commissioning. This however need not be a sealed pump.

5 ESA Interfacing

Interfacing of the target and magnet with ESA system resources will require little modification from that pertaining in the previous experiments.

5.1 Cryogens

Liquid helium was supplied to the superconducting magnet from a 500l buffer dewar. Helium for the refrigerator was siphoned directly from the magnet. For E161 (and E159) the magnet and refrigerator are decoupled and therefore will have separate helium supplies. Originally the buffer dewar was supplied from a 2000l transport dewar, but with the availability of the direct feed from a liquefier via a transfer line into ESA, the problems of transporting a dewar in and out can be avoided.

Liquid nitrogen was supplied to the magnet from a transport buggy in ESA and will be again.

The controls previously used for controlling the supply of cryogens to the device are obsolete and no longer available. Therefore new control software/hardware must be obtained.

5.2 Gases

Only helium and dry nitrogen gases are needed for various target manipulations

5.3 Power

The major power requirements are for the pumps. Typically the Roots set operates with 100A service at 208V. Alternatively they might be wired for 460V. The microwave tube will operate with a line conditioner and spike suppressor. It is preferred that the magnet power supply run on clean power or use a UPS. The same is true for the NMR system.

5.4 Vacuum

Vacuum pumps (preferably turbos) are required for the magnet and for the outer vacuum of the refrigerator and for the inner vacuum of the refrigerator.

ITEM	TO BUY or TO DO	ON HAND SLAC	ON HAND UVA	COST $	DELIVE RY
Solenoid	■			255945	18 months
EIO Tube	■			95000[1]	12 months
^{3}He Roots pumps	■			93000	4 months
Turbo pumps for IV		■ ?			
^{4}He Roots pumps	■				
Compressors	■ ?	?	?		
Flow/Pressure	■	■	■		
Dewars/transferlines		■	■		
Instrumentation	■	■	■		
NMR (Analogue)			■		
NMR (Digital)	■	■	■		
Microwave	■ [2]		■ [3]		
Dilution Fridge			■		
Target Material	■ ?		■		
Interfacing	■				
^{3}He		■	■		

Notes: 1. See quote. $90K each if two ordered

2. 180 GHz hardware (wave guides, frequency and power measurement etc) for E161.

3. 140 GHZ hardware for E159

6 Assembly and Installation Schedule

The refrigerator will be assembled and tested at UVA with in-house pumps. After the magnet is delivered to UVA a full system test, including polarization can be carried out and the system commissioned ready for shipment to SLAC.

At SLAC the complete system will be assembled onto a cart somewhere outside of ESA and recommissioned for the new environment.

6.0.1 Schedule

Acquire long lead time items	6/1/01 - 12/3/02
Assembly and test at UVA	5/02 - 12/3/02
Commission at UVA	12/3/02- 6/3/03
Commission at SLAC	6/03 - 12/3/03
Installation in ESA	12/03 - 3/04

References

[1] O. A. Rondon, Phys. Rev. **C60**, 035201 (1999)

[2] S. Goertz, U. of Bochum, Germany, Private Communication

[3] V. Bouffard et al., J. Physique, **41**, 1447 (1981)