Compton/Moller Polarimeter

R.Avakian

Yerevan Physics Institute

- **Polarimeter**
  - **main charachteristics**
  - **Compton vs Moller**
- **Detector system**
  - **cross sections and FOMs**
  - **energy reconstruction of photons**
- **Summary and Plans**

Polarimeter: new design

- **Large low energy photon background.**
- **Large cross section of Compton scattering for low energy photons**
- **Calrimeter possible failure to measure high energies due to overload by low energy photons.**

Advantages of electron detection

- **Equipment partially available at SLAC**
- **Moller and Compton kinematics similar**
- **Background under control**

  pair production from nuclei (dominant)

  electrons from triplet production (minor)
- **Changing the magnetic field direction allows to measure positrons from pair production background.**

Polarimeter: mask

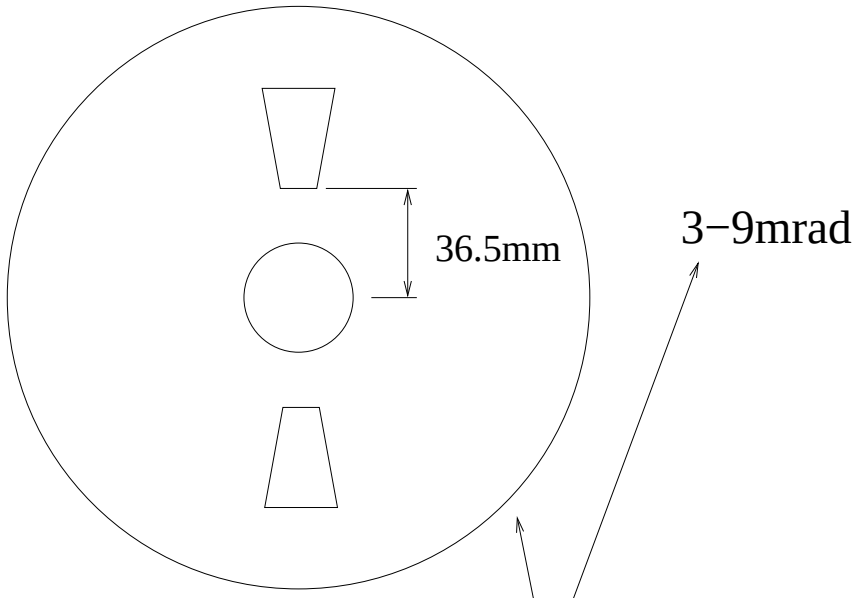

Existing mask OK for 37.5 GeV

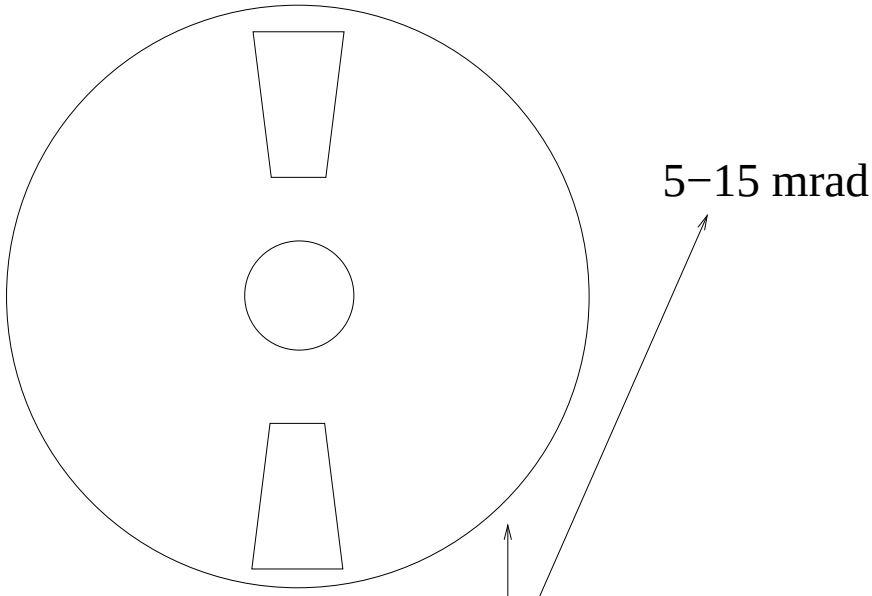

New mask needed for 10 GeV

Polarimeter: angular dependence

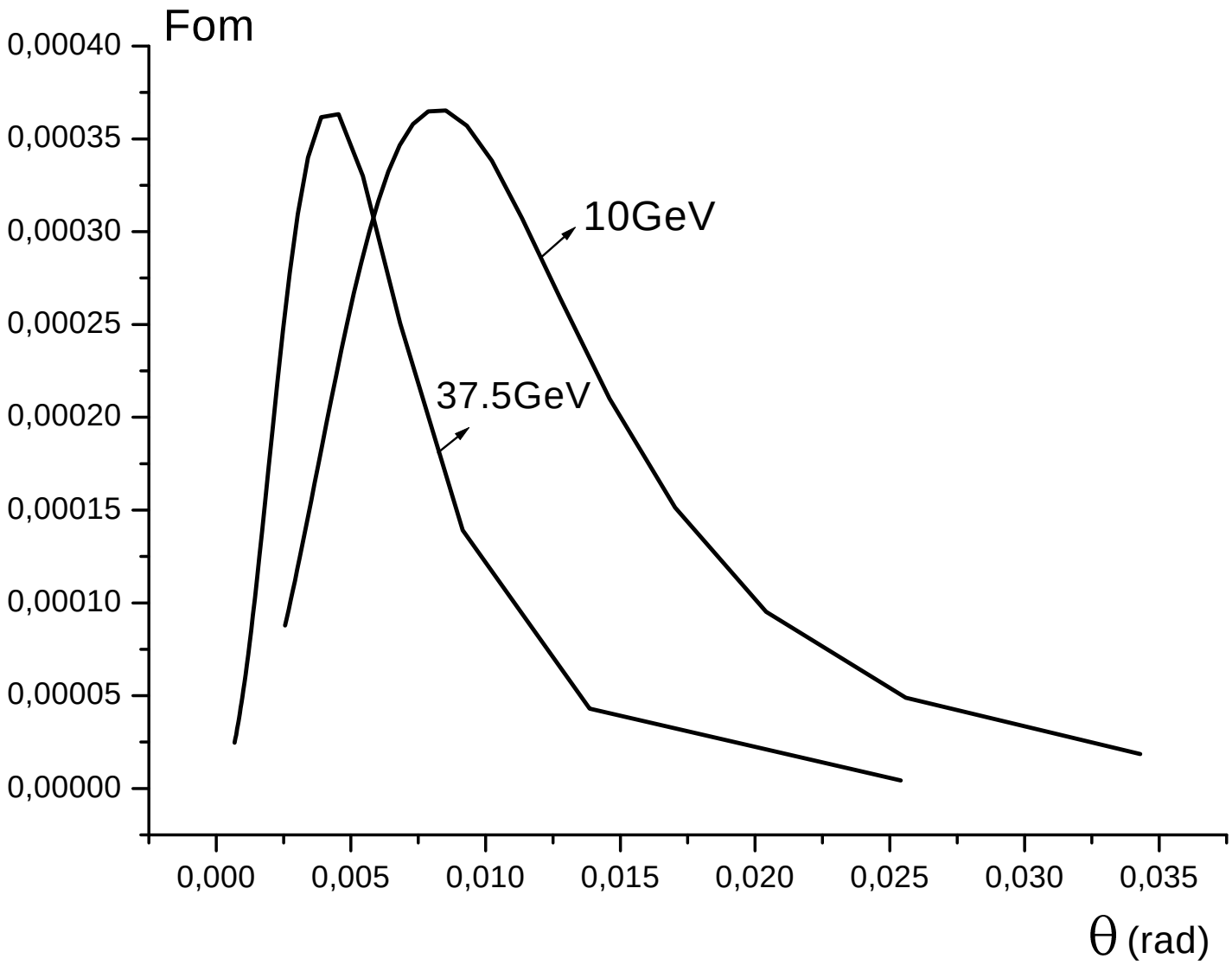

Polarimeter: FOM at 37.5 GeV

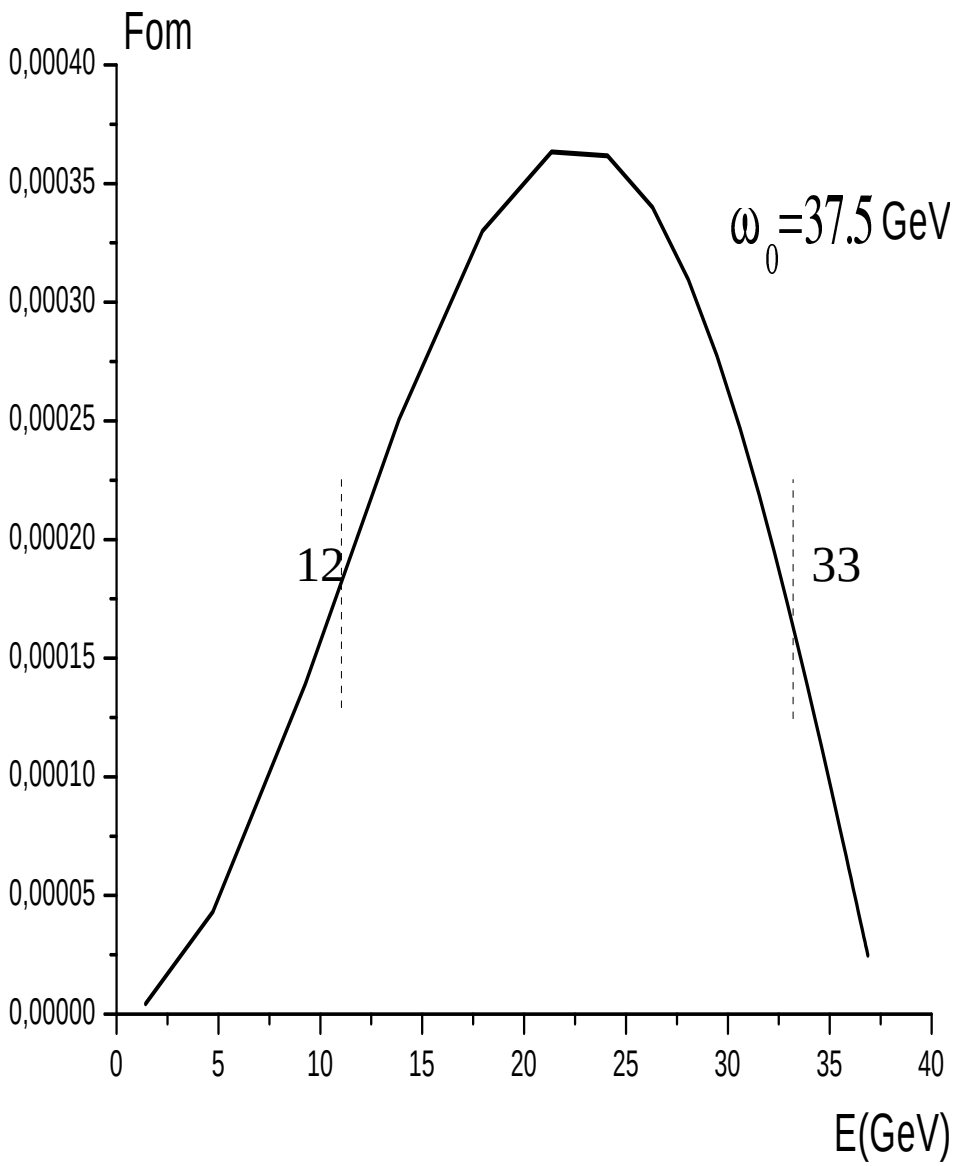

Detector dimension ∼ 80cm.

Polarimeter: FOM at 10 GeV

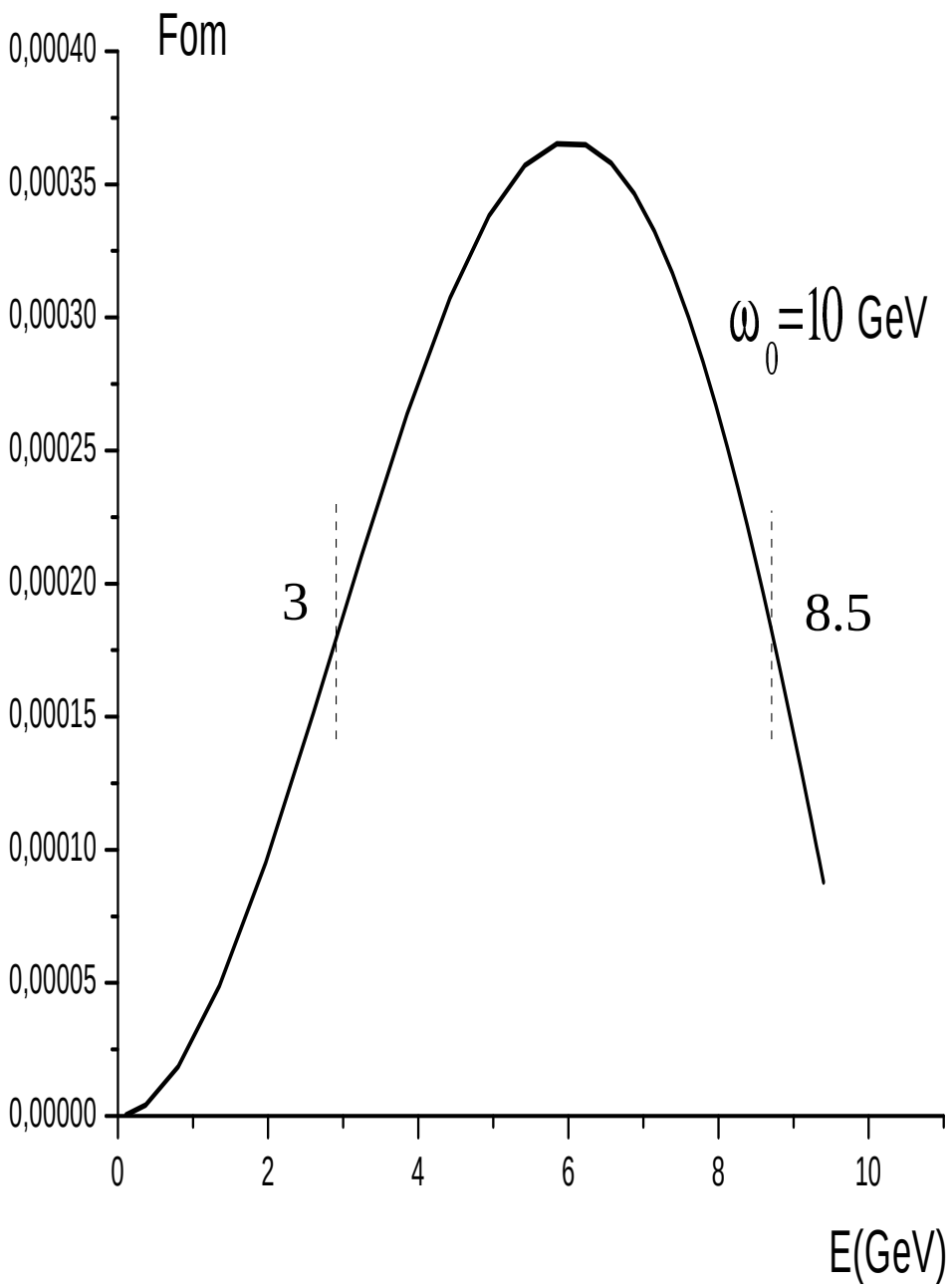

Detector system: dimensions

- **Sensitive energy range**

$$\omega_0 = 10GeV \rightarrow 3 < E_e < \mathbf{8\ GeV}$$
$$\omega_0 = 37.5GeV \rightarrow 12 < E_e < \mathbf{33\ GeV}$$

- **Dimensions for** $\omega_0 = 37.5GeV$

$$8 < E_e < 30GeV \rightarrow 137cm$$
$$12 < E_e < 30GeV \rightarrow 80cm$$
$$15 < E_e < 30GeV \rightarrow 55cm$$

Reconstruction accuracy

- **With 1 cm hodoscope (horizontal)**

  For 30 GeV $\rightarrow \frac{\Delta p}{p} \sim$**2%**

  For 8-9 GeV $\rightarrow \frac{\Delta p}{p} \sim$**0.6%**

- **Moving detector to magnet**

  dimension decrease

  $\frac{\Delta p}{p}$ **increases**

- **Reduced energy range**

  dimension decrease

  polarization measurement time increases

Polarimeter: Calo

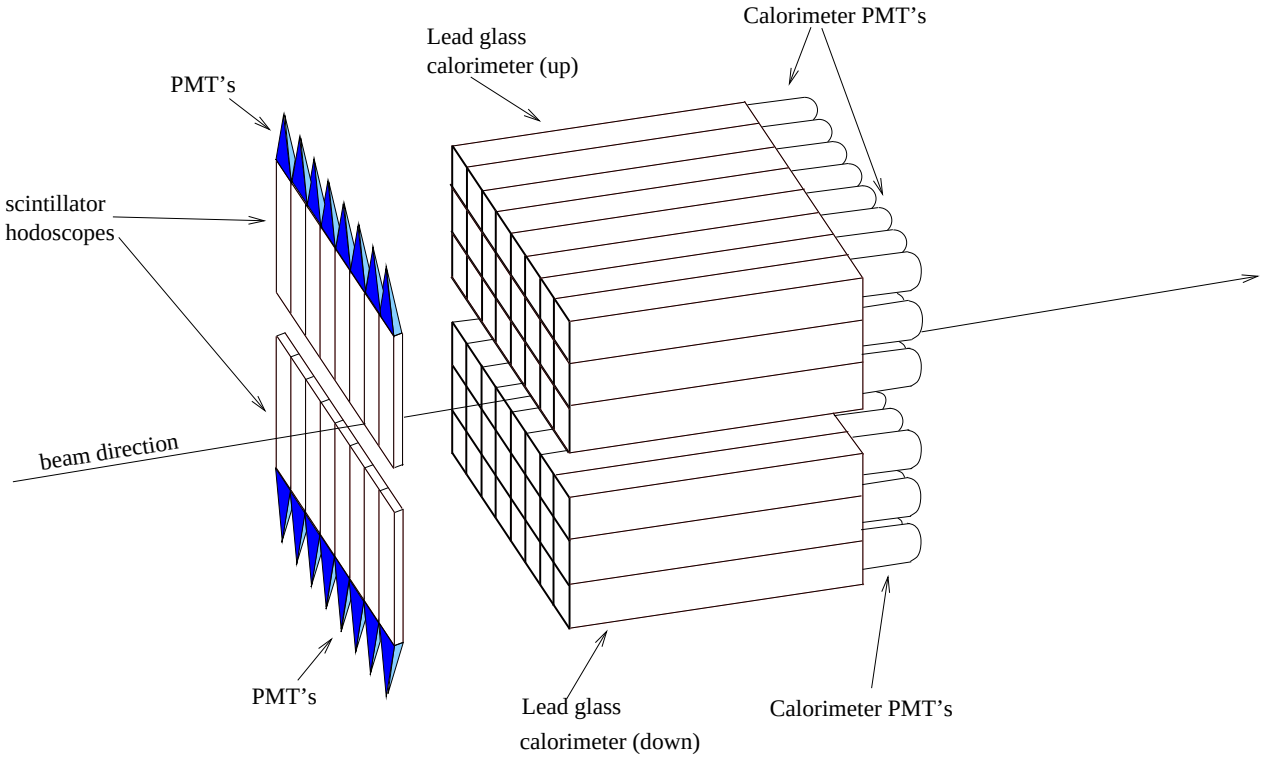

Polarimeter: energy dependence

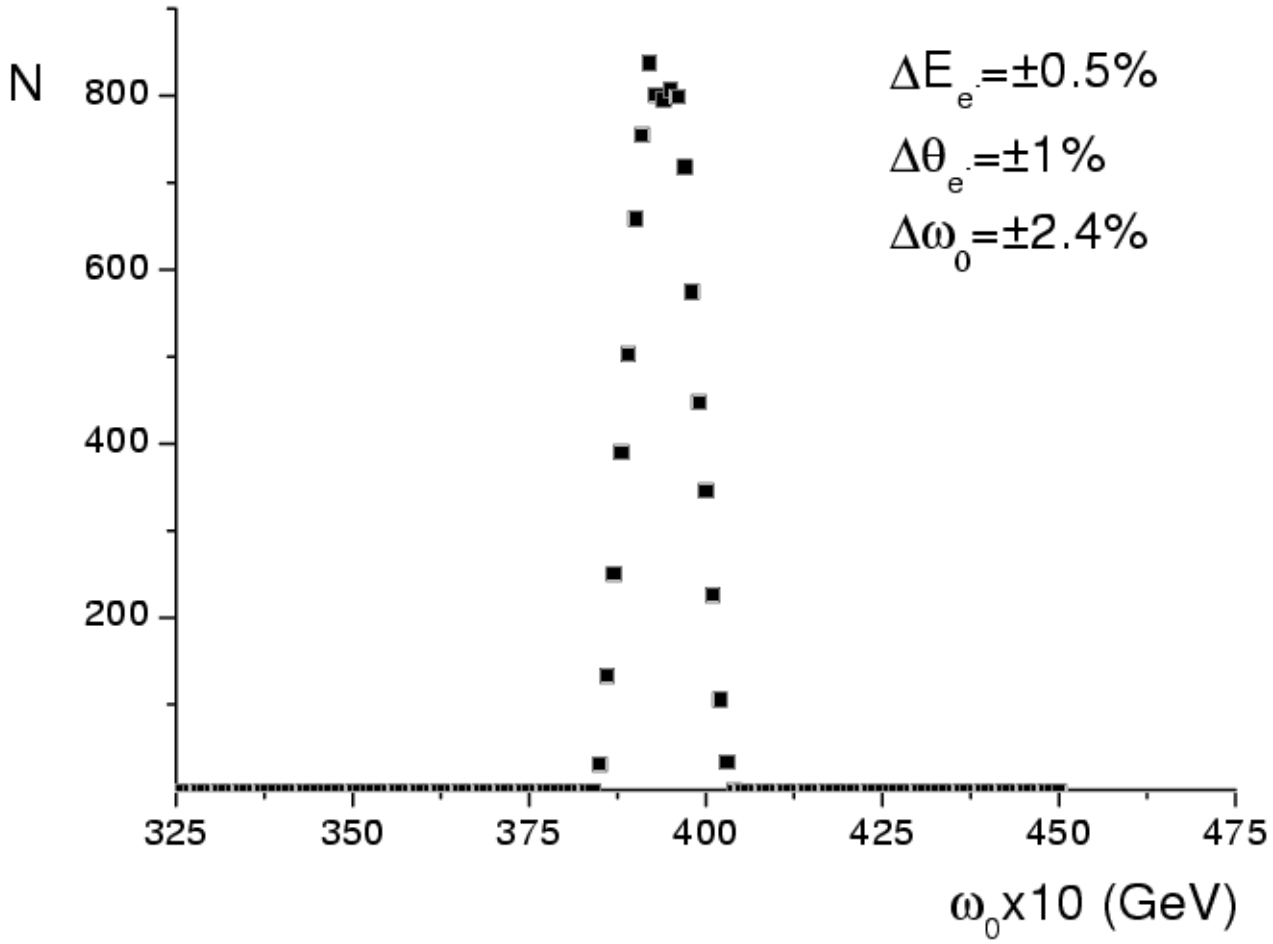

Polarimeter: energy dependence

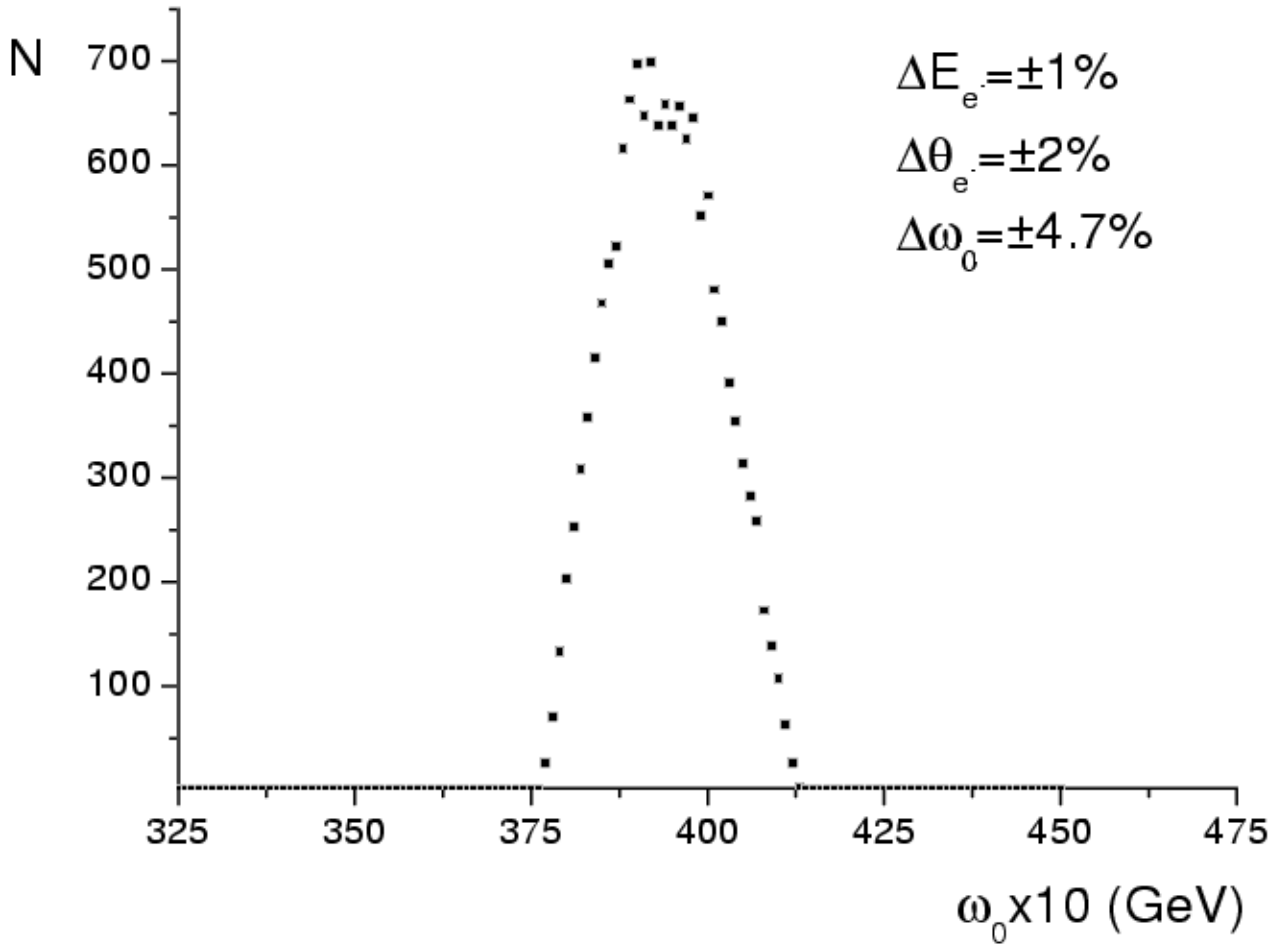

Polarimeter: energy dependence

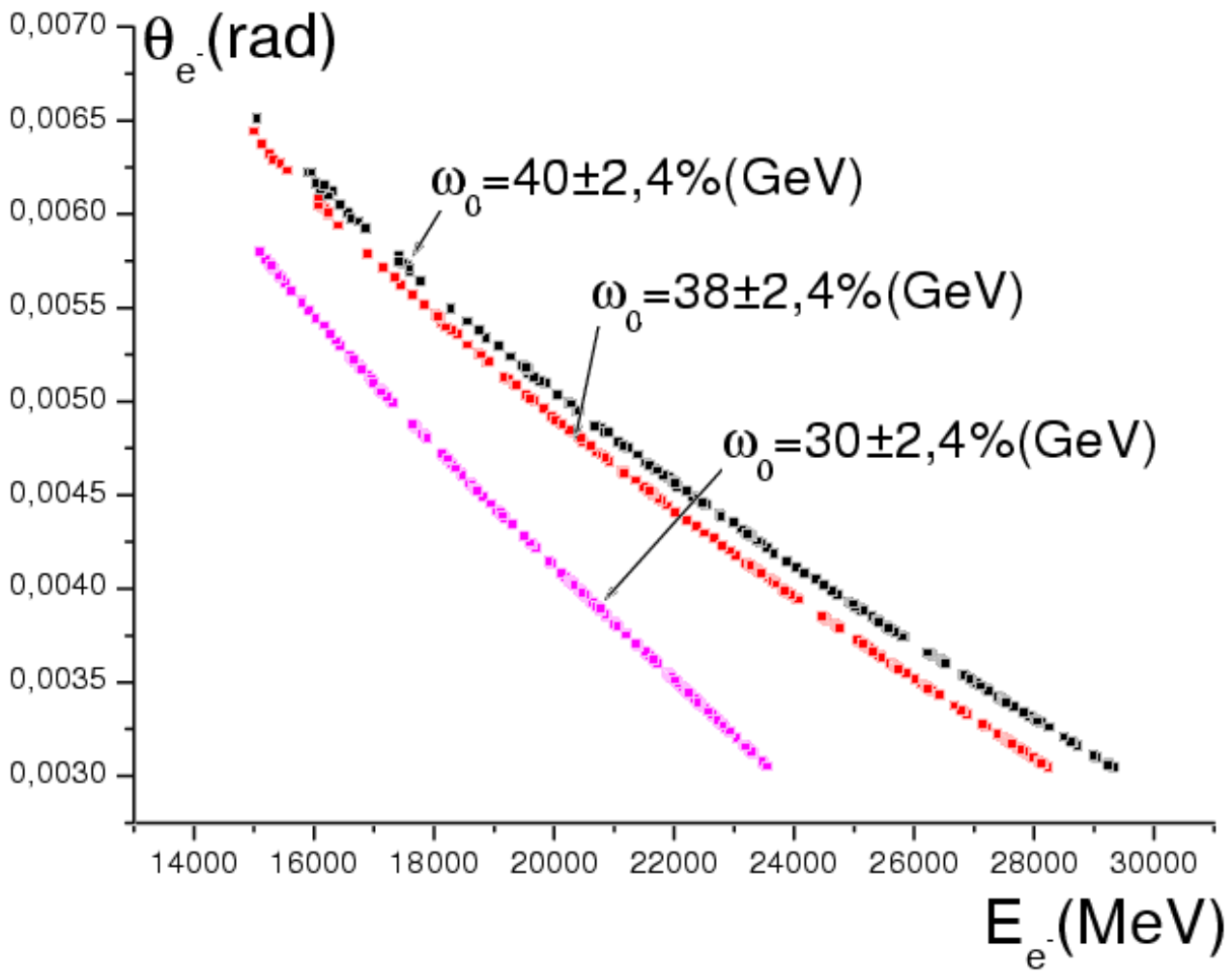

Summary

- **Compton polarimeter on base of Moller polarimeter**
- **To reconstruct the initial photon energy with accuracy $\sim 2.4\%$ we need to measure the energy of scattered electron with accuracy 0.5% and angle $\Delta\theta$ ~1%.**
- **Wire chambers needed for precise measurement of electron scattering angle.**