UCLA's Technical Capabilities and Resources

Vahe Ghazikhanian

UCLA Dept. of Physics & Astronomy

UCLA Team Members

Vahe Ghazikhanian, George J. Igo,

Dylan Thein, Stephen Trentelange,

Charles A. Whitten

Scope of the STAR related Detector R&D at UCLA

- STAR TPC Gating Grid Driver system.
- STAR TPC Pad plane Gain Monitoring system.
- STAR Magnet Mapping.
- PMT testing and characterization.
- Production of PMT high voltage system.
- Production of PMT housing components.
- Shower Maximum Detector Module Production and Testing.

STAR Detector

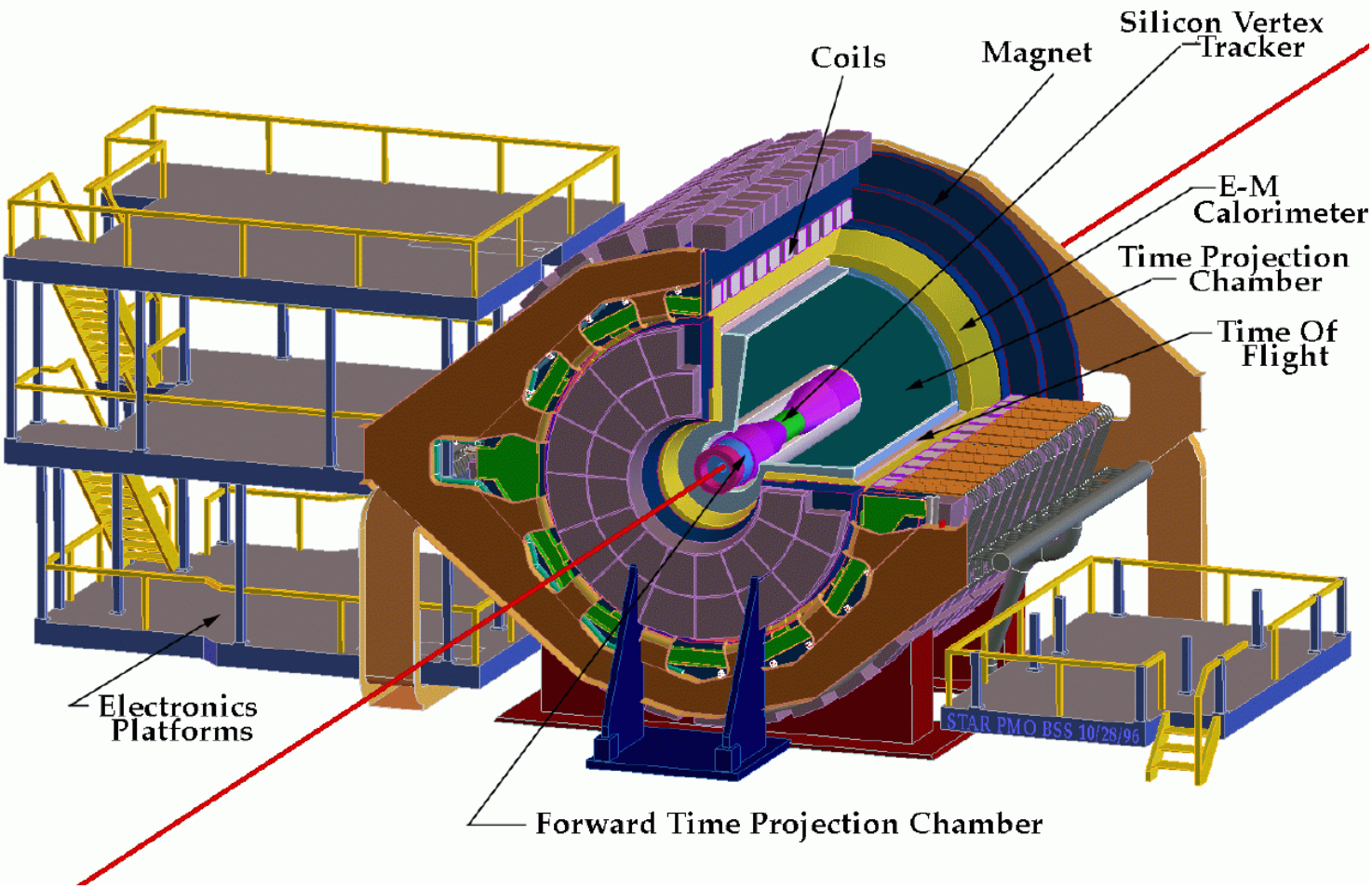

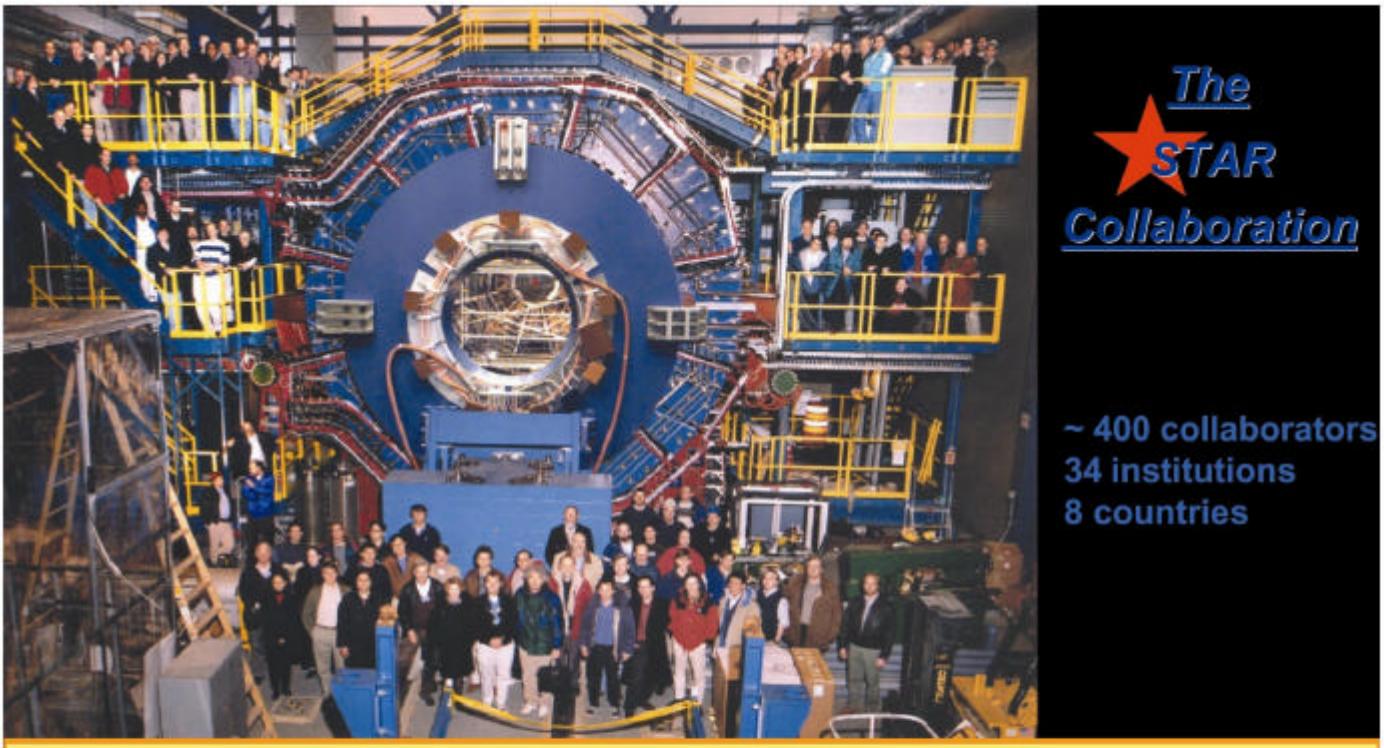

Brazil: Sao Paolo
England: Birmingham
Germany: Frankfurt, MPI - Munich
China: IHEP - Beijing, IPP - Wuhan
France: IReS - Strasbourg, SUBATECH-Nantes
Poland: Warsaw University, Warsaw U. of Technology
Russia: MEPHI - Moscow, JINR - Dubna, IHEP - Protvino

U.S.: Argonne, Berkeley, Brookhaven National Laboratories
UC Berkeley, UC Davis, UCLA, Creighton, Carnegie-Mellon, Indiana, Kent State, MSU, CCNY, Ohio State, Penn State, Purdue, Rice, Texas, Texas A&M, Washington, Wayne, Yale Universities

PMT Testing/Characterization

- An automated test system was designed and built to test linearity dark current, and measure gain as a function of HV (see Figure 1-3).

- Gain, linearity and dark current are measured for each pmt using the pmt test system.

- Data obtained from tests is analyzed, gain vs. HV for each PMT is parameterized, and along with all other characteristics is made available as a database. Quality control procedures are applied (See figures 3-8).

Pmt Test and Characterization Setup

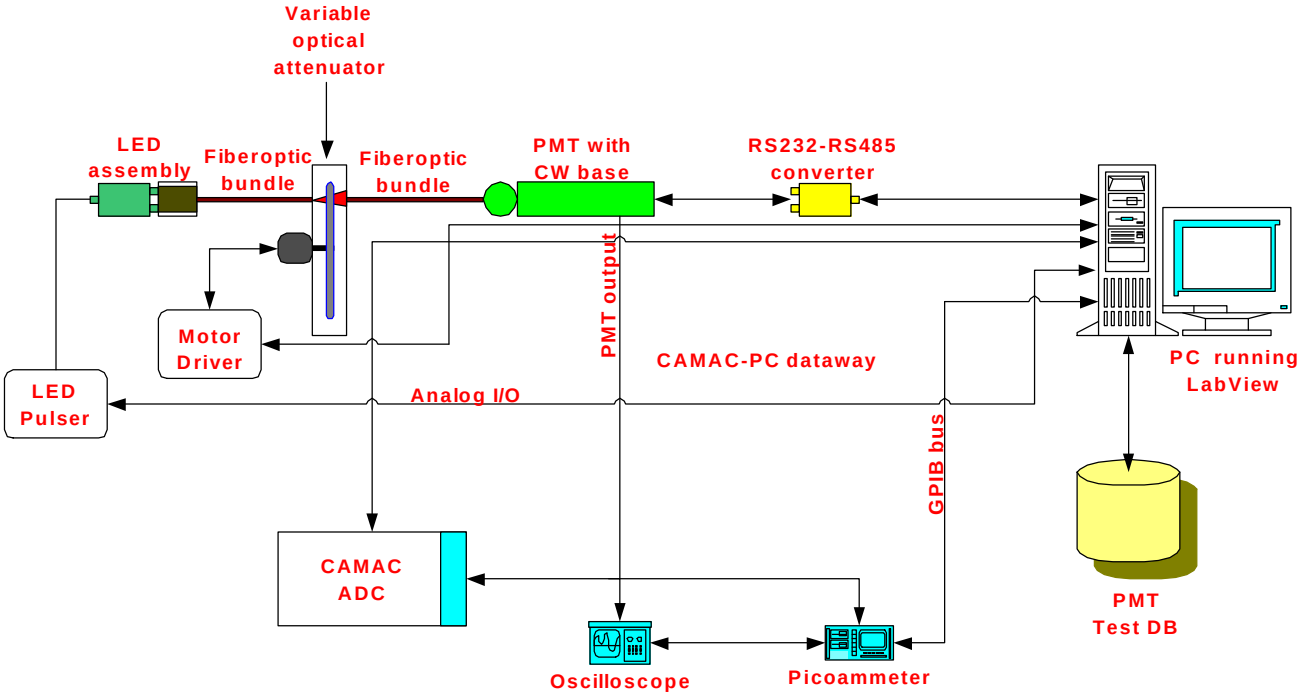

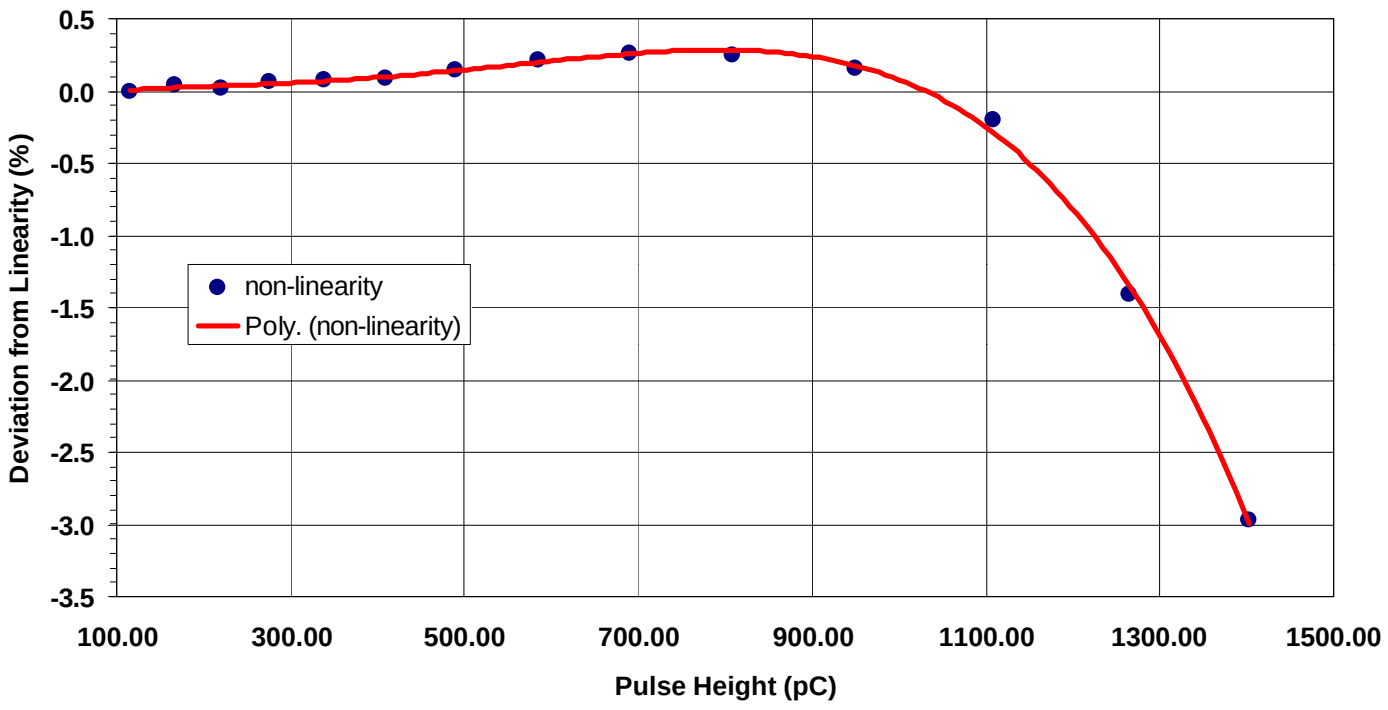
0.5
0.0
-0.5
-1.0
-1.5
-2.0
-2.5
-3.0
-3.5
Deviation from Linearity (%)
non-linearity
Poly. (non-linearity)
100.00
300.00
500.00
700.00
900.00
1100.00
1300.00
1500.00
Pulse Height (pC)

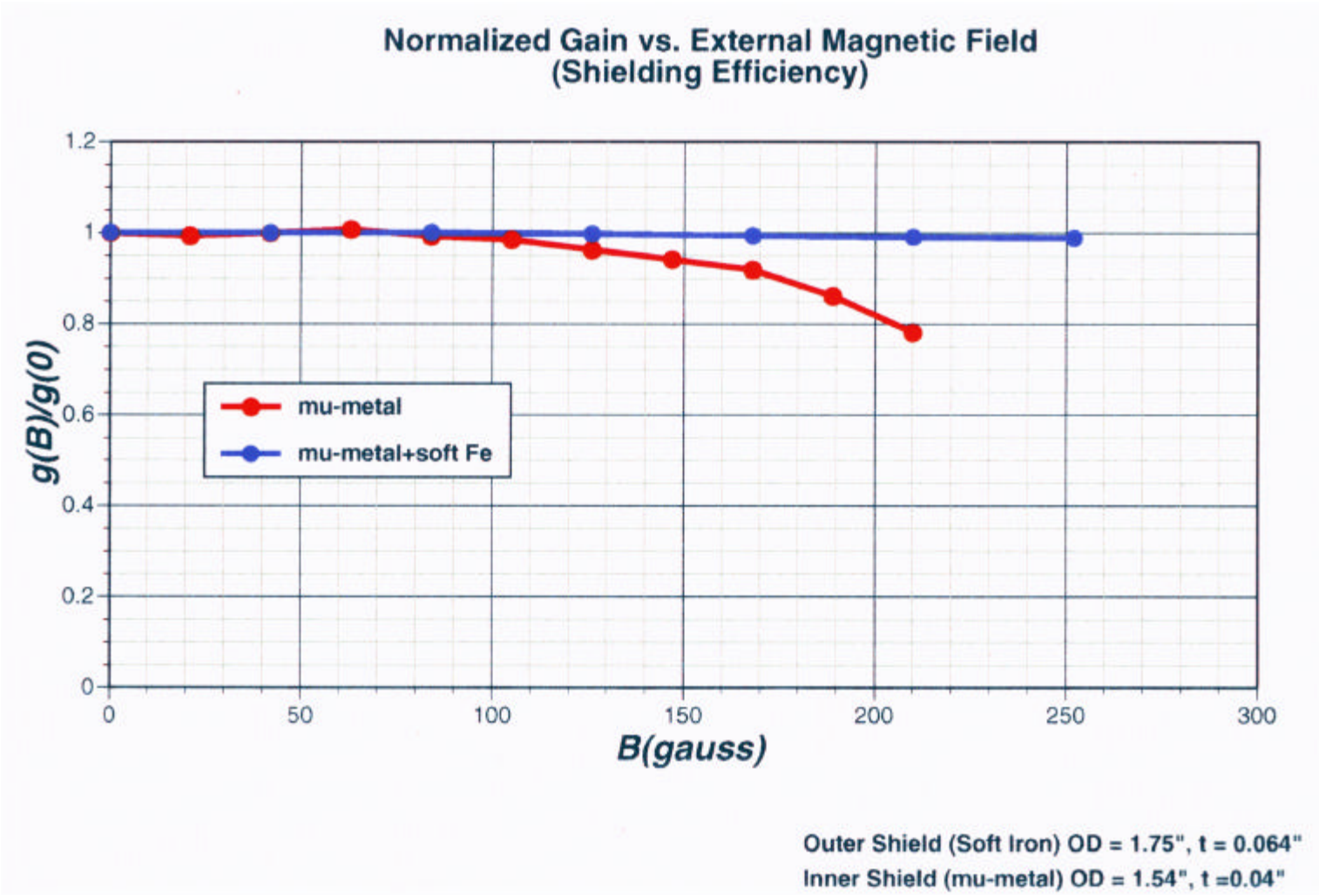
Normalized Gain vs. External Magnetic Field
(Shielding Efficiency)
1.2
1
0.8
0.6
0.4
0.2
0
g(B)/g(0)
mu-metal
mu-metal+soft Fe
0
50
100
150
200
250
300
B(gauss)
Outer Shield (Soft Iron) OD = 1.75", t = 0.064"
Inner Shield (mu-metal) OD = 1.54", t =0.04"

A New PMT HV System

- **A new HV system based on Cokcroft Walton (CW) voltage multiplication scheme has been developed (HV is generated inside the base. Only low voltage DC power is supplied externally).**
- **PMT bases use microcontrollers to control and monitor HV and temperature.**
- **Over 500 CW bases have been produced and tested so far. Production efficiency is 95% and is expected to improve (improvements in stuffing, shipping, and QC ~98-99%). Production rate is 250-300/month.**
- **No HV cables or connectors-safer to use.**
- **Overal system cost is typically ½ that of a conventional HV systems (system includes LabView based control/monitoring system).**

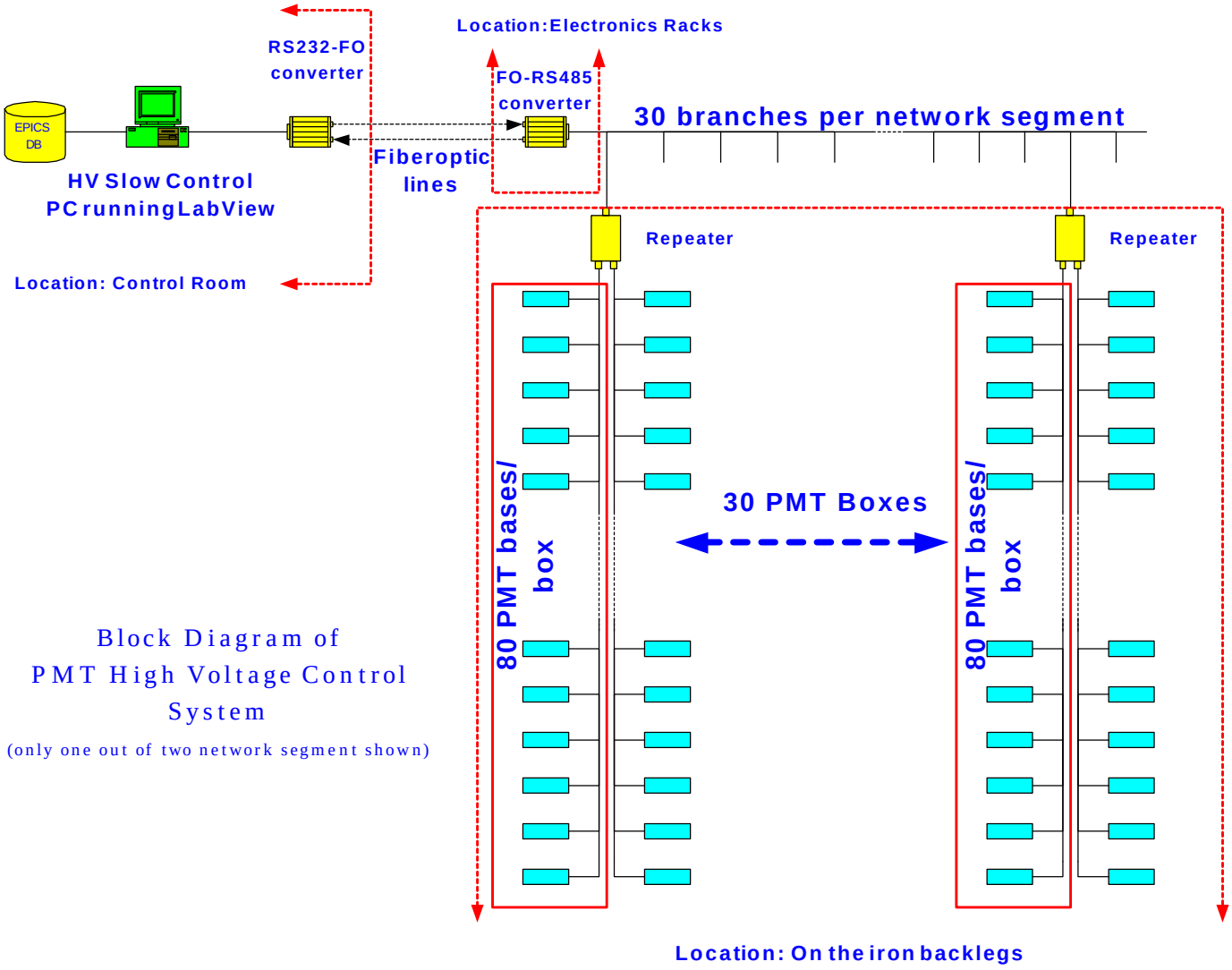

Block Diagram of PMT High Voltage Control System

(only one out of two network segment shown)

CW BASE CHARACTERISTICS.

- **Linearity: better than 0.5%**
- **Long term stability: 0.5 V_{pp} (0.05%) (after 12 hours initial warm-up).**
- **Ripple: 0.2 V_{pp} @ 1 uA load on photocathode.**
- **Noise: same as conventional base (measurements limited by ADC resolution).**
- **HV range: 0 to –1500 volts.**
- **Setting resolution: 0.6 volts.**
- **Each base individually addressable (12 bit address), current and voltage are limited via hardware.**
- **The firmware on each base is programmable for future improvements. The HV division ratio for PMT base may be altered to fit any PMT.**

Comparison of pedestals taken with Conventional base and CW base.

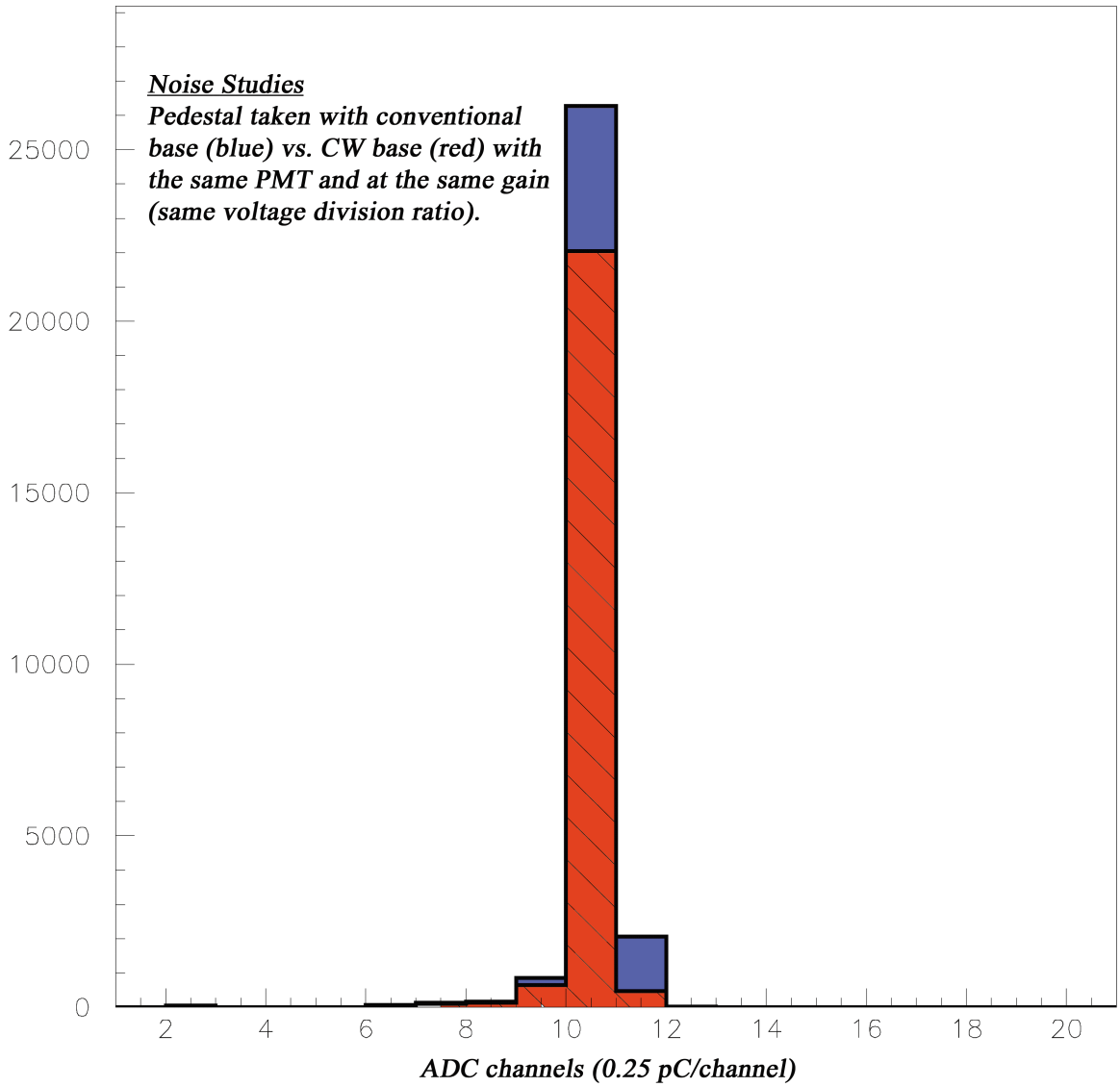

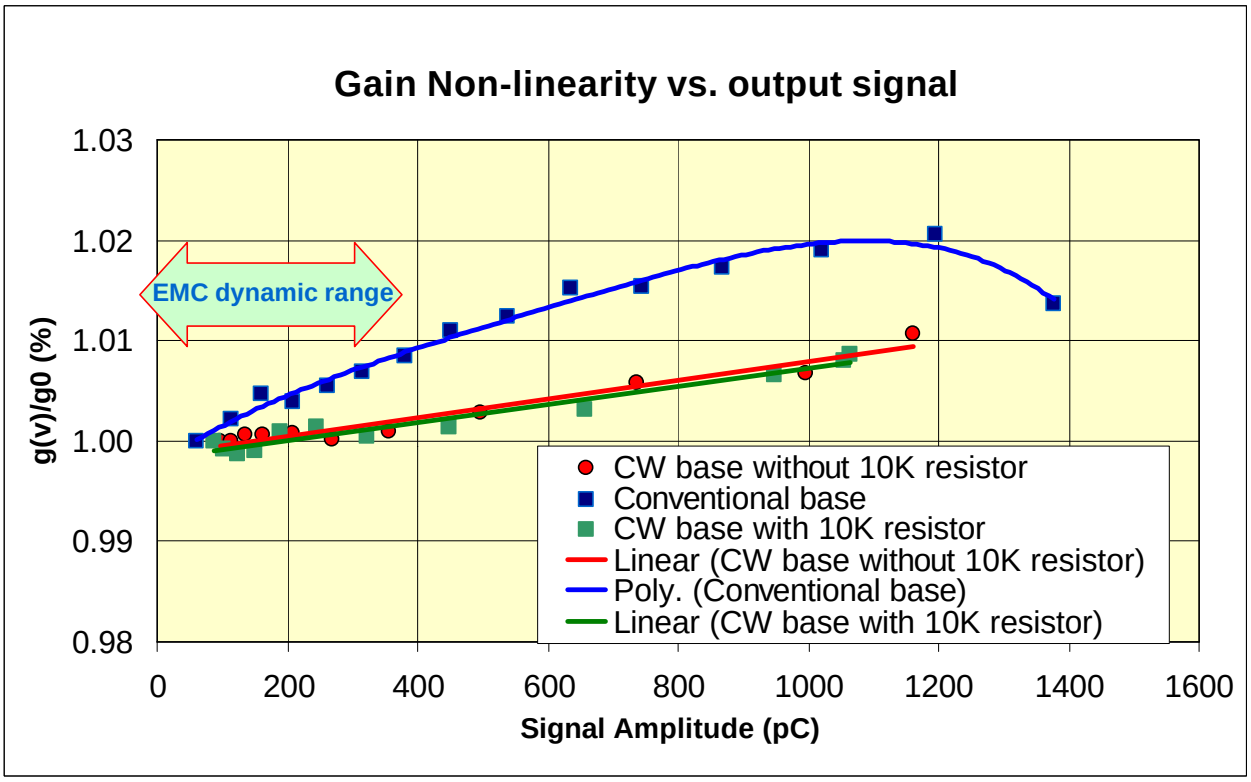
Gain Non-linearity vs. output signal
1.03
1.02
1.01
1.00
0.99
0.98
g(v)/g0 (%)
EMC dynamic range
0
200
400
600
800
1000
1200
1400
1600
Signal Amplitude (pC)
CW base without 10K resistor
Conventional base
CW base with 10K resistor
Linear (CW base without 10K resistor)
Poly. (Conventional base)
Linear (CW base with 10K resistor)

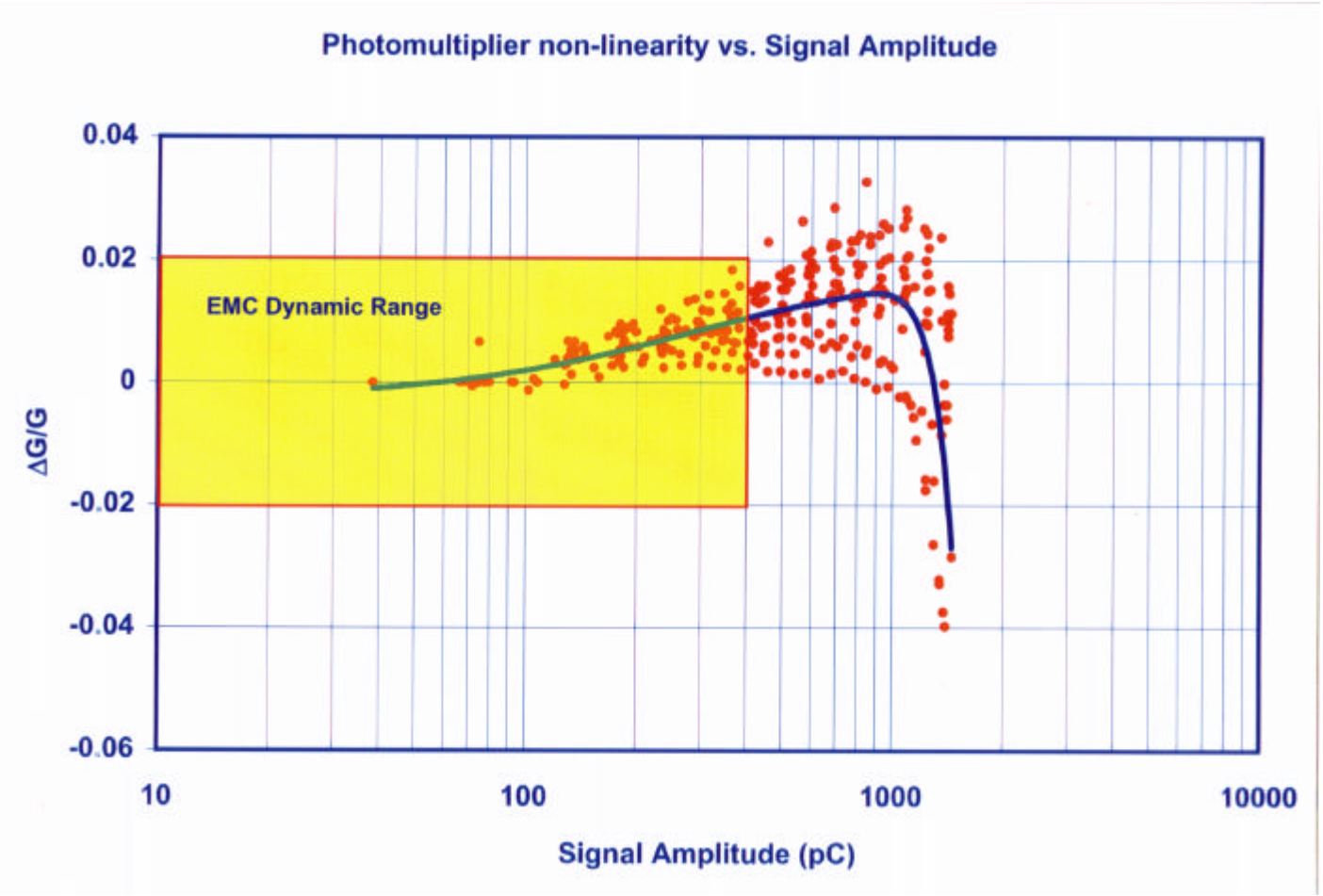
Photomultiplier non-linearity vs. Signal Amplitude
EMC Dynamic Range
0.04
0.02
0
-0.02
-0.04
-0.06
ΔG/G
10
100
1000
10000
Signal Amplitude (pC)

Automated PMT Gain Measurements

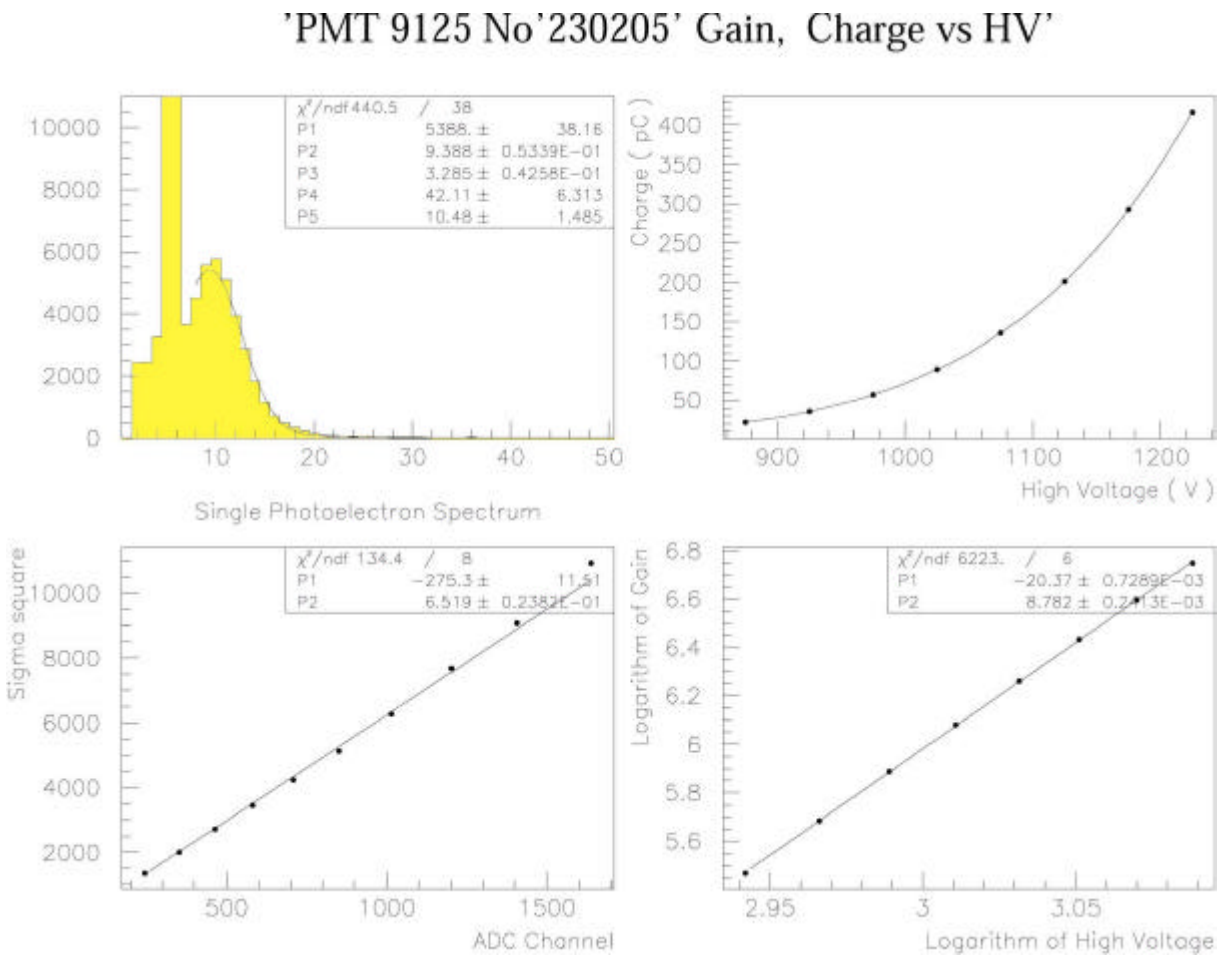

Arrangement of PMTs in STAR EMC boxes

Resources

- Our group has Electronics and Mechanical Design experience.

  Resources available at UCLA:

- Full Machine Shop with several CNCs and Scintillator work experience.

- Electronics Shop with Design and Fabrication capabilities.

- Graduate and Undergraduate student pool.