Drive Beam quadrupoles for the CLIC project: a novel method of fiducialisation and a new micrometric adjustment system

Hélène MAINAUD DURAND, on behalf on CLIC pre-alignment team

IWAA2014
October 13-17, 2014
IHEP, Beijing, China

Agenda

A novel method of fiducialisation & a new micrometric adjustment system

Outline

- Introduction
- A new method of fiducialisation:
  - Introduction: determination of the magnetic axis & fiducialisation
  - New proposal
  - Results
- A 5 DOF micrometric adjustment system:
  - Requirements
  - Description of the solution
  - Process of validation and associated results

Introduction

CLIC project

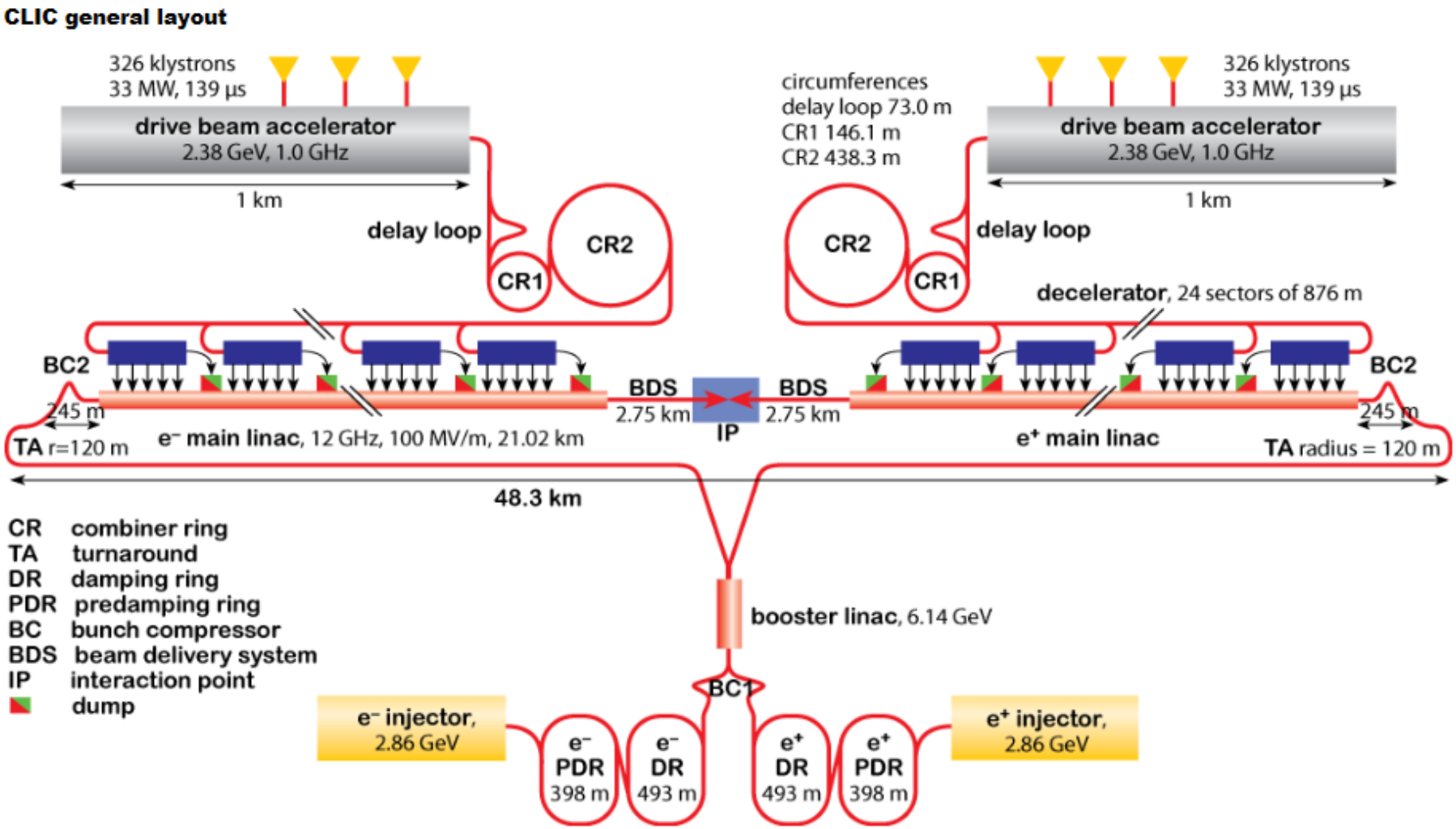

Introduction

CLIC module

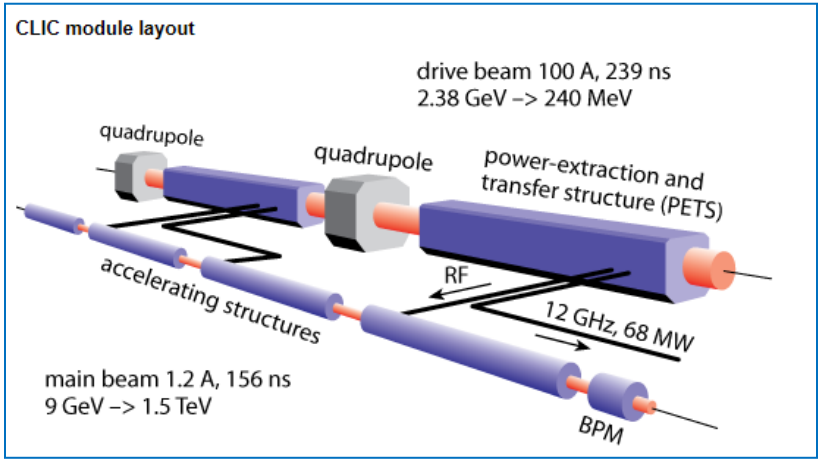

Some data:

- Length of 1 module = 2 m
- 20 000 modules in total
- 2 DB quads per module
- 40 000 DB quads in total!

DB quad pre-alignment

- For a sliding window of 200 m
- Std deviations of magnetic axis of DB quad w.r.t a straight line fit < 20 µm

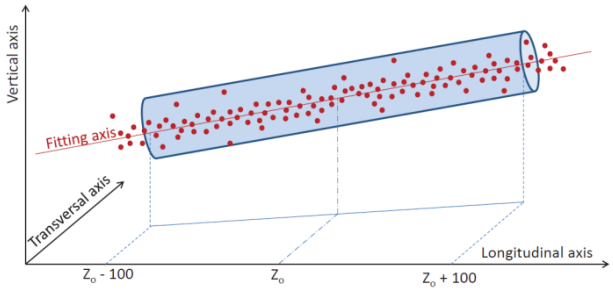

Introduction

CLIC module

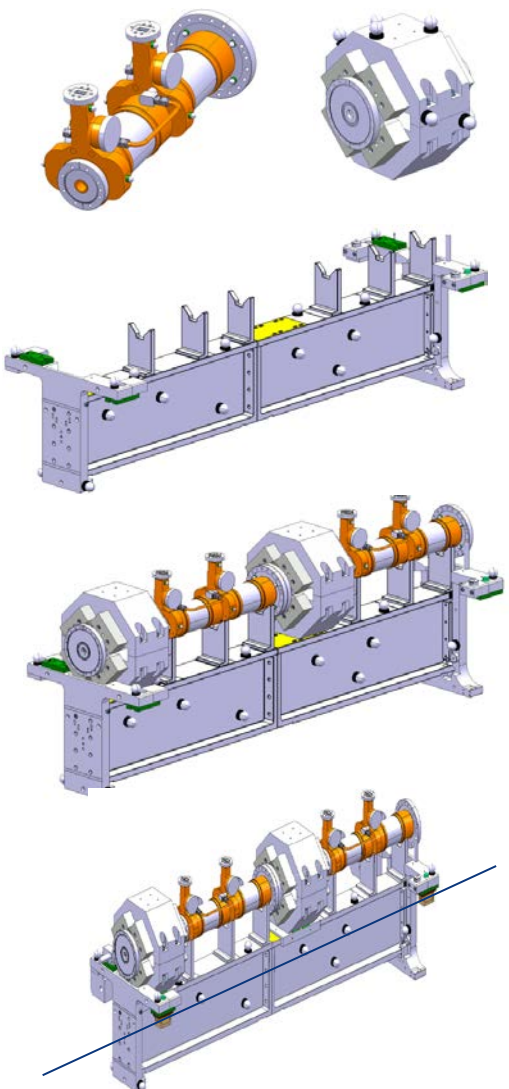

Fiducialisation of components ← new

↓

Fiducialisation of their common support

↓

Alignment of components on support ← new

↓

Whole assembly ready to be installed

Novel method of fiducialisation

Standard process

Fiducialisation:

→ precision within a few µm

→ accuracy estimated at 40 µm

Use of oscillating stretched wire for MB quad

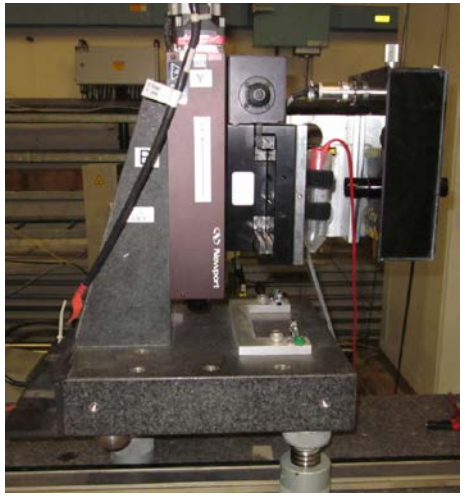

- ✓ Wire centered and aligned to find the position minimizing the oscillation amplitude
- ✓ Wire driven through two ceramic balls in such a way that it is always reinstalled at the same position

Novel method of fiducialisation

Components of novel method

- Determination of the position of wire using cWPS
- Determination of the position of cWPS w.r.t fiducials using a bench
  - The position of the fiducials of the bench w.r.t. kinematic mount of cWPS has been measured within 0.3 µm + 1 ppm (Leitz Infinity CMM)
  - AT 401 perform precise and accurate measurements of the DB quad fiducials w.r.t. bench fiducials

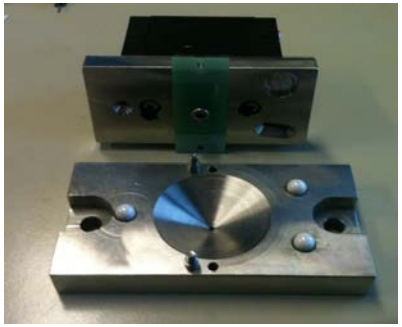

Novel method of fiducialisation

The whole setup

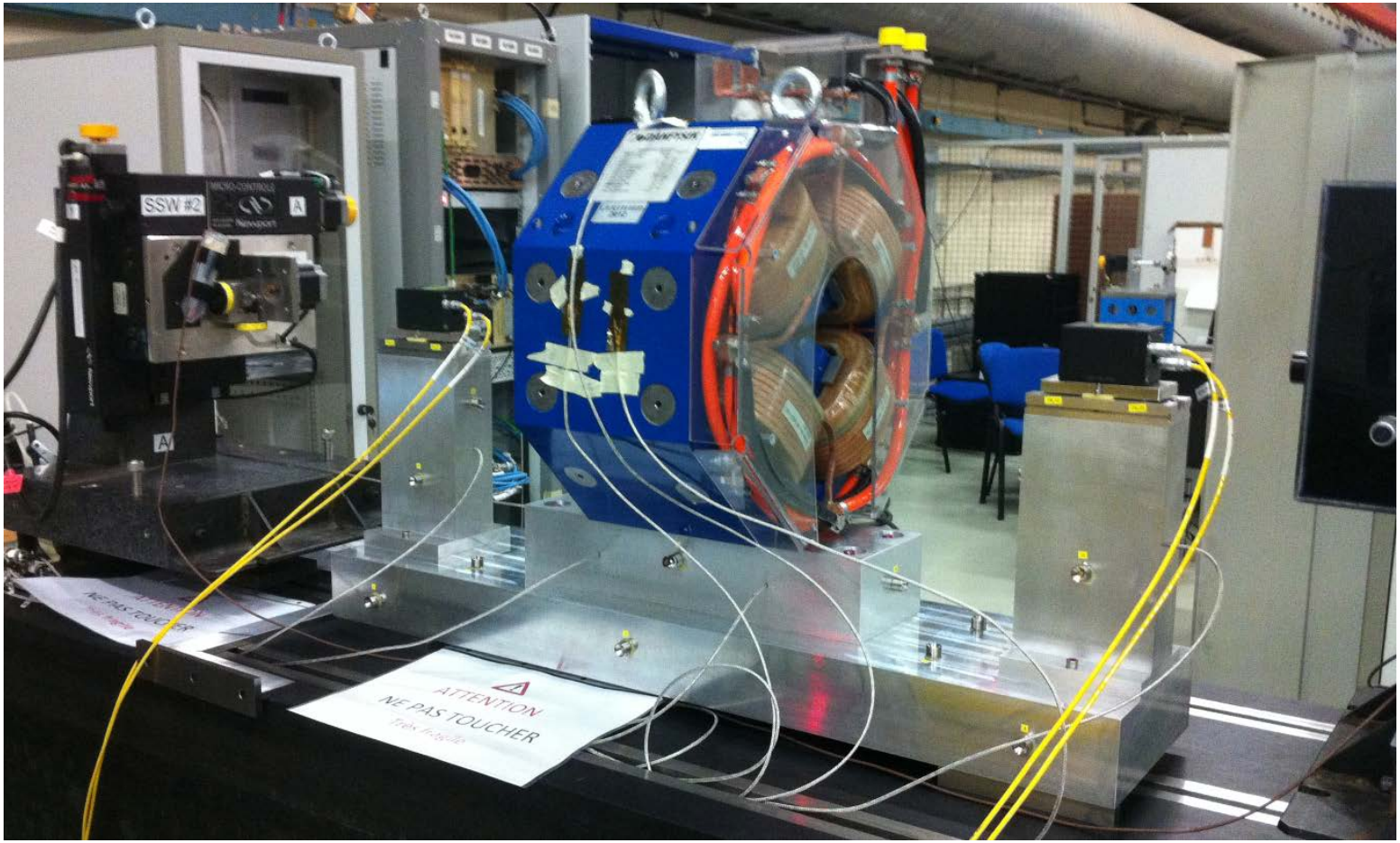

Novel method of fiducialisation

Process of measurements

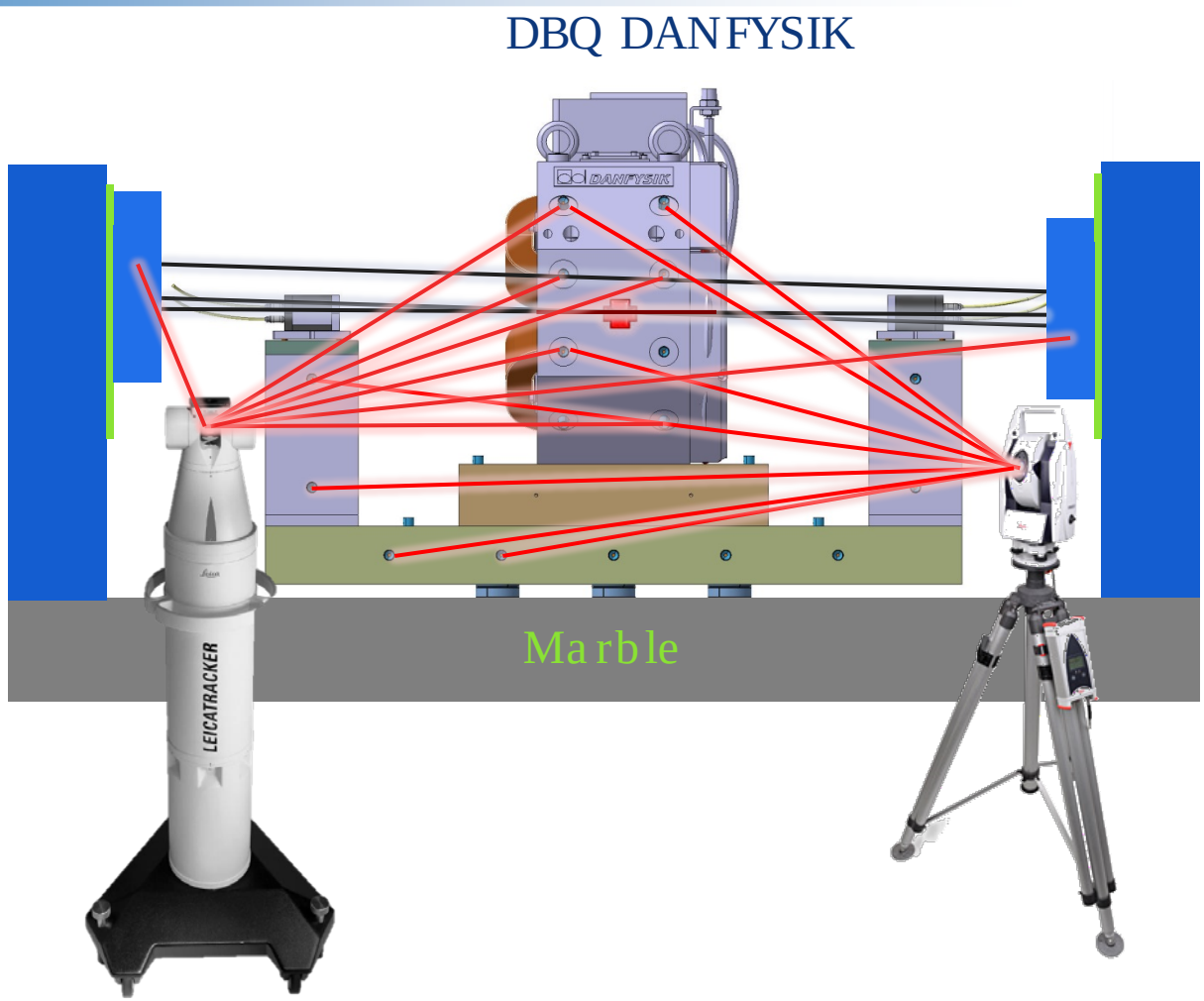

Novel method of fiducialisation

Repeatability of the method

Measurements performed on 3 types of wires (Ø 0.1 mm):

- Cu-Be (2003) 5 sets
- Cu-Be (2013) 4 sets
- Cu-Ni 4 sets

Std dev. of coords	Y (µm)	Z (µm)
Entrance of magnetic axis	4	4
Exit of magnetic axis	4	5

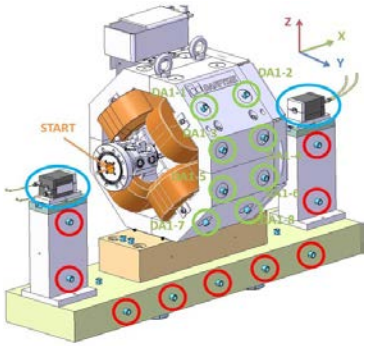

Offsets between methods	Y (µm)	Z (µm)
Entrance of magnetic axis	26	3
Exit of magnetic axis	27	1

Inter-comparison between methods

- Entrance & exit of magnetic axis determined by both methods
- In the standard method, LTD 500 replaced by AT401 measurements
- Systematism of 27 µm in horizontal
  - Due to an error in CMM measurements ?
  - Incoherencies observed by AT401 performed on 0.5 " & 1.5" targets

Novel method of fiducialisation

Inter-comparison (LTD 500)

- Same measurements than before
- Same process of calculations
- But use of LTD 500 instead of AT 401

Offsets between coords	Y (µm)	Z (µm)
Entrance of magnetic axis	2	7
Exit of magnetic axis	2	7

The systematism comes from the AT 401 measurements when performed on two different types of targets 0.5 " and 1.5 "

Position of magnetic axis vs current

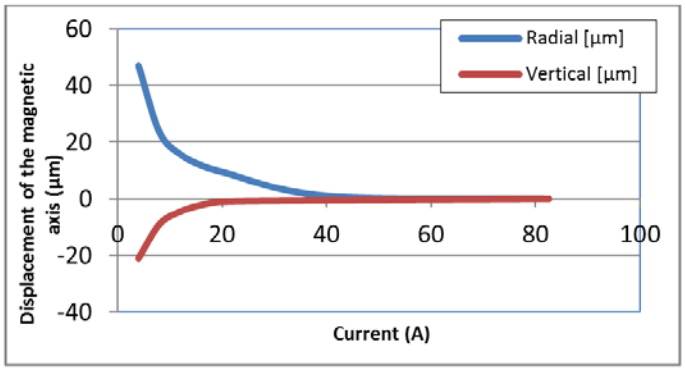

- Impact of the current in the position of the magnetic axis not negligeable,
- Repeatable

Novel method of adjustment

Introduction

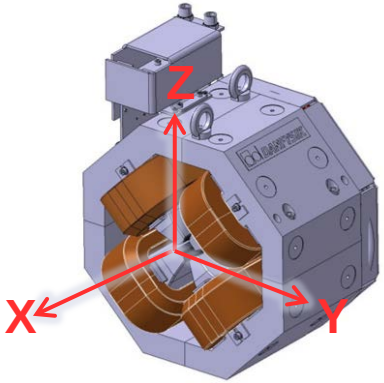

Requirements:

- Adjustment according to 5 DOF (Y, Z translations & 3 rotations)
- Stroke:
  - ™1 mm in Y and Z (X blocked)
  - ™4 mrad in all rotations
- Resolution < 5 µm
- Must fit the available space
- User access only on one side
- Load 170 kg

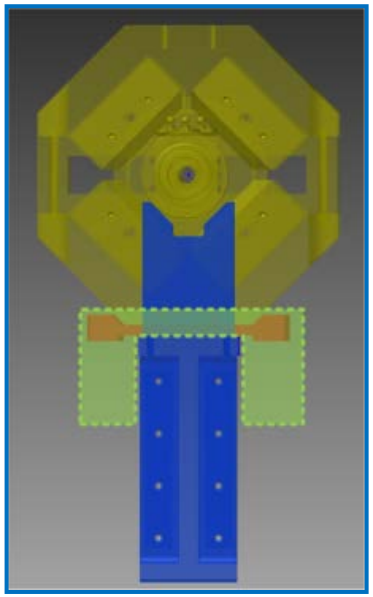

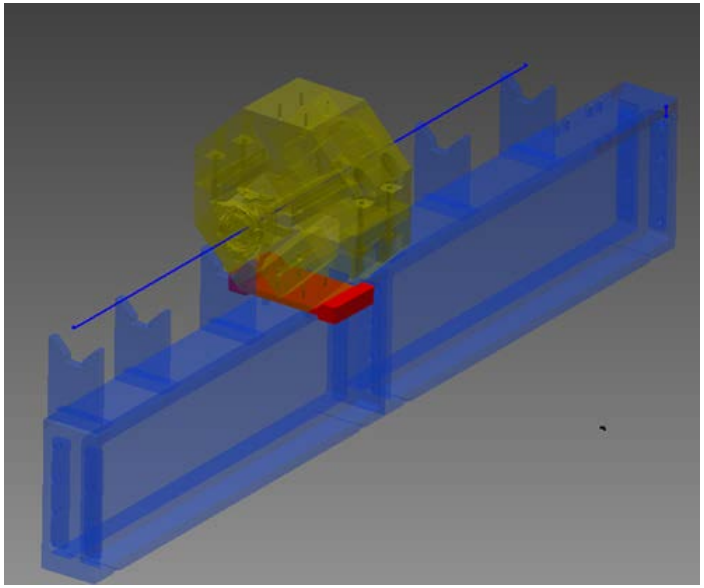

Novel method of adjustment

Solution proposed

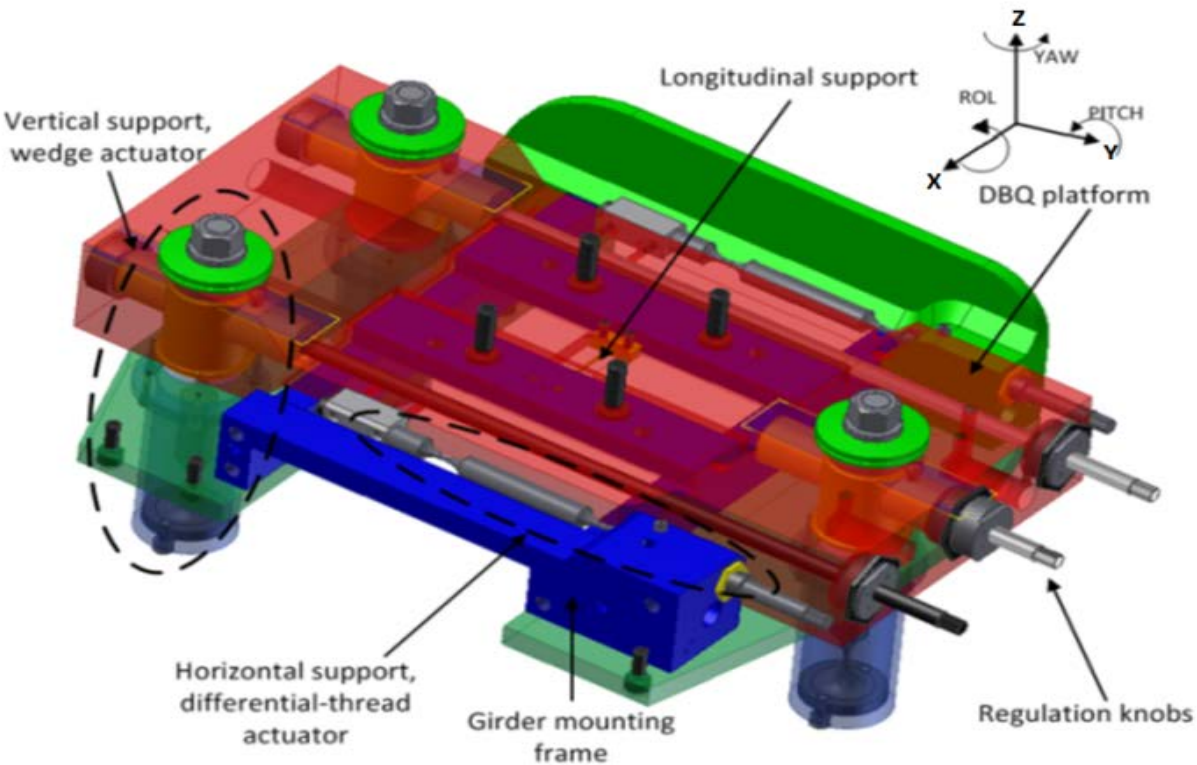

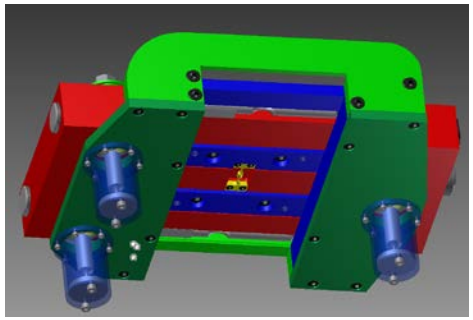

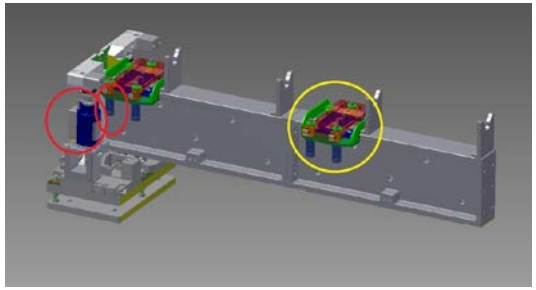

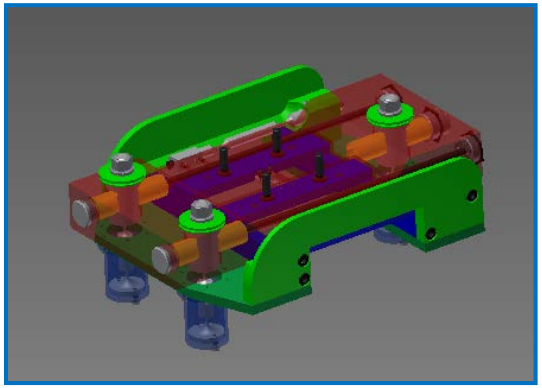

Novel method of adjustment

Solution proposed

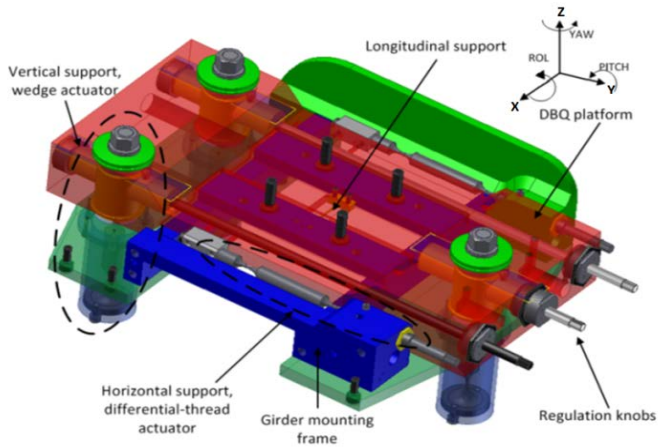

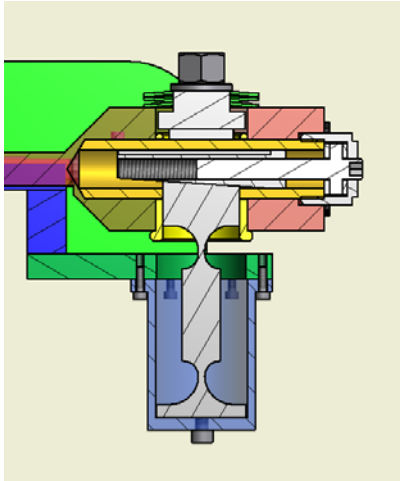

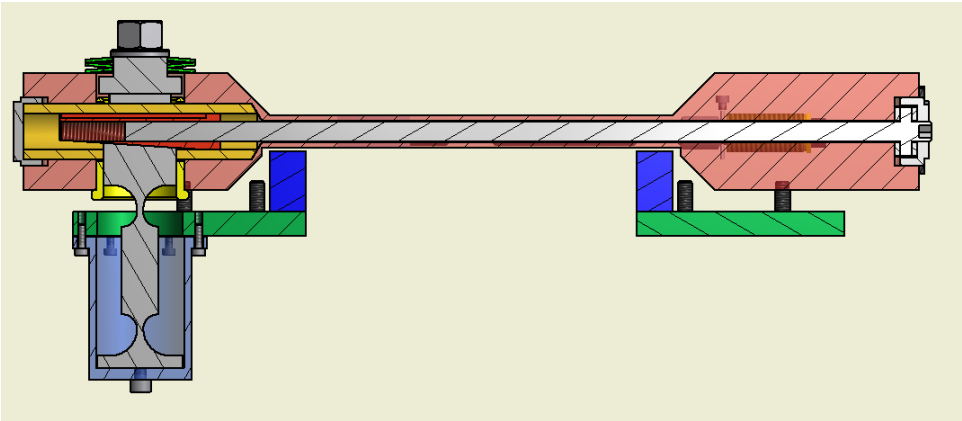

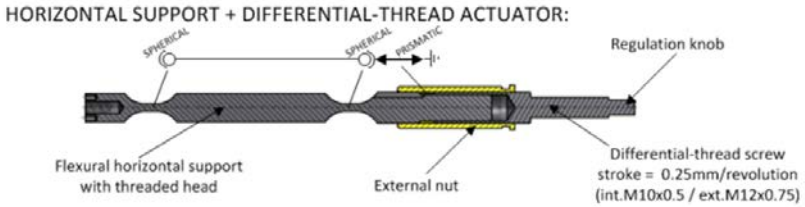

Novel method of adjustment

Strategy of validation

Validation of horizontal & vertical stand-alone units

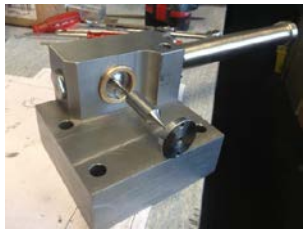

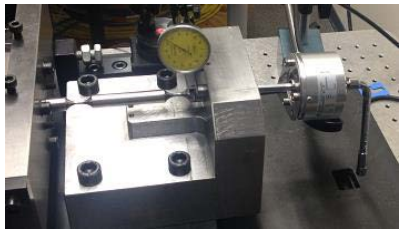

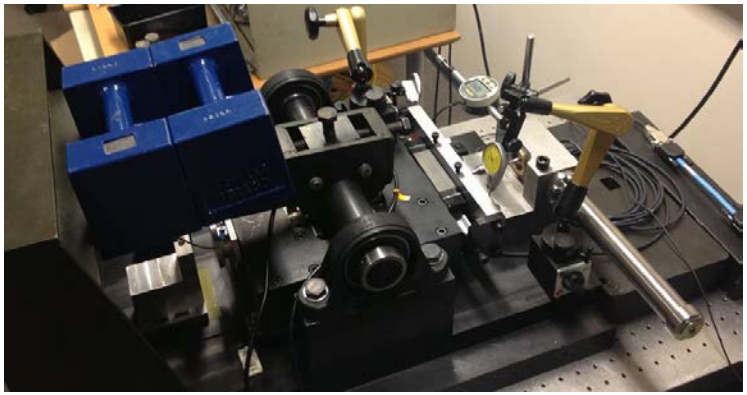

Validation of the prototype

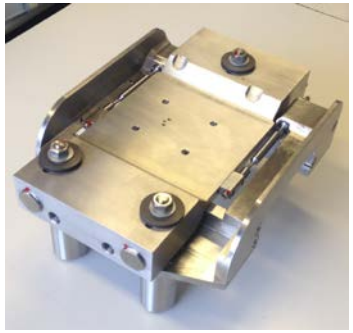

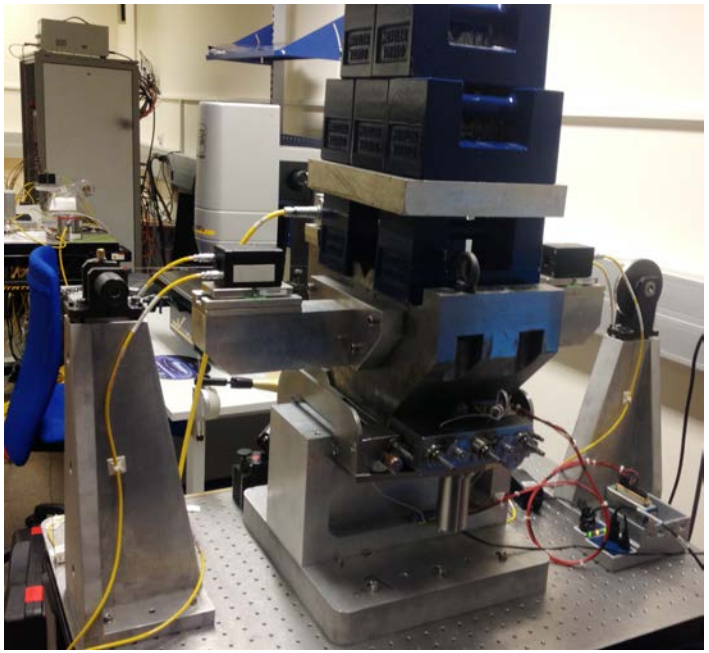

Validation of 2 final series

Novel method of adjustment

Results of prototypes

- Long term stability ok
- No drift or creeping observed
- Resolution of translations < 4 µm
- Resolution of rotations < 40 µrad
- Manual adjustment inferior to 10 ‘
- Second order impact on the vertical axis while adjusting the radial axis and vice versa

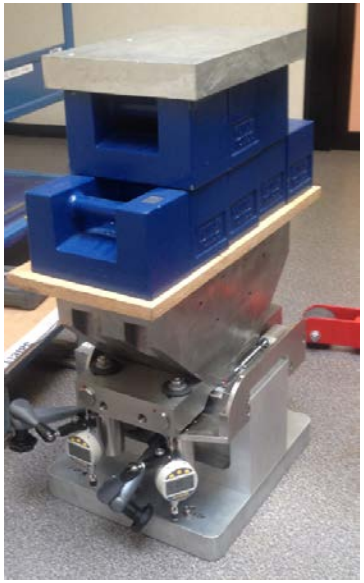

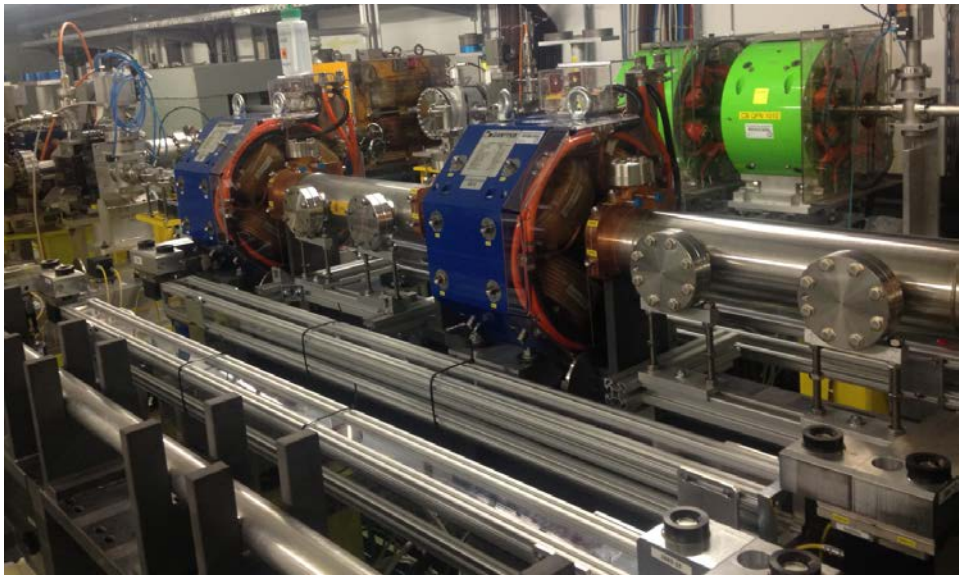

2 series installed successfully in CLEX

Summary

New method of fiducialisation proposed

- Combining AT401, CMM, cWPS measurements
- A budget of error below 5 µm for the fiducialisation process can be considered
- A systematism has appeared during the measurements and seems coming from AT401 coupled with 0.5'' or 1.5''. To be studied

Novel 5DOF micrometric adjustment system

- The system has been successfully installed in CLEX, allowing adjustment of the DBQ according to 5DOF, in less than 10 '.
- Resolutions achieved:
  - Translations below 4 µm
  - Rotations below 40 µrad

Perspectives

Combination of both methods during the fiducialisation process of DB quads

- 2 DB quads installed on the same girder, via the 5 DOF micrometric adjustment system
- Whole assembly installed on a magnetic calibration facility, on a special bench, equipped with additional targets and cWPS interfaces (determined by CMM measurements)
- A wire is stretched to perform the magnetic measurements
- It is not the wire that will be displaced to look for the magnetic axis of the quadrupole, but the quadrupole itself, using the 5 DOF adjustment system
- Once in position, the position of the wire is measured, using a combination of cWPS, AT401, CMM measurements, in the girder referential frame.

This is an extrapolation of the PACMAN project…