The Multi-channel High Precision ATLAS SCT Alignment Monitoring System: A Progress Report

S. M. Gibson, P. A. Coe, J. Cox, M. Dehchar, E. Dobson, D. F. Howell, A. Mitra, and R. B. Nickerson
University of Oxford, Particle Physics, Denys Wilkinson Building, Keble Road, Oxford, OX1 3RH, UK

An interferometer based alignment monitoring system has been developed for the ATLAS inner detector, as previously presented at IWAA. In the past two years several hundred interferometers have been manufactured, tested and installed in the semiconductor tracker (SCT), to form a geodetic grid of length measurements between nodes. Each interferometer is measured to a precision of < 1 μm in a hostile environment using Frequency Scanning Interferometry. This paper reviews the off-detector laser and diagnostic system needed to achieve this precision across all 842 channels simultaneously. We present first results using a two-colour master-oscillator, tapered amplifier system, capable of high power (> 600 mW) delivery to several hundred interferometers. The large frequency tuning range ($\sim$10 THz) of this laser system is key to the improved measurement precision. A multi-channel read-out system capable of simultaneously recording hundreds of picowatt signals has been developed. The use of recently available IR MEMS optical fibre switches to cost effectively increase the power to each grid line is demonstrated. These developments anticipate first measurements of the installed geodetic grids, after the SCT is positioned in the ATLAS underground cavern in early 2007.

1. INTRODUCTION

1.1. ATLAS SCT Alignment

ATLAS is a general purpose particle detector, shown in Figure 1, which is under construction for the Large Hadron Collider at CERN, Geneva. Surrounding the interaction point at the heart of ATLAS is the SemiConductor Tracker [1]. The SCT barrel consists of four concentric carbon fibre cylinders tiled with silicon strip double-layered 40 mrad-stereo angle 12 cm by 6 cm silicon strip detectors. The largest layer of silicon detector modules is shown in Figure 2, during assembly. At both ends of the barrel the SCT consists of nine discs tiled with silicon modules, organised such that tracks within the acceptance of the SCT will traverse at least four layers. The overall dimensions of the SCT are approximately 1 m diameter by 6 m long. The intrinsic resolution of the strips is around 18 μm so to ensure that the tracking performance is not significantly degraded by uncertainty in the strip location, the requirement is imposed that the position in space of each strip is know to 12 μm in RΦ. The challenge of aligning the large central tracking detector of the ATLAS experiment has stimulated the development of a versatile, precise, multiple distance measurement technique called Frequency Scanning Interferometry [2, 3, 4].

1.2. FSI Geodetic Grids

Conventional survey techniques are not practicable inside the operational particle tracker of ATLAS, due to the inaccessible, confined spaces and high radiation levels. To overcome these challenges a novel alignment system has been developed that will remotely measure the tracker shape on a time scale of a few minutes [2, 3]. The *on-detector* alignment system consists of a geodetic grid of length measurements between nodes attached to the ATLAS SCT. Combining these measurements will allow the node positions to be reconstructed. These node positions will be interpolated to determine the co-ordinates of the silicon detector modules. The 842 lengths in the geodetic grid will be measured simultaneously, to a precision of < 1 μm using Frequency Scanning Interferometry.

The FSI technology developed to provide the distance measurements for the network may be considered as a miniaturised form of commercially available laser tracker, used in absolute distance measurement mode. In this analogy, the beam delivery head of the laser tracker has been reduced in size (to 2.5x5x9mm) and in cost so that it is feasible to permanently install 842 such heads in the network, one head for each distance measurement. The laser

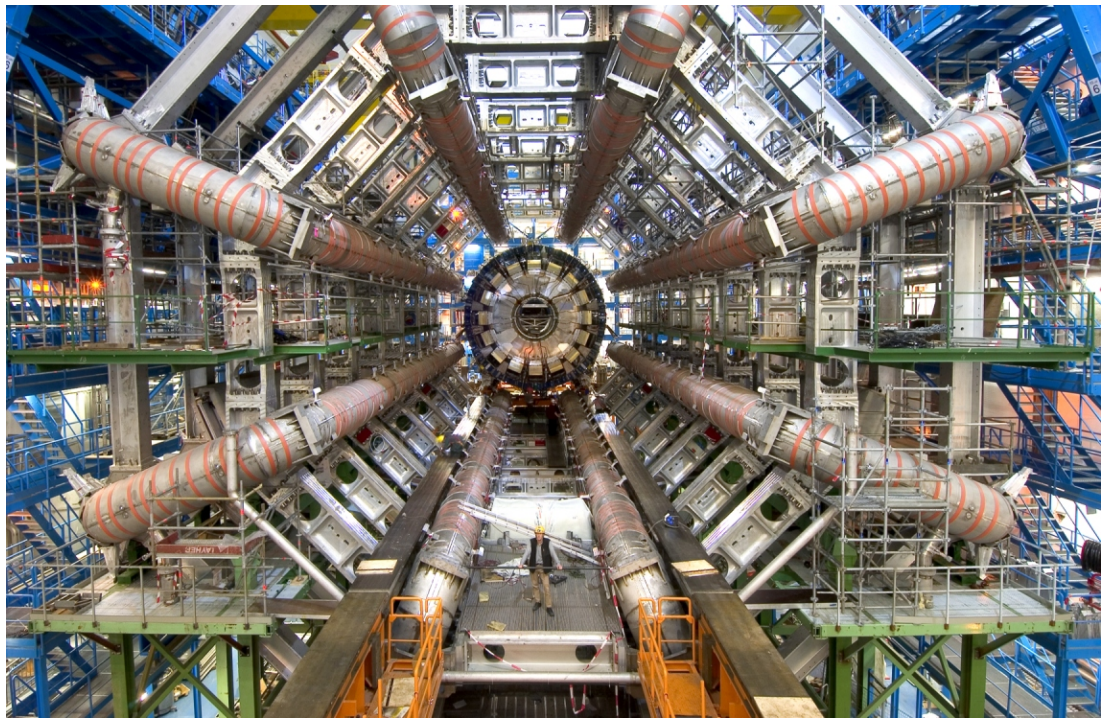

Figure 1: An axial view of the ATLAS detector, during assembly in November 2005. The structure of the toroidal magnets can be seen surrounding interaction point 1 of the LHC where protons beams will first collide in 2007.

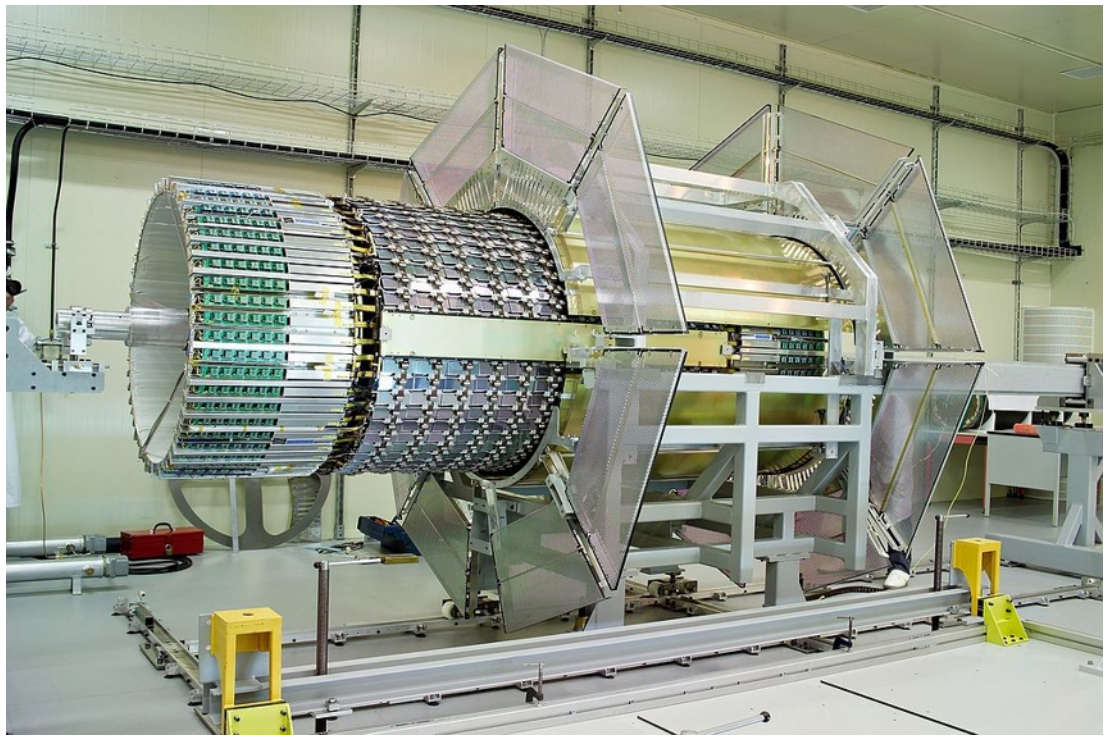

Figure 2: The SemiConductor Tracker lies at the heart of the ATLAS detector shown in Figure 1. The SCT Barrel is a Ø1 m by 1.5 m long particle detector, pictured here during insertion of the largest cylindrical layer of silicon-strip detector modules into the outer thermal enclosure.

heads are operated remotely via optical fibres from a single laser and diagnostic system which can be housed away from the inaccessible, confined, radiation area. All laser heads can be simultaneously and repeatedly measured to a precision of < 1 μm, allowing changes in the network shape to be rapidly monitored.

Further details of the alignment system concept, demonstration tests and the on-detector system can be found in previous IWAA proceedings [4, 5, 6] and elsewhere [7, 8, 9]. The on-detector FSI geodetic grid installation was completed in September 2005. A portion of the installed grid is shown in Figure 3. This paper focuses on the remaining *off-detector* FSI technology which makes the technique possible. The off-detector technology consists of the laser system, the frequency measurement equipment, the optical fibres conveying light to and from the on-detector grids, and the optical sensors (APDs) which register the interferometer signals. An overview of the system is provided in Section 2 and details of a recently purchased high power laser system and preliminary results are given in Section 3. The system developed to read-out hundreds of pico-watt signals is presented in Section 4 and the world's first FSI measurements using MEMs optical fibre switches are demonstrated in Section 5.

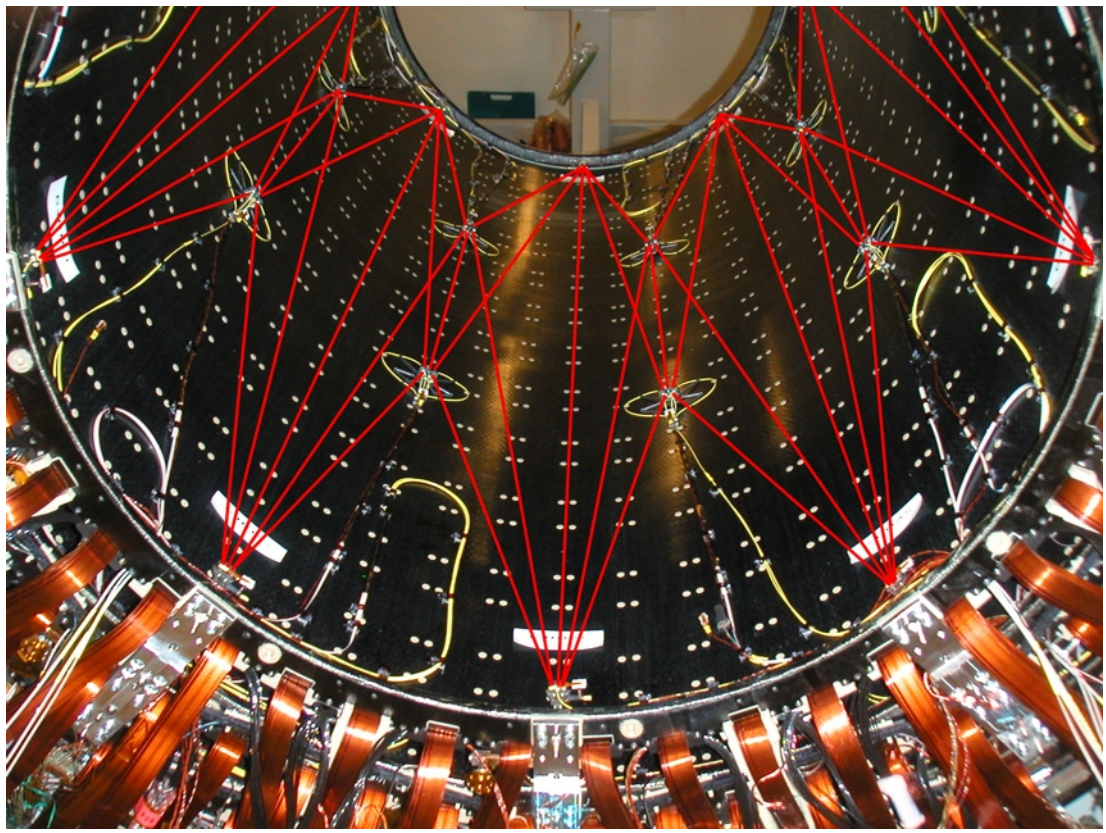

Figure 3: A geodetic grid of distance measurements is formed between nodes attached to the inner surface of the support structure of the SCT barrel, shown in Figure 2. Only a small portion of the total SCT grid of 842 interferometers is shown. Each red line represents an interferometric distance measurement precise to < 1 μm.

2. FREQUENCY SCANNING INTERFEROMETRY

2.1. Technique and System Overview

Frequency Scanning Interferometry is a technique for multiple, simultaneous and precise distance measurements in a hostile environment [2, 3, 4, 8, 9]. A narrow line-width tunable laser simultaneously illuminates multiple interferometers to be measured and a reference interferometer. As the optical frequency is scanned, a phase shift is

induced in all interferometers, at a rate that is proportional to the length of each interferometer. The phase shifts in the interferometers are compared to determine the ratio of interferometer lengths to < 1 ppm.

The FSI system is arranged as in Figure 4. The various components of the FSI system are located in three main areas: the laser room in a surface building, an alignment rack in an underground counting room, and within the ATLAS SCT. The components are connected via optical fibres, so that the on-detector Grid Line Interferometers are illuminated and read-out remotely. The lasers provide the high spectral characteristic light source to illuminate the rest of the system, as detailed in Section 3. The diagnostic and evacuated reference interferometry system system provide the essential frequency measurement equipment. All measured interferometers are compared to the Reference Interferometer which defines the scale of the measurements. The stability of this length is critical to the long term repeatability of the FSI measurements. The RI has a thermally compensating invar design and is housed inside an evacuated chamber in a thermally stabilised environment. Light from the lasers is conveyed via a 250 m delivery fibre to the underground cavern where the light is split in fibre to illuminate the 842 interferometers on the ATLAS SCT. The interferometers are read out by an array of avalanche photodiodes which are sensitive to picowatt return signals.

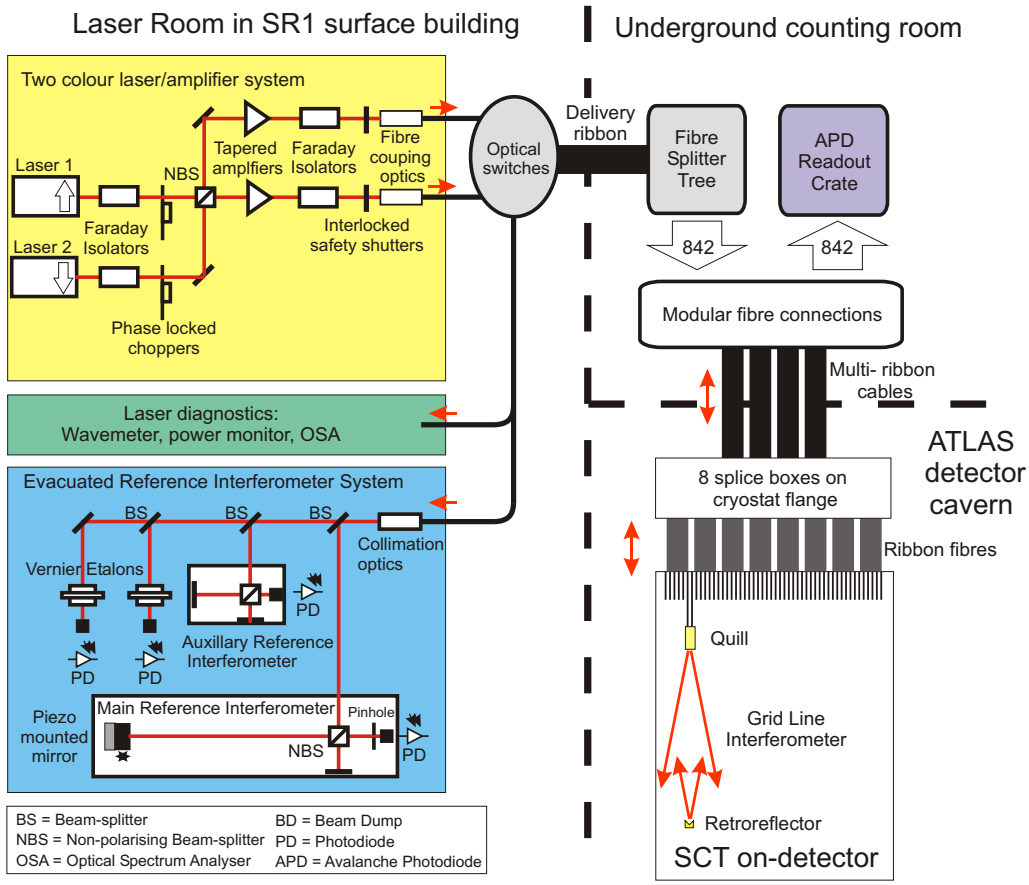

Figure 4: Layout of the FSI system.

2.2. Grid Line Interferometers

The Grid Line Interferometers are fibre-coupled and use retro-reflectors so they can operate in remotely inside ATLAS without the need for adjustment. The small, low mass components tolerate misalignment by using a divergent beam from a radiation-hard single mode fibre. As a trade off the return signal is only a few pW per mW of input power. Further details can be found in [6].

3. TWO COLOUR LASER/AMPLIFIER SYSTEM

3.1. Basic Requirements

Due to the constraints of the grid line interferometer design only 10^{-9} of the light delivered will be returned to the photo-detector. Therefore a powerful (> 500 mW) light source is needed to illuminate the hundreds of interferometers in the system, whilst maintaining the stringent light characteristics required for FSI. The requirement is a narrow line-width (< 1 MHz) source with a large (> 60 GHz) mode-hop free fine frequency tuning range and a wide coarse tuning range of > 16 nm, within the wavelengths compatible with the Silicon-APD read-out system and the purchased optical fibre (800-850 nm). Two lasers are required, which are tuned in opposite directions in the FSI measurement technique, to compensate for the important interferometer systematic of thermal drift [3].

3.2. Solution

When the FSI system was first proposed, Ti:Sapphire ring cavity lasers, pumped by a pair of intra-cavity, frequency doubled Nd:YVO_4 solid state lasers, were originally envisaged to meet the above requirements [2]. However recent developments in semiconductor diode tapered amplifier technology have provided a simpler, more cost effective solution. The laser system is shown in Figure 5 and consists of two semiconductor diode master-oscillators (MOs)

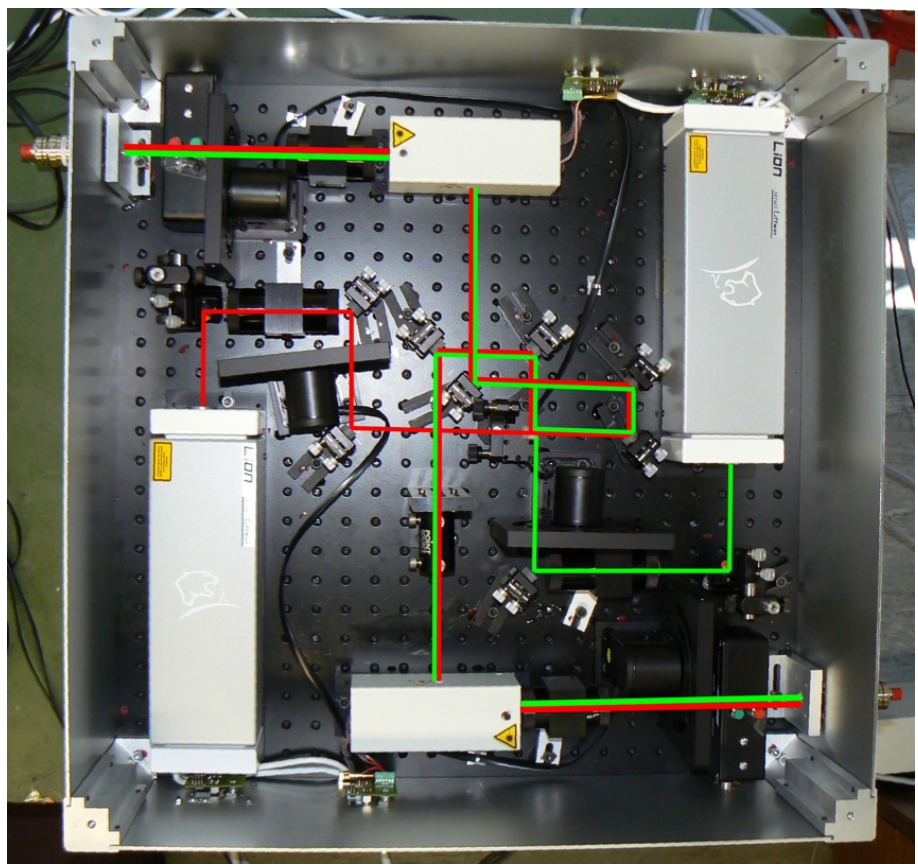

Figure 5: An internal view of the FSI two colour laser/amplifier system, with the safety cover removed. Two Master Oscillators are shown in the bottom left and top right of the photograph. Each generate > 80 mW laser light, typically of different optical frequencies. Mirrors steer the beams into a beam-splitter, which divides the light to seed two tapered amplifiers (hidden under the white shrouds) that boost the power to > 500 mW prior to fibre coupling (> 300 mW in each fibre). Phase locked choppers ensure only one laser illuminates both amplifiers at any time. The system will illuminate 842 fibre coupled interferometers.

which seed two tapered amplifiers. The MOs are each narrow line-width < 1 MHz tunable sources delivering > 80 mW between 825-845 nm, which meet the characteristics required of the FSI source. The light is then amplified to > 500 mW prior to the fibre coupling, to provide sufficient power (> 300 mW in each fibre) for the system.

3.3. Preliminary Performance

The laser system has been integrated with existing diagnostic tools to evaluate the system performance. Initial studies show that the mode-hop free tuning range and delivered power exceed the specifications at most wavelengths accessible by coarse tuning. To check the specification, a diagnostic reference interferometer and a 10 GHz Fabry-Pérot etalon were simultaneously illuminated by the laser as the optical frequency was scanned. The interference fringes generated in the reference interferometer were continuous for 15 etalon peaks, as in Figure 6. Thus a mode-hop free tuning range of > 140 GHz has been achieved, exceeding the specified 60 GHz.

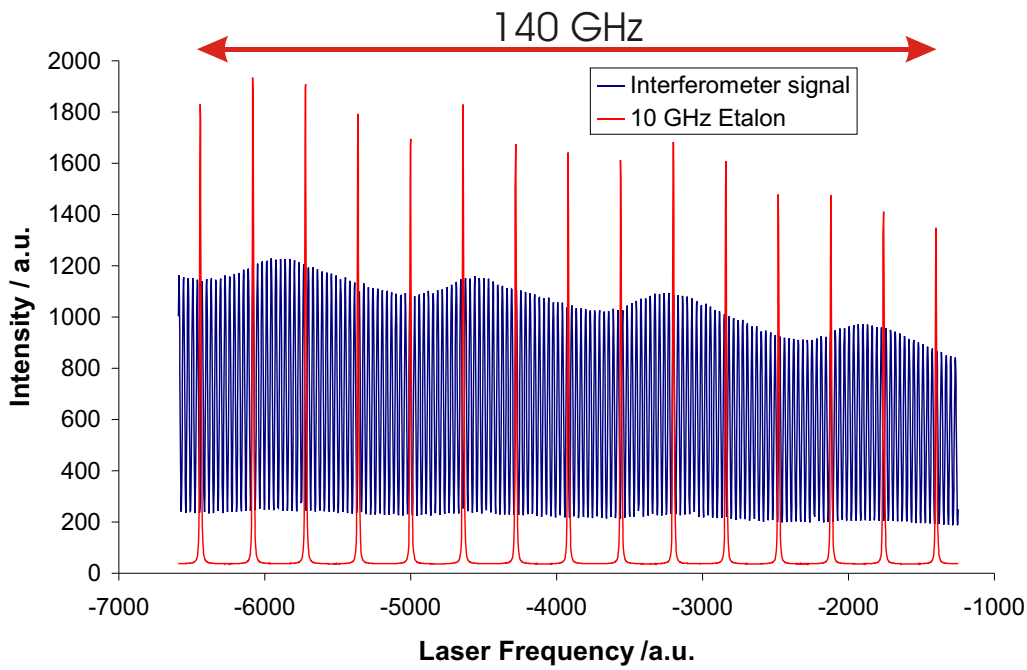

Figure 6: The laser provides > 140 GHz mode-hop free frequency tuning, which exceeds the 60 GHz specification.

The length of the interferometer can be estimated from just one fine tuning subscan of around 100 GHz with one laser. However, changes in interferometer length which occur during a measurement is the dominant source of error in a single laser system [3]. A change in optical path length during a measurement results in an additional phase change which is not the result of the frequency scan but rather a Michelson fringe. Very small changes in path length (a few nm in a metre) produce unacceptably large errors in the length measurement. To remove this effect, a two laser system was invented for use in the SCT system. The two lasers are tuned in opposite directions and alternately chopped into the RI and GLIs at a high rate. The phase shift caused by the path length change is the same for the two lasers, but in opposite directions for the tuning. The difference signal cancels the Michelson phase shift and preserves that from the FSI.

The remaining error in the phase measurement is minimised by rapid scans and by scanning over a large frequency range. Tuning over a long range can result in mode-hops in the lasers and in addition for GLIs embedded in the detector spurious reflections make it impossible to guarantee fringe integrity at all frequencies. The method developed to make a long scan, is to acquire data over several short intervals of continuous laser fine tuning, called sub-scans, separated by large intervals of rapid laser coarse tuning. Using the number of complete 2π phase cycles

in the coarse scan, the phase information from one subscan can be linked by extrapolation to the phase information in the subsequent sub-scan. This results in a large effective tuning range which is robust against mode-hops and localised GLI fringe loss. The details of obtaining precise length measurements using the FSI technique are discussed elsewhere [3, 9].

In the first subscan linking tests with the new laser system, two fine tuning subscans were recorded interspersed by a coarse tuning wavelength change of $\Delta\lambda = 2$ nm. The interferometer length was calculated for each individual subscan and by combining the phase information through linking. using this method, the diagnostic reference interferometer was repeated measured as plotted in Figure 7. The relatively large spread in the measured length for the individual subscans is clearly improved by linking the phase information to give to a length measurement precision of $\sigma = 96$ nm. In future work the measurement precision will be further improved by making multiple subscans over a wider coarse tuning range of up to $\Delta\lambda = 20$ nm.

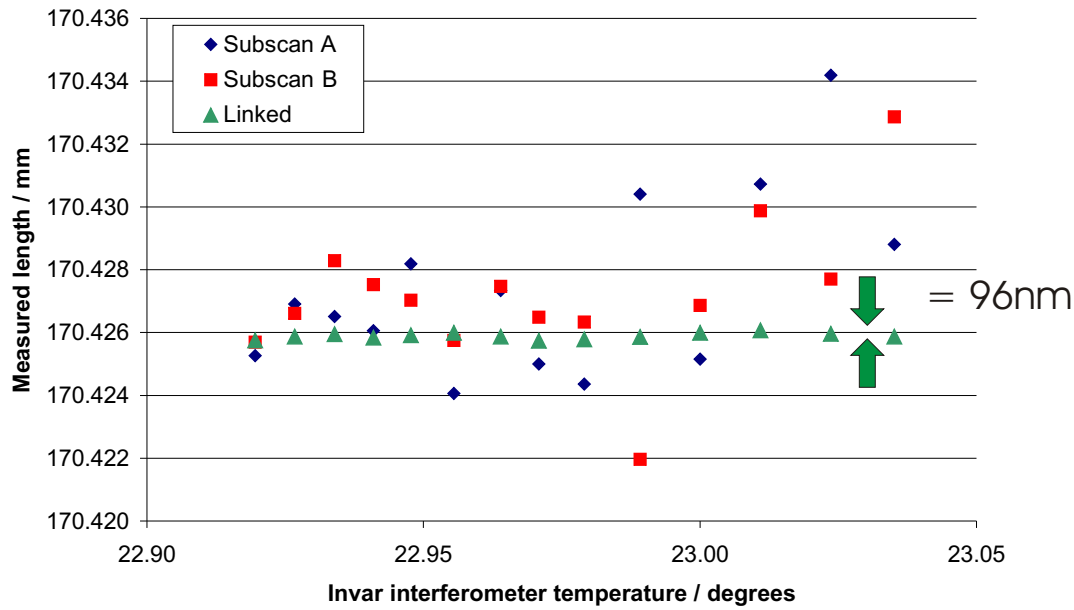

Figure 7: By extrapolating the phase information from a fine frequency tuning subscan at ~ 835 nm to another subscan at ~ 837 nm, the length measurement precision was improved to $\sigma = 96$ nm for the diagnostic reference interferometer.

4. MULTI-CHANNEL READ-OUT SYSTEM

It is not necessary to measure the phase directly in each Grid Line Interferometer to measure lengths with FSI. Instead, the phase shift in each GLIs is determined by numerical analysis of the sampled fringe intensity recorded at a photo-detector and the phase measured in a thermally stabilised reference interferometer. This technique greatly reduces the complexity and cost of the GLIs and eliminates the need for polarization maintaining fibre. Due to the constraints of the GLI design described above only a few pW of power will be reach the photo-detectors. The requirement on the read-out system is therefore to simultaneously record pW dual laser fringe signals from 842 fibre-coupled interferometers.

A multi-channel read-out system has been developed that uses sensitive Avalanche Photo-Diodes. These low cost semiconductor devices operate in a similar manner to normal silicon photodiodes with a large reverse bias. The resulting field gradient accelerates the photo-generated electrons which impact ionise extra electrons, creating an avalanche. The gain of the APD is controlled by the reverse bias. Unfortunately, this avalanche process also contributes to the noise. As it is a stochastic process there is a variance associated with the gain and this enhances

the noise above the simple photon counting shot noise. The readout circuit for the APD consists of a low noise transimpedance amplifier buffered by a non-inverting voltage amplifier. The design and evaluation of a low noise APD amplifier is detailed elsewhere [10].

The read-out system consists of a series of identical cards in a 9U VME crate; each card has 32 APD channels. Four APDs with associated amplifier are mounted on daughter boards, eight of which are attached to a 9U VME card, as shown in Figure 8. The amplified signal from an APD is integrated and digitised with 16 bit precision, then

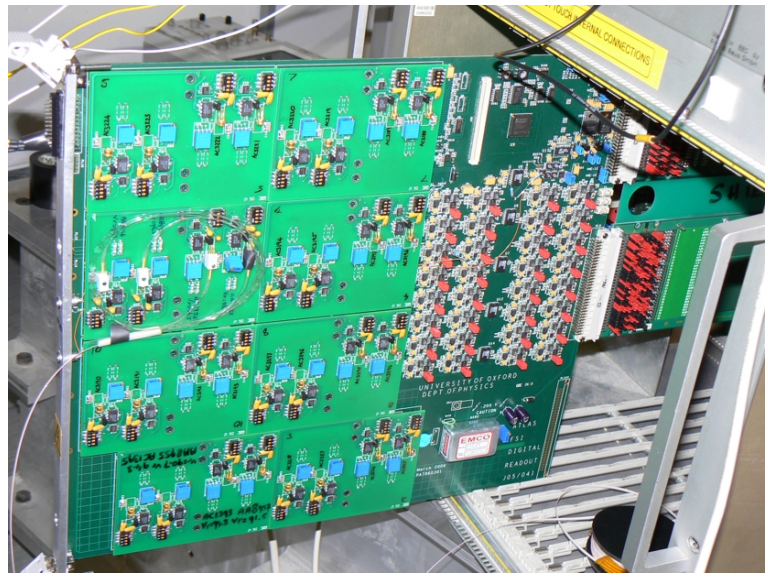

Figure 8: One of the 16 FSI Read Out Cards (FROCs), which can each record 64 dual laser interferometer signals.

buffered by on board RAM. To reduce the cost of the read-out system two interferometer signals will be recorded in sequence at one read-out channel. The relevant two GLIs are alternately illuminated in a timing sequence driven by optical fibre switches, so that the two signals reach the APD separately in alternate time slots. Each GLI signal has two interference fringe patterns corresponding to the two different lasers, thus four sinusoidal fringe patterns are recorded simultaneously at one APD, as shown in Figure 9. The noise is less than 0.1 pW of optical return power. Approximately 200 MBytes of data are recorded per measurement of the 842 interferometers and the data are uploaded via the VME backplane to the analysis computers.

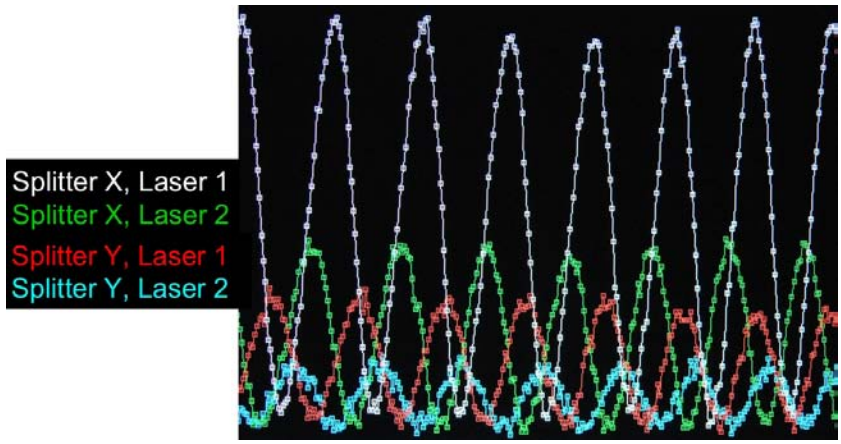

Figure 9: The four sinusoidal $\sim$ pW dual laser signals from two optically switched interferometers, successfully read out at one Avalanche Photodiode on the FROC.

5. FIBRE SPLITTER TREE AND OPTICAL SWITCHES

5.1. Concept

The fibre coupled light from the lasers must be split between the 842 delivery fibres of the on-detector grid line interferometers (GLIs). This will be achieved using a fibre splitter tree (FST) made from commercial bi-conic, fused taper couplers. Samples of couplers which are single mode at 830 m have been obtained from several suppliers and have been evaluated in the prototype FSI system. The specifications guaranteed by the manufacturers appear to meet our requirements. A typical excess loss quoted by several manufacturers is ~ 0.3 dB, for a single 50% coupler. Thus, the ten stages required in the splitter will lead to an overall loss of ~ 3 dB, which is considered acceptable.

The fibre-splitter-tree and read-out electronics will be installed in a 52U rack housed the underground counting room of the ATLAS experiment. High packing density of optical couplers is required to overcome the tight space constraints. It is planned to use a densely packed modular design, similar to that shown in Figure 10, for ease of installation and maintenance, and to simplify the external fibre splice connections.

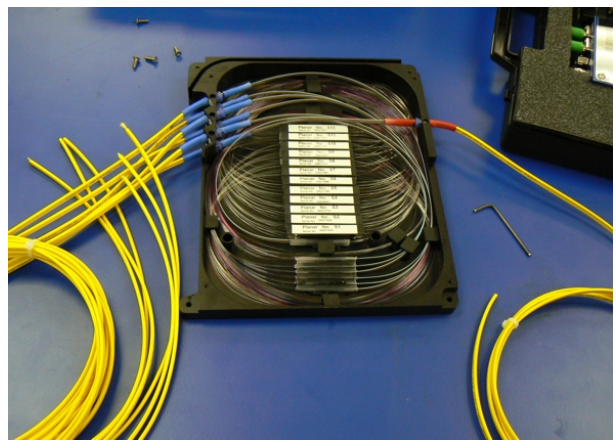

Figure 10: A sample module for the Fibre Splitter Tree.

5.2. Optical Switches

The recent availability of fibre coupled MEMs optical switches for the near infra-red has stimulated investigations into their use as part of the splitter tree. The advantage of using switches over a splitter is a two fold increase in the power reaching each grid line interferometer, at the cost of doubling the time required for one FSI measurement of the complete geodetic grid. However one level of optical switches can be included without suffering from this time detriment, because in any case the read-out system is multiplexed, as described in Section 4. The proposed switching scheme has been experimental validated in the prototype FSI system, as summarised below.

5.3. Demonstration of Optically Switched FSI

An optical switch was used to convey light from the prototype FSI system to the either one of two interferometers of a GLI design. A set of five FSI scans were recorded with the switch in a fixed position, so that the first interferometer length was measured five times. The switch was then driven to oscillate between the two interferometers in synchronisation with the read out system. A further set of five FSI scans were recorded, in which both interferometer lengths were measured simultaneously in each scan. The switch was then fixed to illuminate only the second interferometer and a further five scans were recorded. The procedure was repeated so that a series of 40 such

unswitched and *switched* FSI measurements were recorded over several hours. The standard deviation of each group of 5 measurements was used to estimate the length measurement precision for each set-up, as plotted in Figure 11.

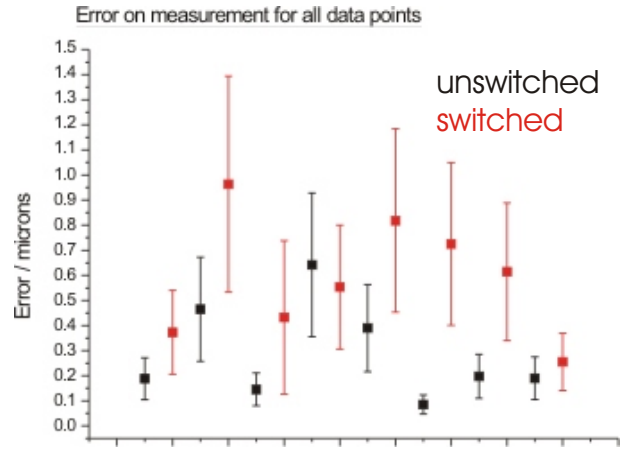

Figure 11: Length measurement precision for unswitched (black) and switched (red) data. Each data point is the single measurement precision estimated from a group of five FSI measurements.

It may be seen from the data that using an active optical switch, FSI measurements could be performed to within the required 1 μm precision. A small loss of the measurement precision was observed. However, it must be noted that this is the worst case scenario, in which the optical power was the same for the switched and unswitched set-ups. In the ATLAS FSI system the use of a switch would double the available power and so improve the signal to noise.

6. CONCLUSION

A geodetic grid of over eight hundred fibre coupled interferometers will be used to remotely monitor micron level deformations of the ATLAS particle tracking detector at CERN. The challenges associated with illuminating and reading out this large scale system have been addressed. An amplified two colour laser system with light characteristics suitable for precise FSI measurements has been presented. The length of a reference interferometer was measured to a precision of $\sigma = 96$ nm with this laser system and the precision will be further improved by multiple subscan linking. A multi-channel read-out system has been developed and shown to be capable of recording of multiplexed pW interferometer signals. FSI measurements using MEMS optical switches have been demonstrated within the required 1 μm length measurement precision. The optical switches provide a cost effective method of doubling the available optical power to the grid lines, to improve the reliability and precision of the measurements.

Acknowledgments

This work was funded by UK PPARC.

References

[1] ATLAS Collaboration, “ATLAS Inner Detector Technical Design Report”, CERN, April 1997.

[2] A. F. Fox-Murphy, D. F. Howell, R. B. Nickerson, A. R. Weidberg, “Frequency scanned interferometry (FSI): the basis of a survey system for ATLAS using fast automated remote interferometry”, Nucl. Instr. Meth. A 383 (1996) 229-237.

[3] P. A. Coe, D. F. Howell, R.B. Nickerson, “Frequency scanning interferometry in ATLAS: remote, multiple, simultaneous and precise distance measurements in a hostile environment”, Meas. Sci. Technol. 2004; 15(11): 2175-2187.

[4] P. A. Coe, A. Mitra, S. M. Gibson, D. F. Howell, R. B. Nickerson, "Frequency Scanning Interferometry - A versatile high precision, multiple distance measurement technique", Proceedings of the Seventh International Workshop on Accelerator Alignment, SPRING8, Japan, Nov. 2002.

[5] S. M. Gibson, P. A. Coe, A. Mitra, D. F. Howell, R. B. Nickerson, "A study of Geodetic Grids for the Continuous, Quasi Real Time Alignment of the ATLAS Semiconductor Tracker", Proceedings of the Seventh International Workshop on Accelerator Alignment, SPRING8, Japan, Nov. 2002.

[6] S.M. Gibson et al, "Monitoring the heart of ATLAS using Frequency Scanning Interferometry", Proceedings of the Eighth International Workshop on Accelerator Alignment, CERN, Geneva, Oct. 2004.

[7] S. M. Gibson, P. A. Coe, A. Mitra, D. F. Howell, R. B. Nickerson, "Coordinate Measurement in 2-D and 3-D Geometries Using Frequency Scanning Interferometry", Optics and Lasers in Engineering, 2005; 43(7): 815-813. Available online 4 October 2004. doi:10.1016/j.optlaseng.2004.09.001

[8] P.A. Coe, "An investigation of Frequency Scanning Interferometry for the alignment of the ATLAS semiconductor tracker", D.Phil. Thesis, Oxford UK, 2001.

[9] S. M. Gibson,"The ATLAS SCT alignment system and a comparative study of misalignment at CDF and ATLAS", D.Phil. Thesis, Oxford UK, 2004.

[10] A. Mitra, "Development of an APD amplifier for the runtime alignment of the ATLAS inner detector and SUSY studies", D.Phil. Thesis, Oxford UK, 2002.