The Status of SSRF Survey and Alignment System

Chenghao. Yu, Hanwen. Du, Lixin. Yin, Ming.Ke, Hao.Guo
SSRF, SINAP, Shanghai, 201800, P. R. China

With energy of 3.5GeV and usual rigid positioning requirement of 3rd generation light source, Measures should be taken to fulfil the requirement of 0.08mm alignment error between adjacent magnets in storage ring. This paper will give a presentation of the whole consideration about alignment plan, data management, and so on. According to the mechanical schedule, a test assembly for both storage ring and booster is finished. By this way, alignment design is validated and refined. The building is almost ready for accelerator components installation for the moment and control network measurement is doing now. In the last part the result and measures to improve the accuracy of control network are introduced.

1. INTRODUCTION

Shanghai Synchrotron Radiation Facility (SSRF), a biggest scientific project ever in China, located in Pudong new district, Shanghai, is a 3rd-generation light source with energy of 3.5GeV, The ground-breaking of building and formal startup is performed on 8 December, 2004. The whole facility is composed of 20m-long LINAC, low energy transport line, 180m-circumference booster, high energy transport line, 432m-circumference storage ring and 7 beam lines in the first period (see figure 1). It is scheduled to be finished at April, 2009.

In the long run of design and preparation period for survey and alignment, all the work concerned is considered such as control network, magnet fiducialization and rafting out of the tunnel etc. For the time being, alignment instruments are investigated and purchased; fixtures and magnet fiducials are designed and manufactured; necessaries to give facilities to incoming measurement are prepared.

In the several recent months, standard cell of booster and storage ring are assembled to verify hardware design. According to the result, survey and alignment design are validated and refined too.

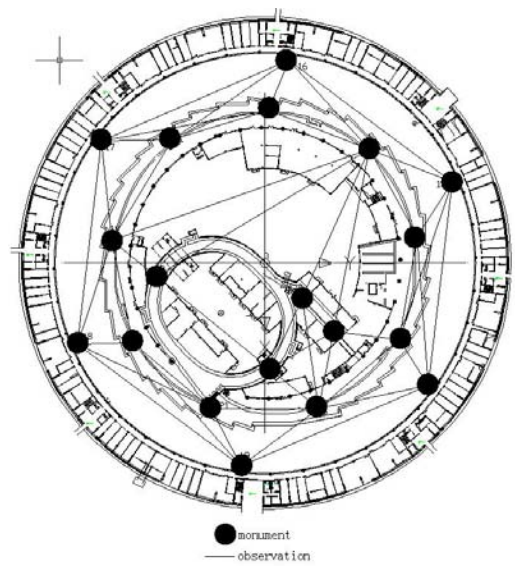

Figure 1: SSRF layout & global control network

The building will be available for accelerator installation in October, 2006, and some key components are ready for installation, so survey and installation is an urgent work confronted with. The control network is built in tunnel and measured for the first time.

2. THE PRINCIPLE DESIGN

2.1. Main Consideration

First of all, the design and implement of survey and alignment should fulfil the error tolerance from accelerator physics. For the complexity of the facility, Survey and alignment is separated into several intermediate steps and each will contribute to the final alignment quality. The design should consider all possible error sources for each step and set a maximum limit which shouldn't be exceeded at any situation.

Another thing that should be considered is that modern, available techniques should be probed to ensure the final positioning accuracy, and special attention should be paid to ensure the measure efficiency and repeatability. For efficiency, redundant procedure will be omitted based on the simulation installation without reducing the reliability. A practical and fitting schedule will do much help.

The last but not the less important, for consideration of precise measurement, calibration, instrument maintenance and correct operation should be regulated and obeyed strictly; all the fixture and adapter will be uniformed, and the ambient condition should be in control.

2.2. Error Budget

According to particle dynamics, accelerator physics group give the alignment tolerance. The relative misalignment error of adjacent quadruple magnets in storage ring should be less than 0.08mm; the circumference installation error of storage ring should be less than 10mm, 1~2mm expected, and the measure error of it should be less than 1mm.The relative misalignment error of storage ring magnets in a common girder is listed in table 1 as an example.

Table1: Storage Ring Magnet Tolerance in girder

Magnet	Quadruple	Sixtupole	Corrector
ΔX(mm)	0.08	0.08	0.2
ΔY(mm)	0.08	0.08	0.2
ΔZ(mm)	0.3	0.3	0.3
Δθ X(mrad)	0.2	0.3	0.5
Δθ Y(mrad)	0.2	0.3	0.5
Δθ Z(mrad)	0.2	0.2	0.2

According to the installation plan, survey and alignment can be classified as 5 steps (see figure 2). Control network is for the aim of control in large scale, which will provide a reference coordinate frame for installation on site and ensure the installation error of circumference; Fiducialization will get the position relation between magnet centre and fiducials; after pre-alignment the relative position among quadruple, sixtupole in a girder will be positioned precisely, which will decrease the work time in tunnel. Smoothing will make sure the beam orbit as smooth as possible, which has much more meaning to beam.

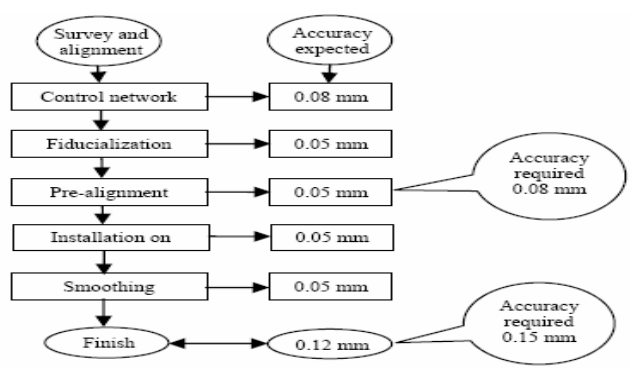

Figure 2: Error budget

Based on the experience of other accelerators and the test have done, the expected accuracy of each step can be estimated as shown in figure 2. According to error propagation rule, the accuracy before smoothing can be calculated as $\sqrt{0.08^2+0.05^2+0.05^2+0.05^2}=0.12\text{mm}$, within the tolerance. After smoothing, the relative relation may be more accurate.

The circumference measurement accuracy depends on distance measurement accuracy mainly, so laser tracker is an ideal tool for this purpose because of its interferometer. The roll error will be assured by inclinometer.

2.3. Instrumentation

After comparing and consultation, laser tracker is selected as the main instrument for most of the work. Laser tracker is rapid, 3D measure instrument, a little expensive, but with two remarkable merits: the interferometer gives very precise range measurement and the tracking makes the low efficient sighting and centring unnecessary any more. In a word, the accuracy and efficiency is matching together. The specification is about 0.005 mm/m (2 σ) for latest system.

For SSRF, laser tracker will be used almost in all survey and alignment steps. The transfer error between measure devices will be eliminated, and data acquisition, processing, and management will be very convenient. The only difficulty is that there should be 3~4 ones to work together because of the almost simultaneously requirement by fiducialization, pre-alignment and installation on site.

Nivel20 will be chosen as the main electronic inclinometer which can measure the two dimensional tilt. Level N3, NA3003 and NA2 are for the purpose of coarse positioning and deformation monitoring. Total Station TDM5005 and plummet NL are used mainly for global control network measurement.

Because of the cost of HLS, it will be used for monitoring uneven settlement of tunnel as a test in phase 1; further application will be recording the real time position change and directing the real time adjustment mechanism in phase 2 (after the year of 2009).

3. THE DETAIL DESIGN

3.1. Control Network

Control network is classified as global and local ones, which is described in last workshop [2]. Here it's a brief review.

3.1.1. Global network

The global network is used as the global control with 19 points buried on the floor (see figure 3). The height of sighting line is 7.4m relative the floor. For horizontal surveying, there is a hole (Φ200mm) on the top of each point in the tunnel roof for centring. A movable glass window will appear where the line of sight may be obstructed. Those points are carefully chosen to minimize obstruction from architecture and devices.

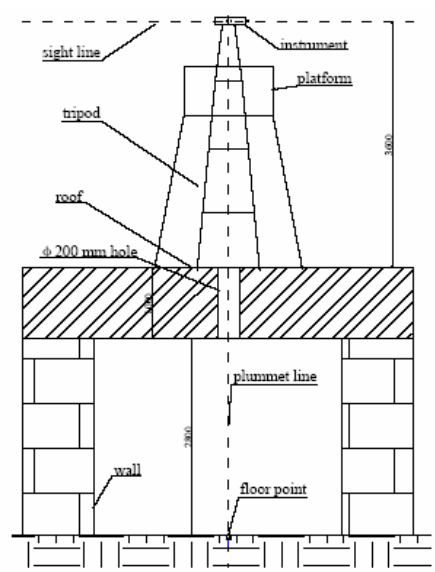

Figure 3: Global control network plummeting

The horizontal observation elements are angles and distances from Total Station. NASEW95 will be used for the calculation according to free net adjusting principle. From a conservative accuracy estimation of 0.5mm for distance, and 2 arc second for angle, the maximum absolute point error is ±0. 243mm and the maximum error between points is ±0. 335mm.

The elevation network is measured directly on the tunnel floor

by Level. These points and the local floor points are mixed up to form a uniform elevation network. There are two functions of the elevation network: to provide a datum for the vertical positioning; to monitor the differential settlement of the tunnel floor.

3.1.2. Local Network

According to the layout of accelerator, the control network is classified as the network of LINAC, Booster, Storage Ring, and experimental hall. The monuments are scattered almost in the whole space of SSRF with the number of about 700.

The main instrument is laser tracker. At each station, Laser Tracker measures the points around it by reading the distance, horizontal angle, and vertical angle simultaneously. Set-up a Laser Tracker station, measure all of the points closer than 12m around the instrument Then move to another station in the span of 6m, measure all of the points as previous station. In this way there should be many re-measured points among stations, which can be utilized to establish the station relationship. All of the control points can exist in a uniform coordinate system, and then the control network is built up, with an expected accuracy of 0.08mm..

3.2. Fiducialization

For magnets, the typical ficucials are two types: fixtures for nesting the reflector of laser tracker and plate for inclinometer. The 4 fixtures on top should locate in symmetry around centre line to counteract the heat-expanding effect. By the way, in order to give facilities to fiducialization, special grooves on lamination of magnet will be preserved. (see figure 4).

For quadruple and sixtupole, the fiducialization process is as follows: firstly, measure the rotation centre of rotation measurement coil by special fixture and corner cube reflector of laser tracker, then compensate the bias between magnetic field centre and rotation centre. The final datum coordinates are presented in magnet field frame, which is required by accelerator physics.

For bending magnet, because of the magnet field uniformity, the geometry and field centre can be considered coincidence, so the procedure is much simple. In order to get the real status, the difference between electrified and non-electrified will be measurement, and the rotation angle of reference plate should base on electrified status.

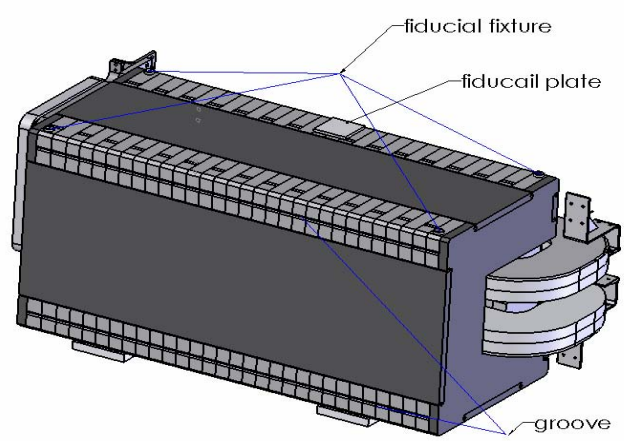

Figure 4: Magnet fiducials

3.3. Pre-alignment

There will be a working platform for pre-alignment in the vacant part of experimental hall. The crane, girder, magnets, adjusting tools and so on, should be ready beforehand.

There are many factors that affect the accuracy of this procedure such as temperature, the change of ground and instrument, the shake of crane, the adjust sensibility and so on. Special test and detailed regulation should be established and carried out in actual operation.

When pre-alignment, girder is levelled at first, then magnets are put on it and set laser tracker (see figure 5). Laser tracker measures and directs the adjustment of each magnet. As the display shows the changes real time, adjust will be very convenient. The difference between nominal and actual shouldn't be large than 0.03mm at the worst situation. When deviation is within tolerance, the assembly will be transported to tunnel or other temporary place for installation on site.

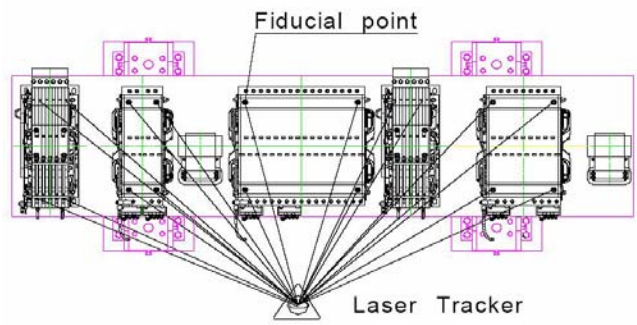

Figure 5: Pre-alignment sketch

3.4. Installation on site

There are several continuous steps. Let's take storage ring as example to elaborate the procedure:

1) According to the control network, the beam centre-line and magnet entrance and exit should be marked on floor.
2) The cement frusta should be aligned in 1~2 mm. When measure and check is ok, the frusta and floor will be bonded together. There will be datum holes on top of the frusta for precise set out.
3) Girders are transported to tunnel and positioned on frusta.
4) Setup laser tracker around the girder and measure adjacent control network points, then adjust girder position referring to the reading. The relative position of magnets will be checked too.
5) Dismantle the upper part of all the magnets, position and align the vacuum chamber. When the status of vacuum is ok, then assembly the upper parts of magnets. Bending magnets are put into its position and aligned.

3.5. Smoothing

When all elements are positioned, before commissioning, all adjacent quadruple will be re-measured to ensure relative position not exceeding tolerance. The position of other elements will be checked too.

4. THE WORK BEING DONE AND GOING ON

4.1. Manufacturing and purchasing

All the fiducials and fixtures are manufactured according to design. There are about 7 kinds of fiducials for magnets and adjusting mechanism, supports etc (see figure 6). The total

Figure 6: Example of a fixture

quantity is about several thousands, and cost is about 600,000 RMB.

Level, laser tracker an articulated arm and many fixtures are newly purchased to fulfil the requirement.

4.2. Test Assembly

For the aim of verifying design and finding some underlying questions, the prototype of all kind of hardware is assembled together which includes frusta, girder, magnet, cables and so on (see figure 7). As a result, some questions are found and corrected for mass production.

Figure 7: Test assembly

Because of the high requirement to reducing the effect of vibration, girder and magnet must keep good connection and there shouldn't be any adjusting mechanism between them, which cause much problem for alignment. It's an emphasis and difficulty of the work following.

4.3. Point Burying

As the tunnel is almost finished, survey monuments are buried. For LINAC and booster, all of the monuments are in position, and fixed toughly (see figure 8), but for storage ring, only wall and floor monuments are buried because of no roof.

Figure 8: Wall and floor monument

While burying, two rules are regulated: the floor points shouldn't be higher than floor; and the wall points shouldn't be titled referring to the wall.

4.4. Control Network Measurement and Calculation

When monuments are stable enough, platform for observer and supports for instrument are ready, we take global control network measurement for the first time.

As the roof of storage ring isn't ready now, we use supports grounded from the floor. That is, the height of supports for the 9 points of storage ring is about 7m, which causes trouble we never expected: Unstable status of instrument, lower accuracy etc.

It takes about four days for measurement by two groups, repeatability check and re-measurement included. For the worse situation of supports, many angle measurements are omitted. Least square adjustment is done by combination of

all the distance measurements and few angles. Two software named “NASEW95” and “SURVEY” are used for cross-check. Both software shows that relative point error is about 1~2mm (see figure 9), which is much lower than expected. Supports with more stable performance are being made to improve the accuracy, and the global control network will be measured again.

At the same time, level measurement for 3 tunnel floor and monuments are doing. And laser tracker for local network is measuring for the first time too. But the result isn’t ready for the paper.

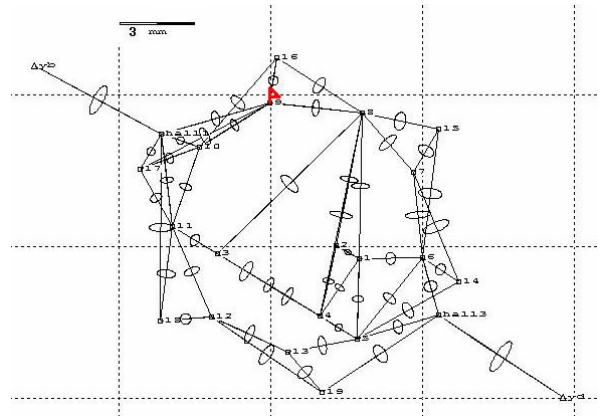

Figure 9: Point absolute error ellipse

5. CONCLUSION

For the reason of new commence of implementation, the result isn’t talk much. As you can see, real challenge for survey and alignment is coming in the near future.

Acknowledgments

About 8 years ago, the survey and alignment design of SSRF was started. But there is some discontinuousness for the design in the long design time span, which causes some problem. The experiences from previous and on-going accelerator construction aroused us much inspiration, the specialists overseas and home gave many suggestions, special thanks should give them, Fuqiang Wei (SLS), Chao Zhang (Spring-8), Kaixi Huang (BEPC),Lan Dong (BEPC), Kaidi Man (IMP), Xiaoye He (HLS) and so on.

References

[1] Hongjie Xu et al.： The Preliminary Design of SSRF, 2004.11.

[2] Chenghao Yu, Hanwen Du, Lixin Yin. The Control Network Design of SSRF. http://iwaa2004.web.cern.ch/IWAA2004/subsite/PDF/20041005_TS03-4_Chenghao-Yu.pdf.