Induced Signal in RPC

C. Lu
Princeton University, Princeton, NJ 08544, USA

The RPC technology has been adopted by many present and future high energy physics experiments. They are mainly used for the muon ID and/or calorimeter. To design the electronics readout system for RPC, we need to understand the characteristic of the induced signal in RPC. In this paper I will discuss the following aspects of the RPC signal: the charge spectrum, the ratio of the induced charge to the total charge flowing through the RPC, the pulse shape of the signal, the induced charge spread on the pickup plane. The comparison between the analytical calculation and my test results shows that the presented formulae can be used as a decent model when people designing the readout system for RPC.

1. CHARGE SPECTRUM OF RPC INDUCED SIGNAL

We start from the most basic charge spectrum study of the RPC induced signal. The test setup is shown in figure 1.

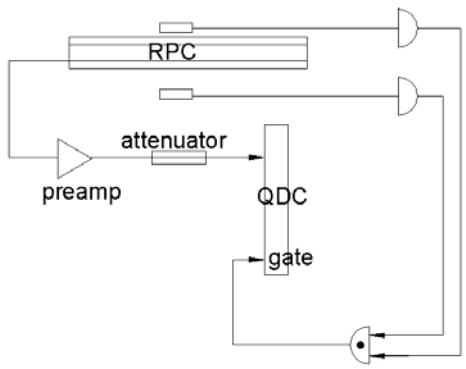

Figure 1. Charge spectrum test setup.

It uses a scintillator telescope to select the cosmic ray event. The width of the gate is 1μs. A typical avalanche signal charge spectrum is shown in figure 2, together with its Polya distribution fitting curve.

$$Polya-distribution: Q = a(\frac{b}{c}x)^{b-1} e^{-(\frac{b}{c}x)}$$

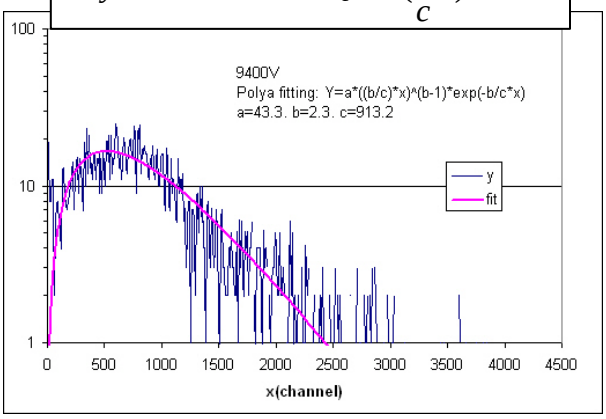

Figure 2. Typical avalanche signal charge spectrum and its Polya fitting curve.

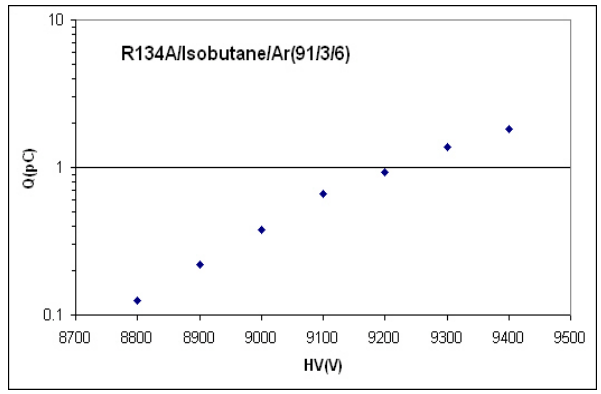

Figure 3. Mean charge of the avalanche signal at different high voltage.

Figure 3 shows that the avalanche enters saturated mode when the mean charge of the induced avalanche signal reaches ~1pC.

We also measured the streamer signal charge spectrum with the same RPC. Since the streamer signal is much larger than avalanche one, for this test we removed the preamplifier, let the QDC module direct take the signal from the strips. A typical streamer charge spectrum is shown in figure 4. The peak of the spectrum is around 250pC. At 9400V the mean charge of the induced avalanche signal is ~1.8pC, which is ~1/140 of streamer induced charge.

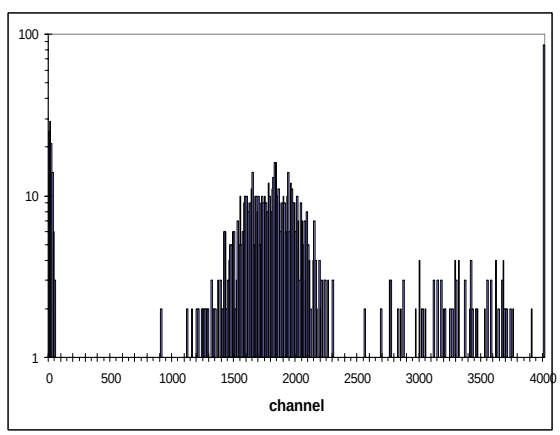

Figure 4. Typical streamer signal charge

2. RATIO OF THE INDUCED SIGNAL CHARGE TO THE TOTAL DRAWN CHARGE

We also direct measured the total drawn current in the RPC chamber (the ohmic DC current has been subtracted). As shown in figure 5, comparing the last point, where we typically operate the chamber, of each curve we found the ratio of the dark currents in avalanche/streamer mode is not 1/140, it is only ~ 1/4!

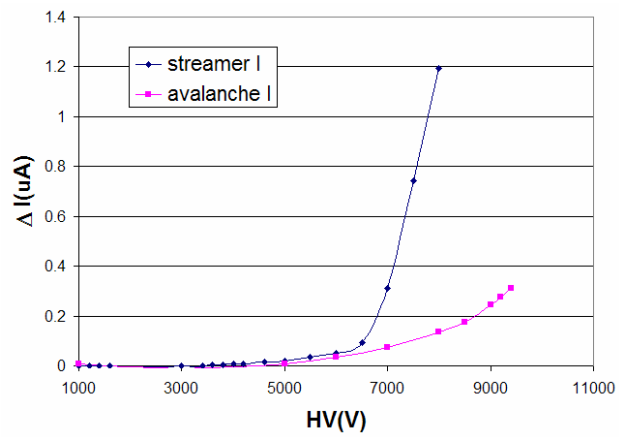

Figure 5. Total drawn current cross the RPC in avalanche and streamer mode.

2.1. Induced charge in avalanche mode

Figure 6 illustrates an avalanche development in the RPC gap.

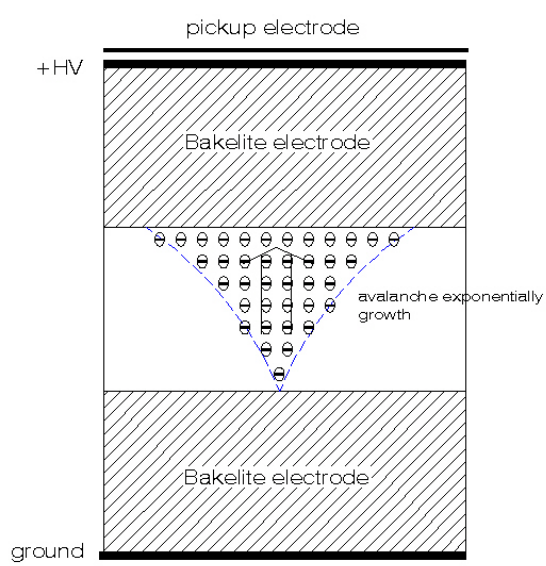

Figure 6. Illustration of an avalanche in RPC gap.

- The movement of the charge in the electric field induces a current signal on the pickup electrode;
- The positive/negative ions are moving very slowly, in the scope of our electronics, we can neglect them;
- According to Ramo's theorem [1]:

$$i(t) = \frac{E_w}{V_w} v e_0 N(t) \qquad (1)$$

where e_0 is the electrons charge, $N(t)$ is the number of electrons presented at time t, v is the electron drift velocity, E_w (weighting field) is the electric field in the gap if we set the pickup electrode to V_w and ground all other electrodes. Refer to figure 7, the weighting field can be easily derived: Assume d1=b, d2=d, d3=b, and $\varepsilon_1=\varepsilon_3=\varepsilon$, $\varepsilon_2=1$, to satisfy the following condition

$$\sum_{i=1}^{3} E_i d_i = V_w, \varepsilon_i E_i = \varepsilon_j E_j$$

we derive the following weighting field:

$$\frac{E_w}{V_w} = \frac{\varepsilon}{2b + d\varepsilon} \qquad (2)$$

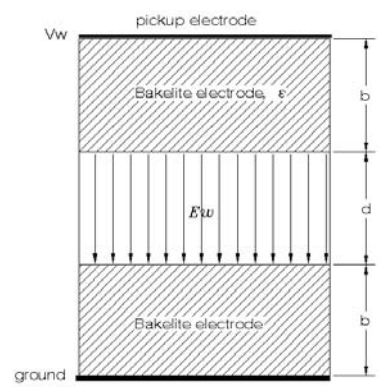

Figure 7. Weighting field in RPC gap.

Assume:

- A single electron initially is at distance x from the cathode;
- Ideal Townsend avalanche – exponential growth with the drifting path length;

The induced current:

$$i(t,x) = \frac{E_w}{V_w} e_0 v e^{(\alpha-\eta)vt} \Theta\left(\frac{d-x}{v} - t\right)$$

where $\Theta(x)$ is the step function, it indicates when the electrons reach bakelite surface the induced current suddenly stopped, the induced charge is:

$$Q^{ind}(d-x) = \int_0^{\infty} i(t,x)dt = \left[\frac{E_w}{V_w(\alpha-\eta)}\right] e_0 (e^{(\alpha-\eta)(d-x)} - 1) \qquad (3)$$

We already know the weighting potential:

$$\frac{E_w}{V_w} = \frac{\varepsilon}{2b + d\varepsilon}$$

The total charge reaches anode is

$$Q_{total} = e_0(e^{(\alpha-\eta)(d-x)} - 1)$$

$$Q_{ind} / Q_{total} : \quad \frac{\varepsilon}{(2b+d\varepsilon)(\alpha-\eta)} \qquad (4)$$

Enter the typical values: $\varepsilon \sim 8$, $b = d = 0.2cm$, $\alpha - \eta \sim 100$ into the above formula, we obtain $Q_{ind} / Q_{total} = 0.04$.

2.2. Induced charge in streamer mode

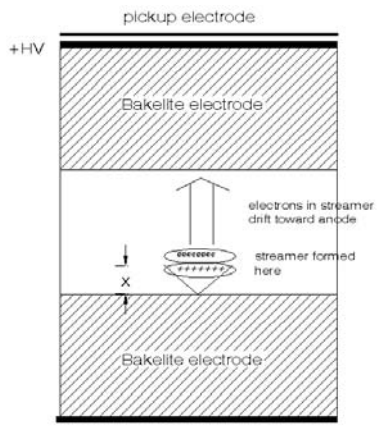

Figure 8. Illustration of streamer induced signal.

Assume a streamer is formed at distance x from the cathode, ignore the induced charge during the streamer forming period, the total charge in the streamer is e_0N_0, the induced current:

$$i(t) = \frac{E_w}{V_w} v e_0 N_0 \Theta(\frac{d-x}{v} - t) \qquad (5)$$

$$Q^{ind}(d-x) = \int_0^\infty i(t,x)dt = \left[\frac{E_w}{V_w}\right] e_0 N_0 (d-x) \qquad (6)$$

Replacing

$$\frac{E_w}{V_w} = \frac{\varepsilon}{2b+d\varepsilon}$$

we derive at

$$Q^{ind}(d-x) = \frac{(d-x)\varepsilon}{2b+d\varepsilon} e_0 N_0 \qquad (7)$$

Enter the typical values: d=0.2cm, x=0.05cm, b=0.2cm, ε=8, we obtain the ratio:

$$Q^{ind} / Q^{total} = \frac{(d-x)\varepsilon}{2b+d\varepsilon} \approx 0.6 \qquad (8)$$

In streamer mode the induced charge is ~ 60% of the total charge. In the case of x~0.0cm, ratio will reach the maximum:

$$Q^{ind} / Q^{total} \rightarrow \frac{d\varepsilon}{2b+d\varepsilon} = 0.8 \qquad (9)$$

2.3. Test results for avalanche mode

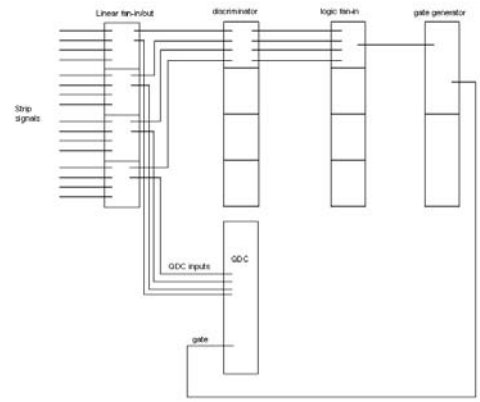

Figure 9. Induced signal test setup.

We test a BaBar endcap RPC in avalanche mode with the arrangement shown in figure 9. The self-triggering scheme records all avalanche signals passing the threshold, at the same time we also record the single's rate and DC current drawn from HV supply. The later is the total current flowing through the RPC chamber I_{total}; by multiplying the frequency and average charge per signal we can get the induced current $I_{induced}$. The test results are summarized in table 1 and figure 10.

Table 1. Ratio of induced charge to total drawn charge in avalanche mode.

HV(V)	Ratio($I_{induced}/I_{total}$)
9000	0.029
9100	0.032
9200	0.037
9300	0.037

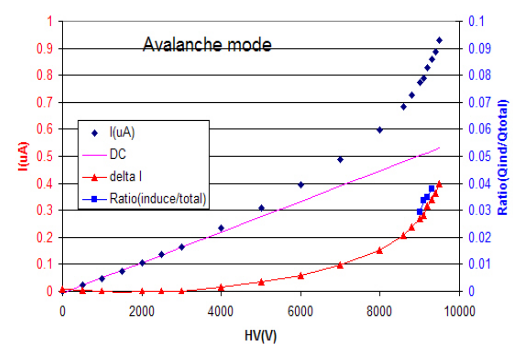

Figure10. Total induced current delta I (DC ohmic current has been subtracted), and the ratio of induced current to total current.

It is consistent with the previous derived value 0.04.

2.4. Test results for streamer mode

The test results for the ratio of $Q_{induced}/Q_{total}$ in streamer mode are shown in figure 11. The ratio increases with HV, it indicates that higher HV forms the streamer earlier, therefore the induced charge is larger. The ratio approaches ~0.6 at the higher end of the operation range that is consistent with our previous derivation.

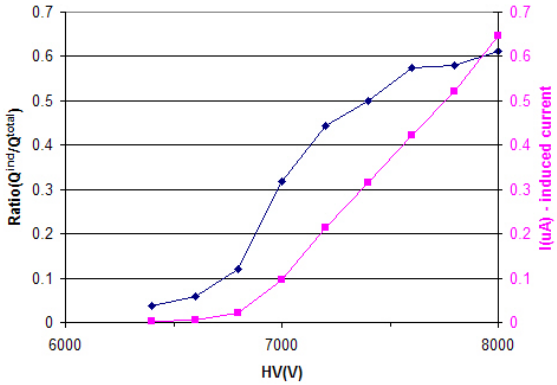

Figure11. Induced current and the ratio of induced charge to the total charge in streamer mode.

3. PULSE SHAPE OF THE AVALANCHE SIGNAL

3.1. Formulation of the pulse shape

In the previous mentioned paper "Detector physics and simulation of resistive plate chambers"[1], the authors give description of how the induced signal formed in the RPC chamber in great detail. They have derived an analytical formula for an induced avalanche signal shape as a function of the time.

If the gas gap is larger compared to the average distance between clusters, the signal will be formed by many clusters. For simplicity we assume N_0 = d/l clusters distributed evenly in the gas gap, each containing n_{av} electrons (d is the gas gap, l is the average distance between clusters). The signal is

$$I(t) = \frac{E_w}{V_w} v e_0 N(t)$$

$$N(t) = \sum_{n=1}^{N_0} n_{av} e^{(\alpha-\eta)vt} \Theta[\frac{d}{v}(1-\frac{n}{N_0})-t] \qquad (10)$$

$$\Theta(z) = \begin{cases} 1, if\,(z>0) \\ 0, if\,(z \le 0) \end{cases}$$

The enveloping function of this signal is:

$$N_{env}(t) = N_0 n_{av}(1-\frac{tv}{d}) e^{(\alpha-\eta)vt} \Theta(\frac{d}{v}-t) \qquad (11)$$

Calculated curves from Eq. 10 and 11 are shown in figure 12.

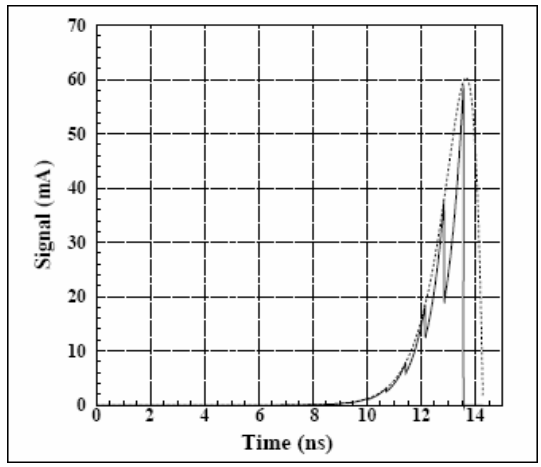

Figure 12. Average signal I(t) with N_0 individual clusters (solid line) and their enveloping function (dash line).

3.2. Measured avalanche signal with linear amplifier

The predicted pulse shape has ~5-10ns rising leading edge, and an abrupt falling edge. We use ORTEC linear amplifier VT120 (amplification x200) to look at the RPC signal:

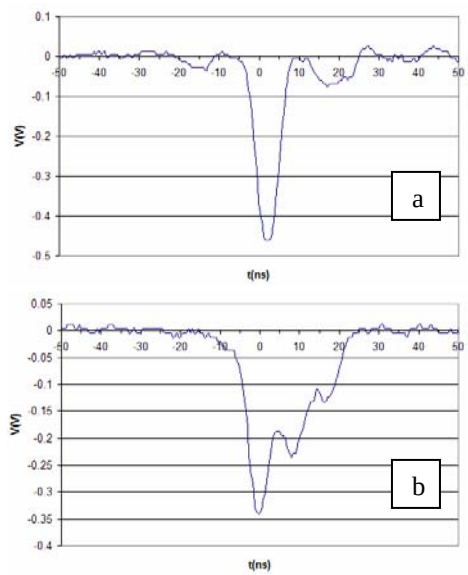

Figure 13. Scope recorded avalanche signals.

Since the strip line is not terminated with its characteristic impedance (~10Ω), we can clearly see the reflection signals on the pulse falling edge. The unique predicted sharp abrupt falling edge can be seen in figure 13(a) but it is overlapped by the reflection signals in figure 13(b).

4. INDUCED SIGNAL DISTRIBUTION ON THE PICKUP PLANE

4.1. General formulae

To calculate the induced charge distribution on the strip/pad plane, consider a simplified model [2] as shown in figure 14:

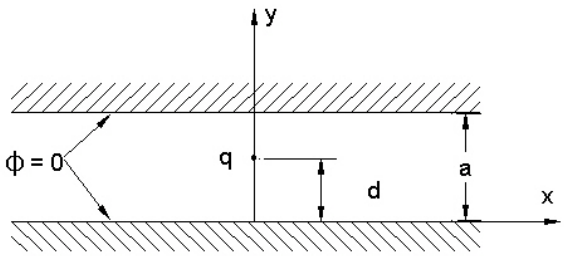

Figure 14. Model to calculate the induced signal distribution on the pickup plane.

The potential $\Phi(x,y)$ in the gap can be expressed as following:

$$\Phi(x,y) = 4q\sum_n \frac{1}{n}\sin\frac{n\pi d}{a}\sin\frac{n\pi y}{a}\exp(\mp n\pi x/a) \qquad (12)$$

We are interested in deriving the induced charge on the surface (y = 0), that is

$$\sigma(x) = \frac{1}{4\pi}E_y(y=0) = -\frac{1}{4\pi}\frac{\partial\Phi}{\partial y}(y=0) \qquad (13)$$

so

$$\sigma(x) = -\frac{q}{a}\sum_n \sin\frac{n\pi d}{a}e^{\mp\frac{n\pi x}{a}} \qquad (13)$$

For summing this series we need play the following trick:

$$e^{\mp\frac{n\pi x}{a}}\sin\frac{n\pi d}{a} = \mathrm{Im}\, e^{\frac{in\pi d}{a}}e^{\mp\frac{n\pi x}{a}} = \mathrm{Im}[e^{\frac{i\pi d}{a}\mp\frac{\pi x}{a}}]^n$$

Let

$$z = e^{\frac{i\pi d}{a}\mp\frac{\pi x}{a}}$$

use

$$\mathrm{Im}\sum_n Z^n = \mathrm{Im}(\frac{1}{1-z})$$

$$\frac{1}{1-z} = \frac{1}{1-e^{\frac{i\pi d}{a}}e^{\frac{\mp\pi x}{a}}} = \frac{1-e^{\frac{-i\pi d}{a}}e^{\frac{\mp\pi x}{a}}}{1-2\cos\frac{\pi d}{a}e^{\frac{\mp\pi x}{a}}+e^{\frac{\mp 2\pi x}{a}}}$$

therefore

$$\mathrm{Im}\frac{1}{1-z} = \frac{\sin\frac{\pi d}{a}}{2(\cosh\frac{\pi x}{a}-\cos\frac{\pi d}{a})}$$

Finally we obtain the induced charge density distribution:

$$\sigma(x) = \frac{-q}{2a}\frac{\sin\frac{\pi d}{a}}{\cosh\frac{\pi x}{a}-\cos\frac{\pi d}{a}} \qquad (14)$$

4.2. Compare to ANSYS FEA calculation

The validity of this analytical formula can be checked with ANSYS Finite Element Analysis calculation. Calculate a 6-mm gas gap with the charge density q at the gap center, the induced charge distributions on the electrode are almost identical to the analytical formula:

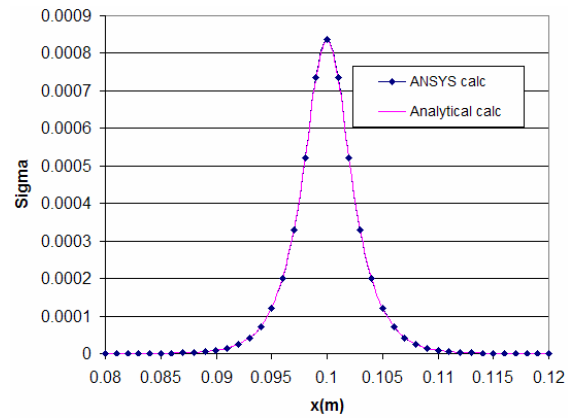

Figure15. FEA calculated induced charge distribution.

We also set charge q at three different locations in the gap: top, center and bottom (they are normalized to the same peak height), the results are shown in figure 16.

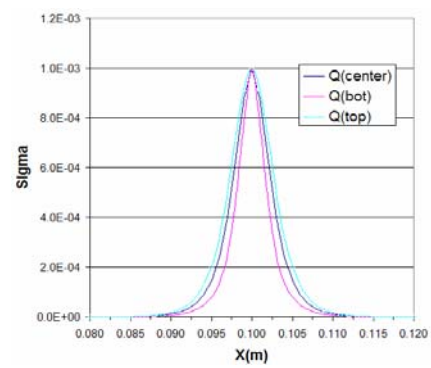

Figure 16. Variation of the induced charge distribution with charge q at three different locations.

We can see that the distribution width varies with the location of the charge, but the variation is small.

We also use ANSYS to calculate RPC gap (two 2-mm bakelite plates sandwiched a 2-mm gas gap), and compared it with a 6-mm gas gap case as shown in figure 17, the RPC gap distribution is slightly narrower.

To summarize the previous discussion, we can say that the intrinsic induced charge distribution is small, most is concentrated within 1cm area.

4.3. Other considerations

According to this the multiplicity of RPC pad readout should be 1~2, but in reality, this is not always true. What else would affect the multiplicity? One

additional consideration is induced charge distribution could be smeared by graphite coating. Between RPC

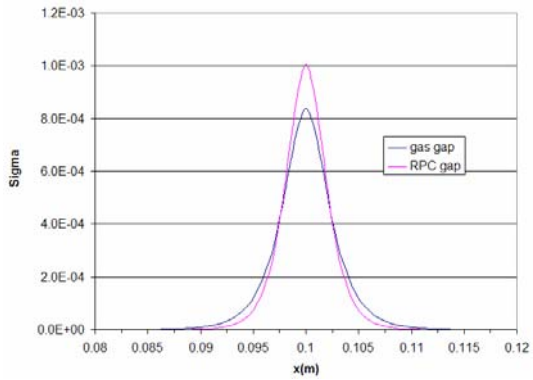

Figure 17. Induced charge distribution in the RPC gap.

gap and the pickup strip/pad plane there is a graphite coating layer, depend upon the resistivity of this coating layer, the distribution of the induced charge on the pickup plane would be smeared.

As shown in figure 18, start from radius r, increases dr to r+dr, the ring's resistance will be:

$$dR = \frac{\sigma}{2\pi}\ln(\frac{r+dr}{r}) \approx \frac{\sigma}{2\pi}\frac{dr}{r}$$

The ring's capacitance to the strip plane is:

$$dC = \varepsilon \bullet 2\pi r dr / t$$

$$dRdC = \frac{\sigma\varepsilon}{t} drdr$$

The time constant for this mechanism is $\varepsilon s/t$. Assume $s=100k\Omega/\square$ (BaBar RPC), $\varepsilon=8.85\times10^{-14}F/cm$, t (Mylar film thickness)=0.01cm, $s\varepsilon/t$~0.89μs. If we open the gate for more than 1μs, more neighbor strips/pads would be fired.

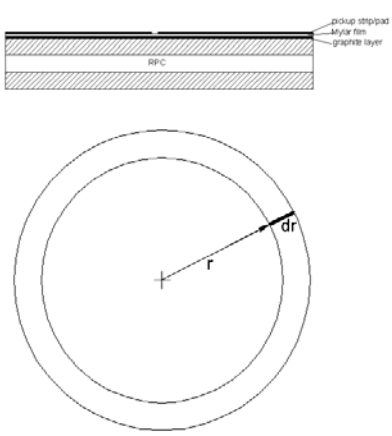

Figure 18. Model to calculate induced charge smearing effect.

5. SUMMARY

- At the average induced signal charge ~1-2pC the avalanche enters the saturated mode;
- The induced charge is only ~4% of total charge drawn in an avalanche RPC; ~60% in streamer RPC;
- The intrinsic avalanche induced signal spread range is R~1cm, but in a real RPC chamber, the multiplicity also depends upon the graphite coating resistivity. Lower resistivity would smear the induced signal to larger area, cause higher multiplicity;
- The RPC signal is fast, its leading edge has ~ 5-10ns rising time, and has a rather abrupt falling edge.

Acknowledgment

I would like to thank K. McDonald for letting me to use his lecture notes.

References

[1] Werner Riegler, Christian Lippmann, Rob Veenhof, NIM A500(2003)144

[2] K. McDonald, Princeton physics lecture notes, http://puhep1.princeton.edu/~mcdonald/examples/ph501lecture4/ph501lecture4.pdf , pp. 46-48